FIG.1

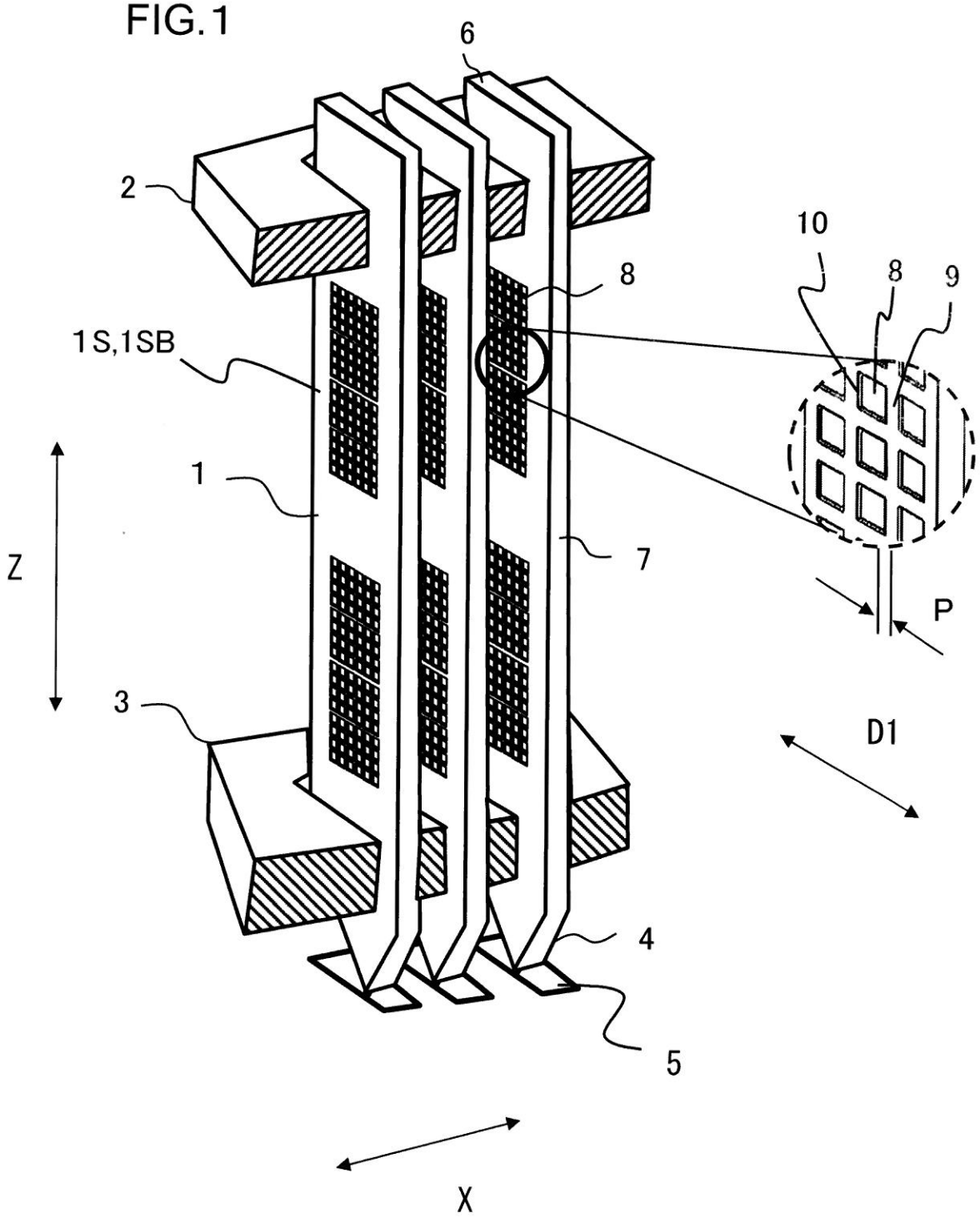

FIG.2

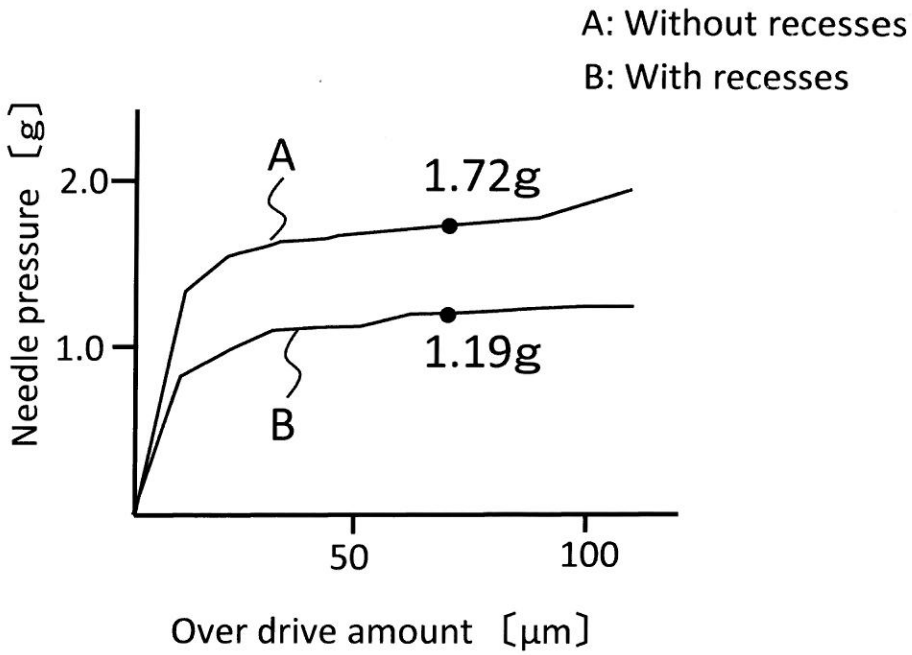
A: Without recesses
B: With recesses
Needle pressure 〔g〕
2.0
1.0
A
B
1.72g
1.19g
50
100
Over drive amount 〔μm〕

FIG.3

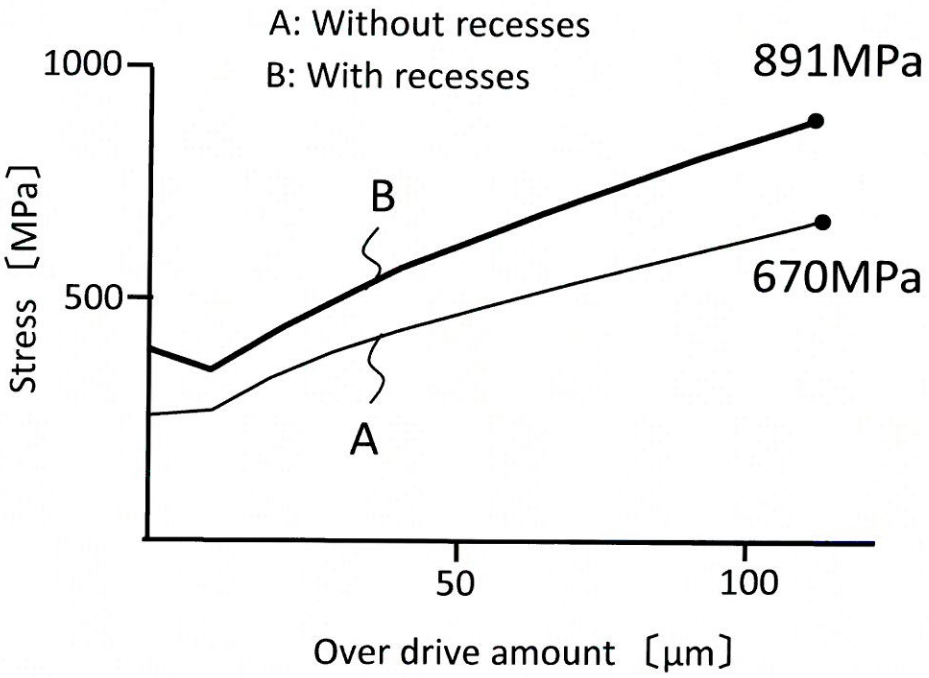
A: Without recesses
B: With recesses
1000
500
Stress 〔MPa〕
891MPa
670MPa
B
A
50
100
Over drive amount 〔μm〕

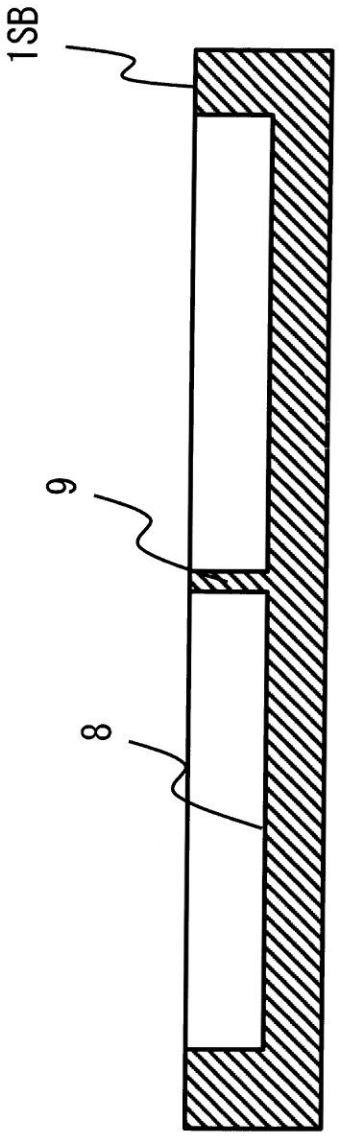

FIG.4

FIG.5A

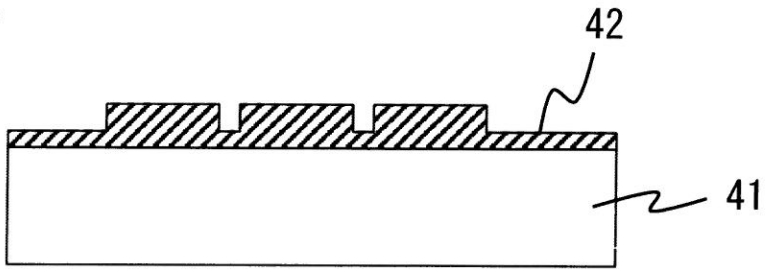

FIG.5B

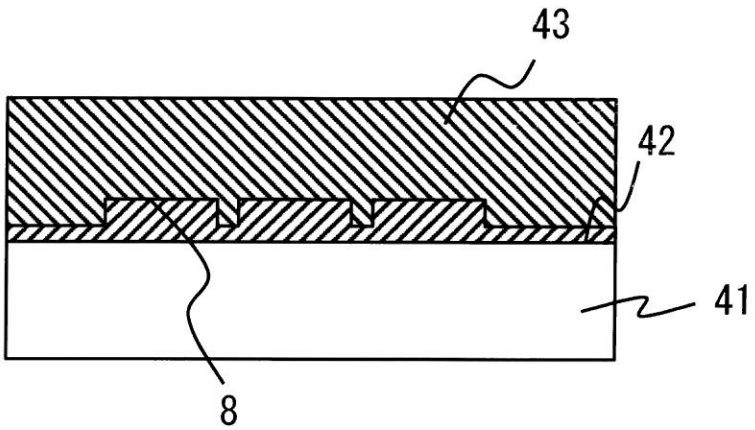

FIG.6

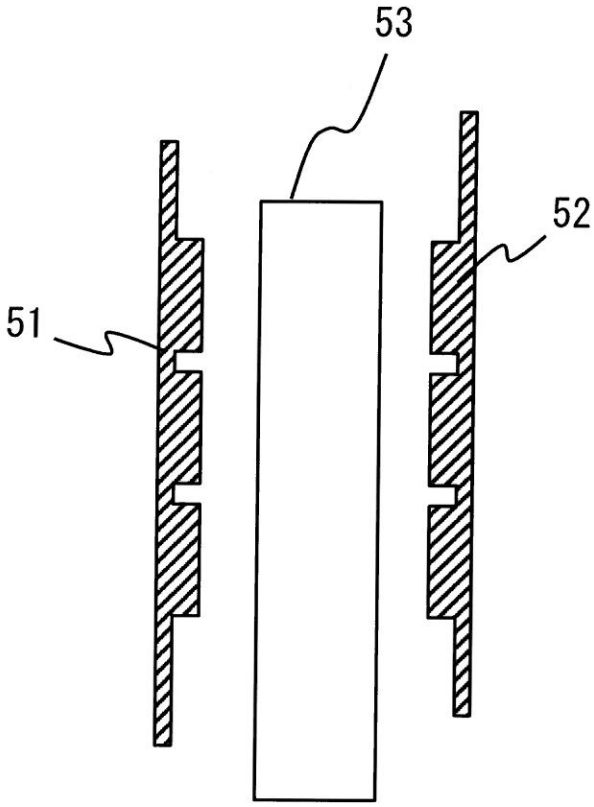

FIG.7

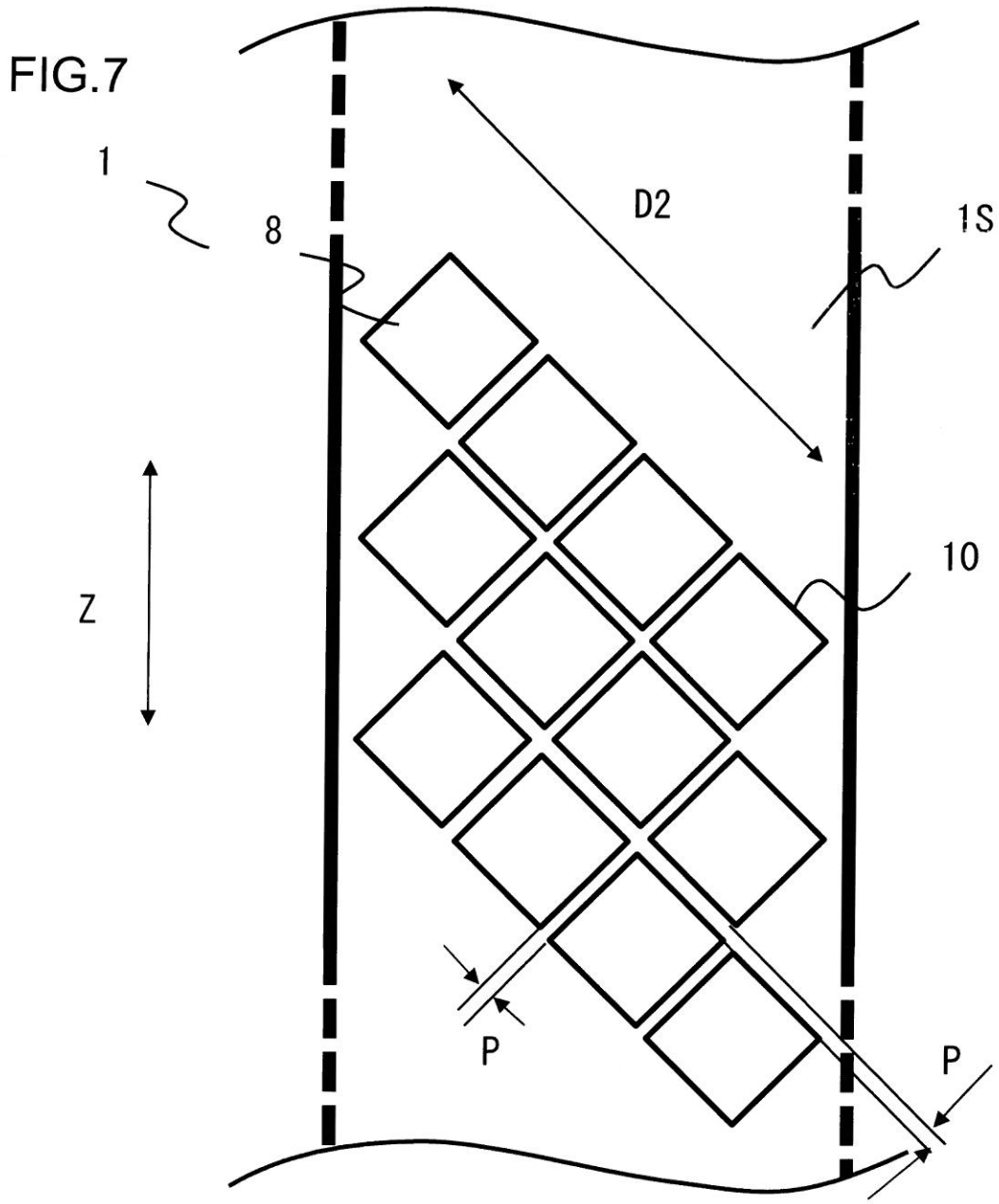

FIG.8

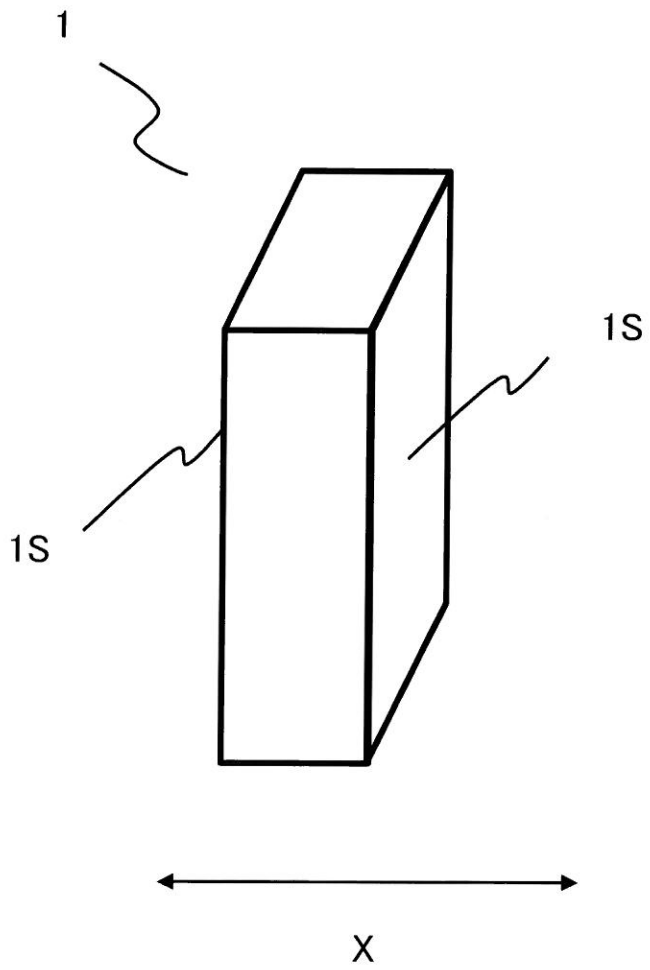

FIG.9

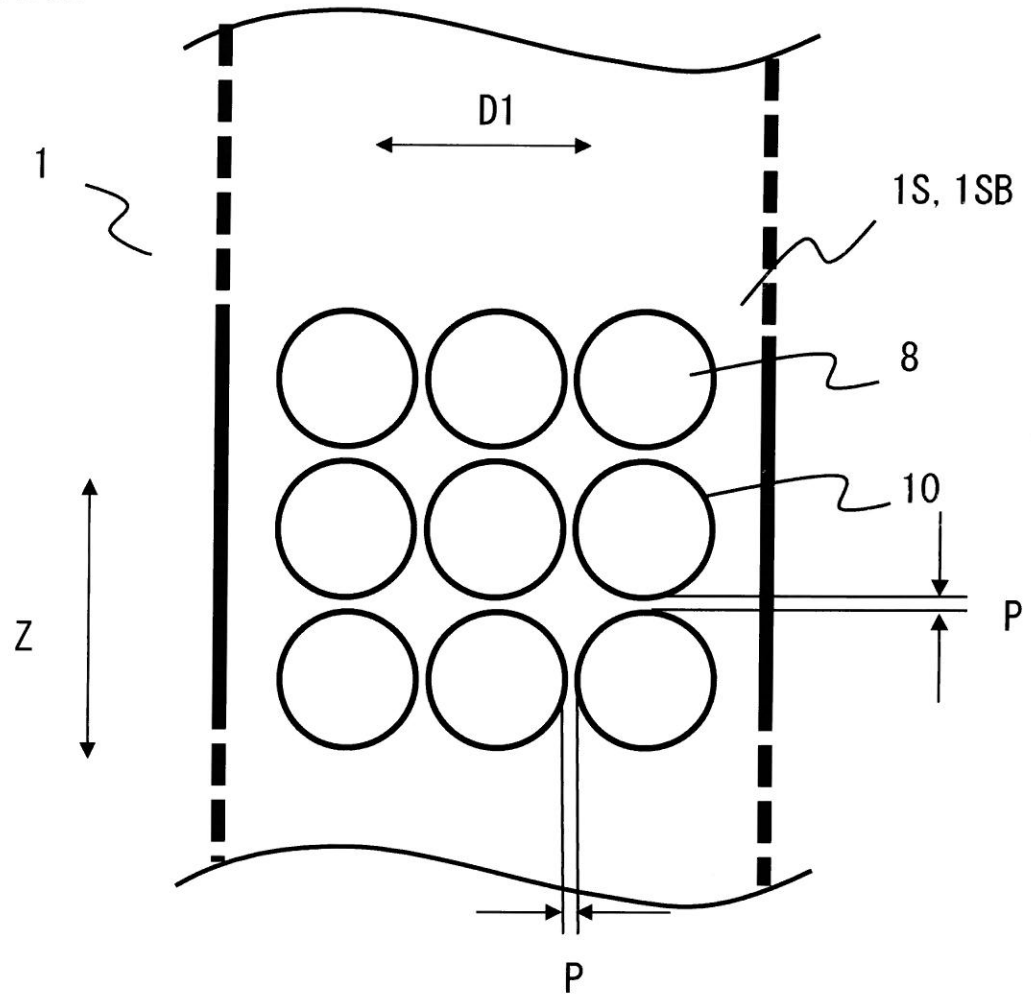

FIG.10

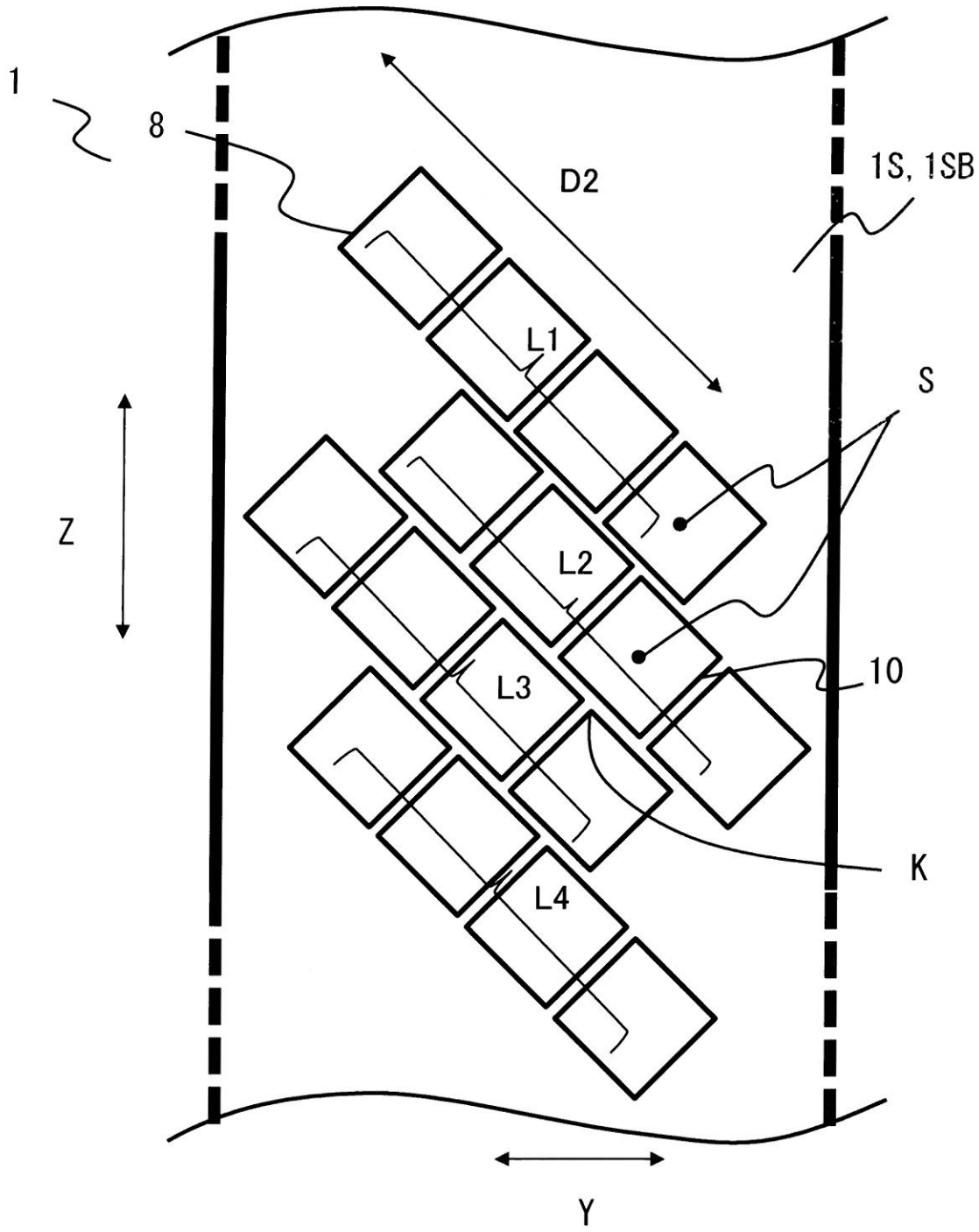

FIG.11

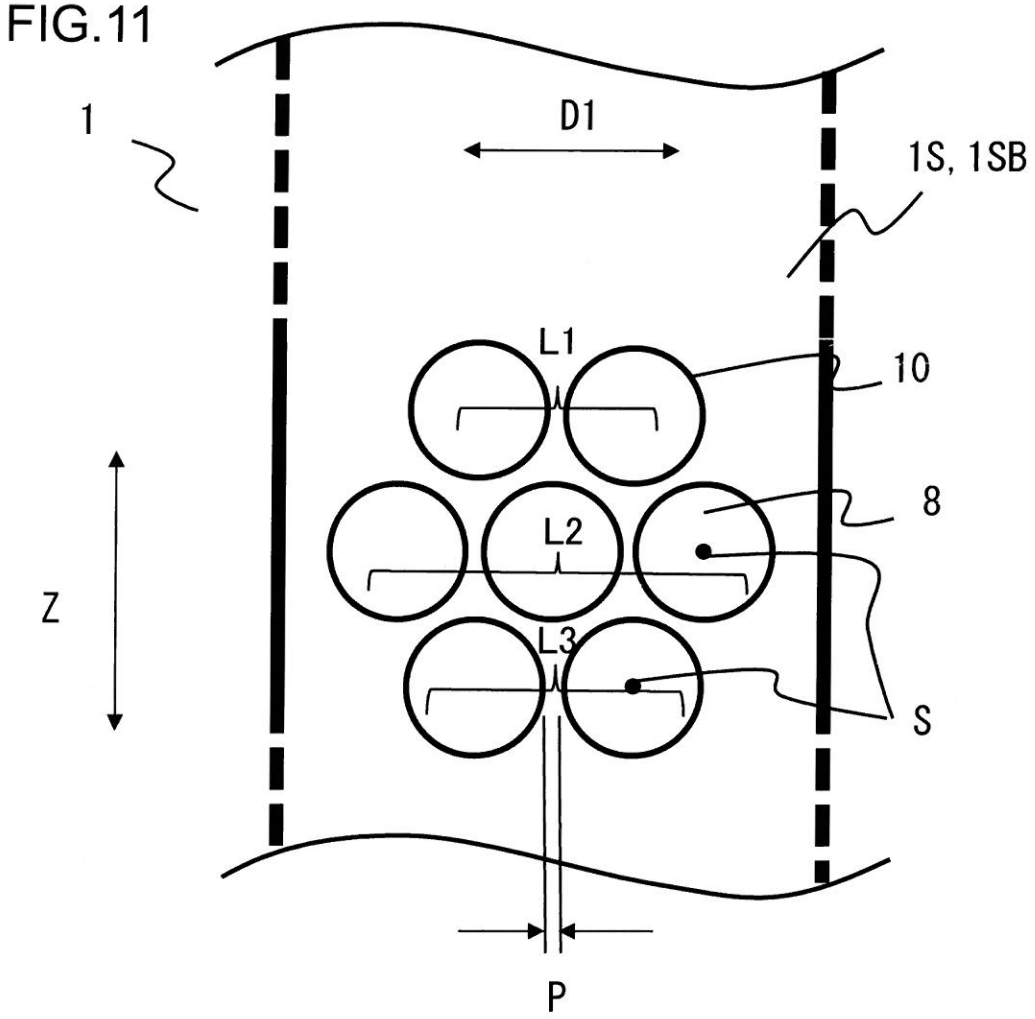

FIG.12

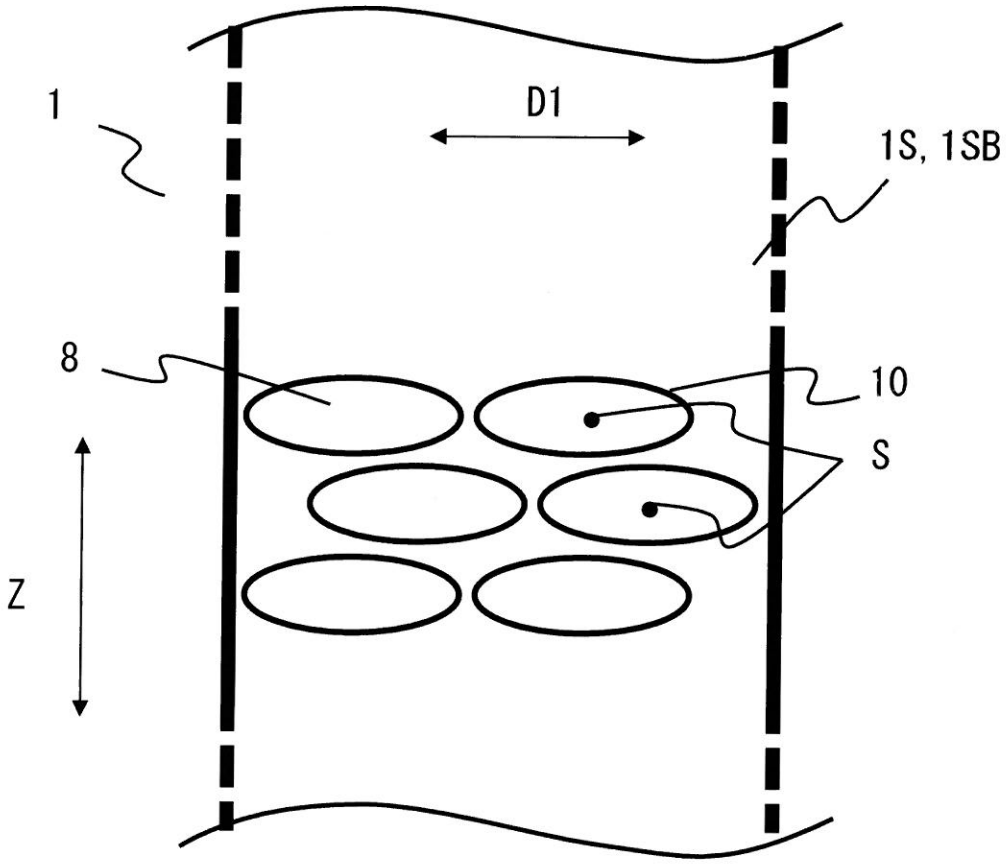

FIG.13

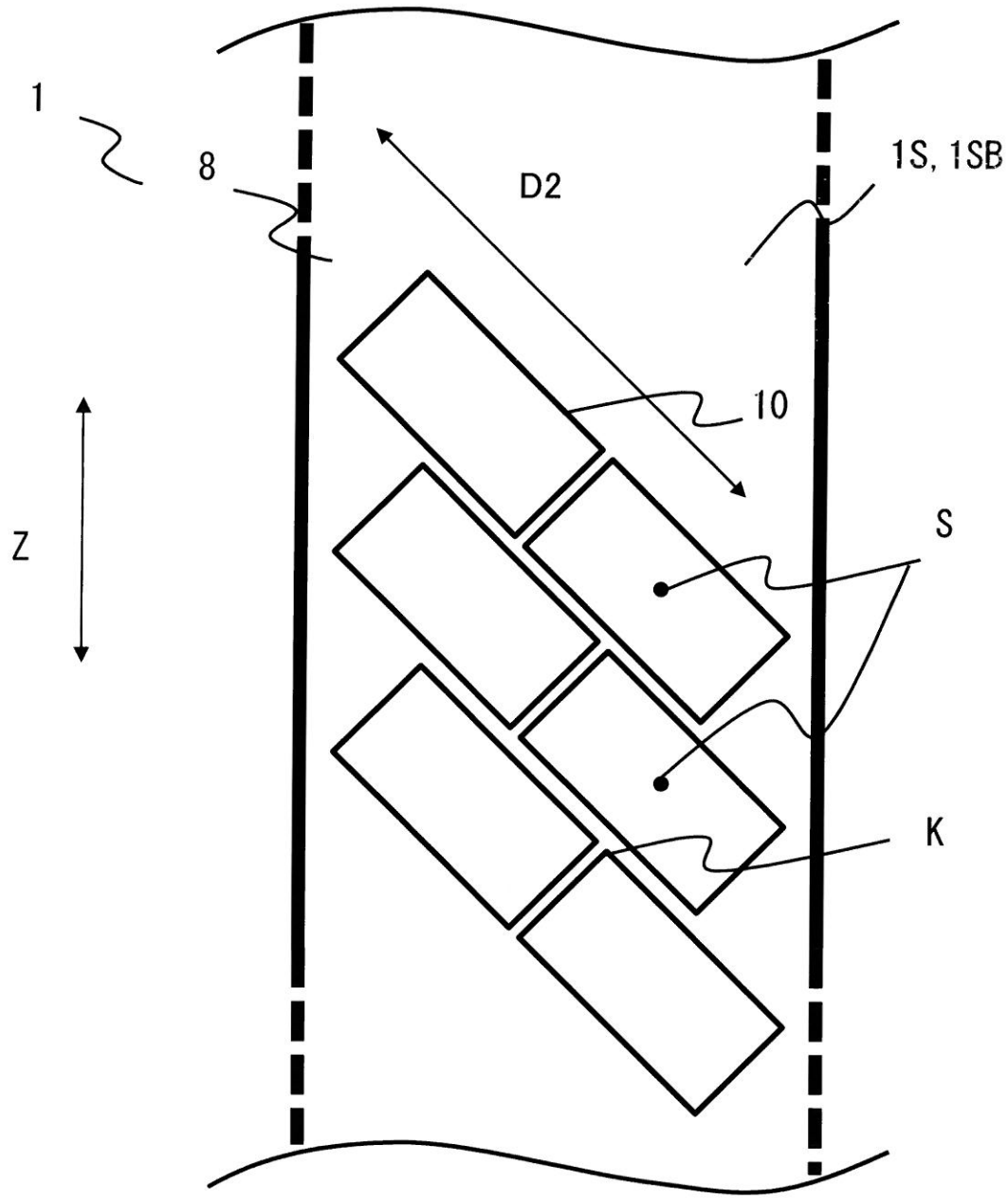

FIG.14

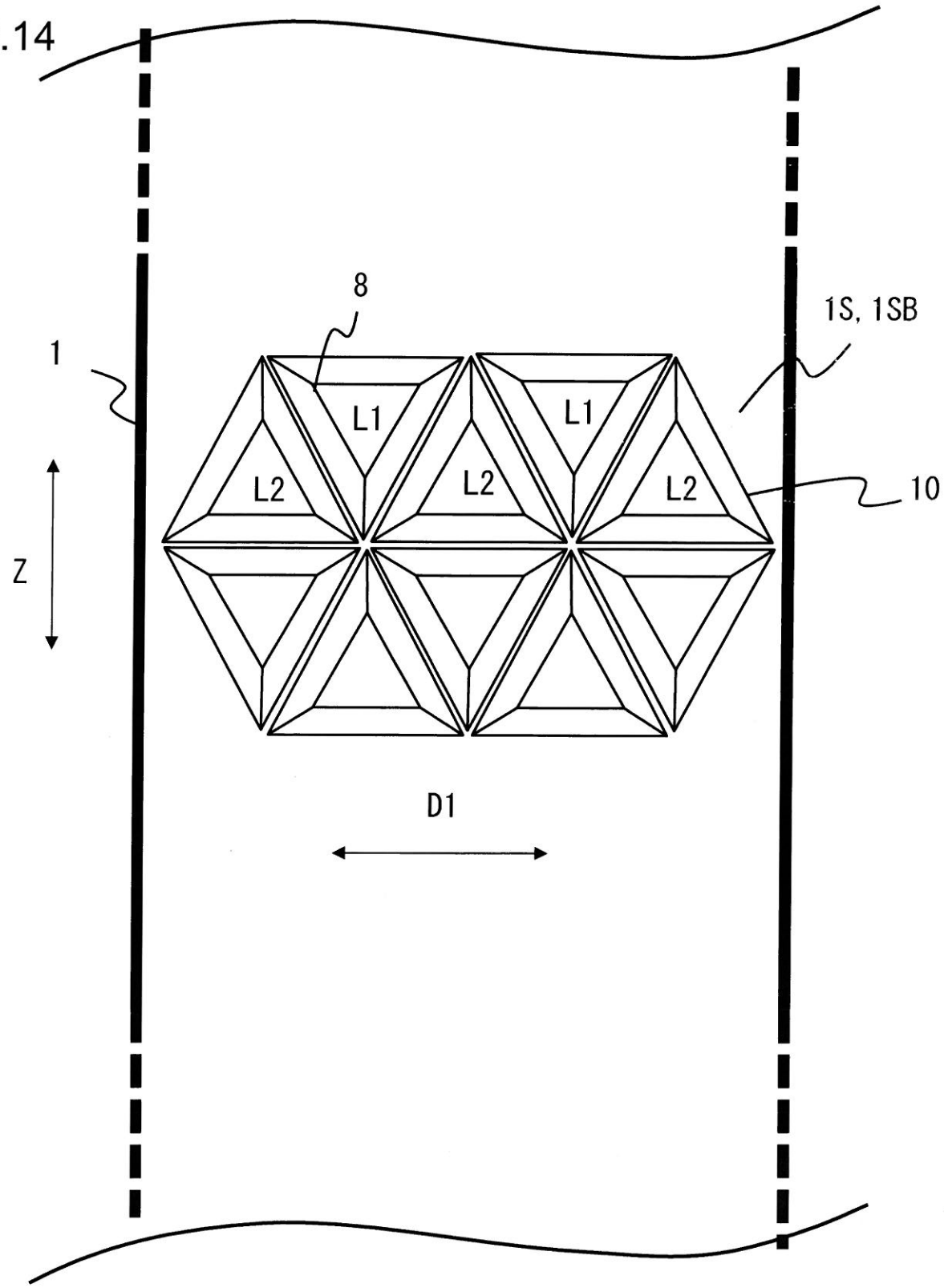

FIG.15A

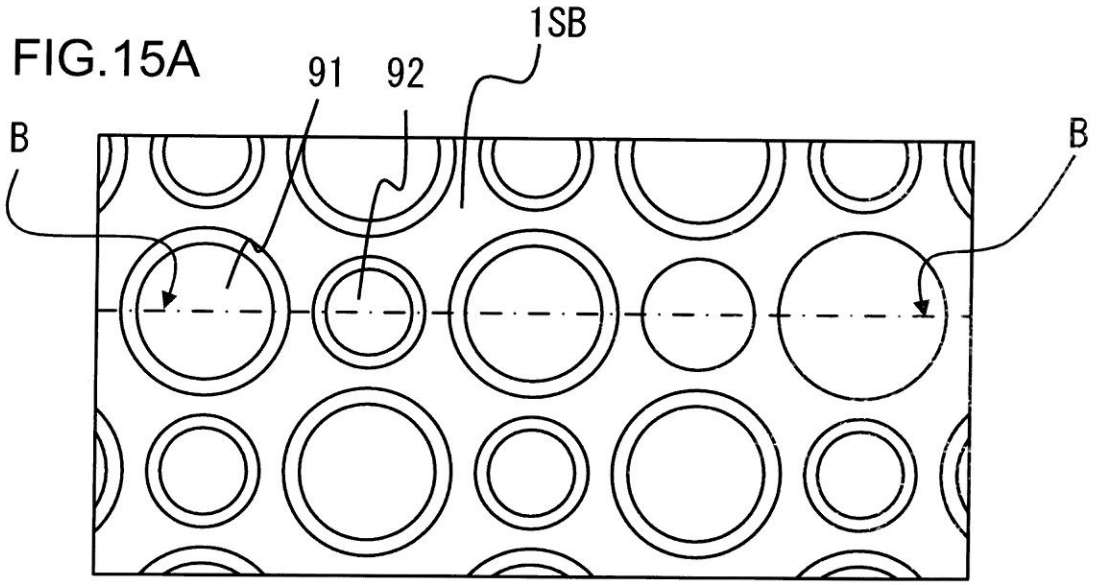

FIG.15B

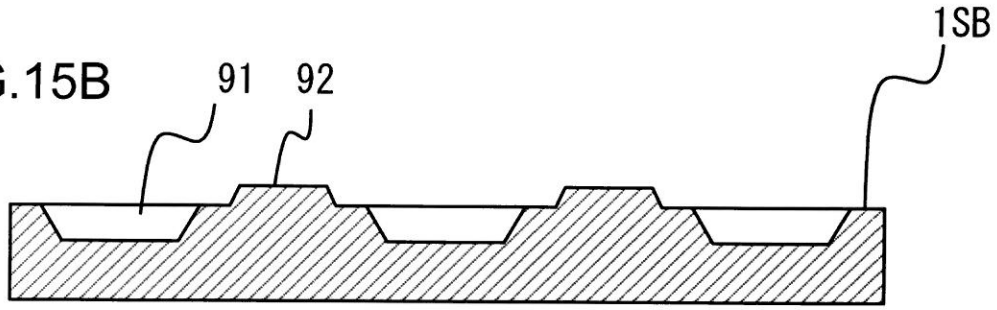

FIG.16

