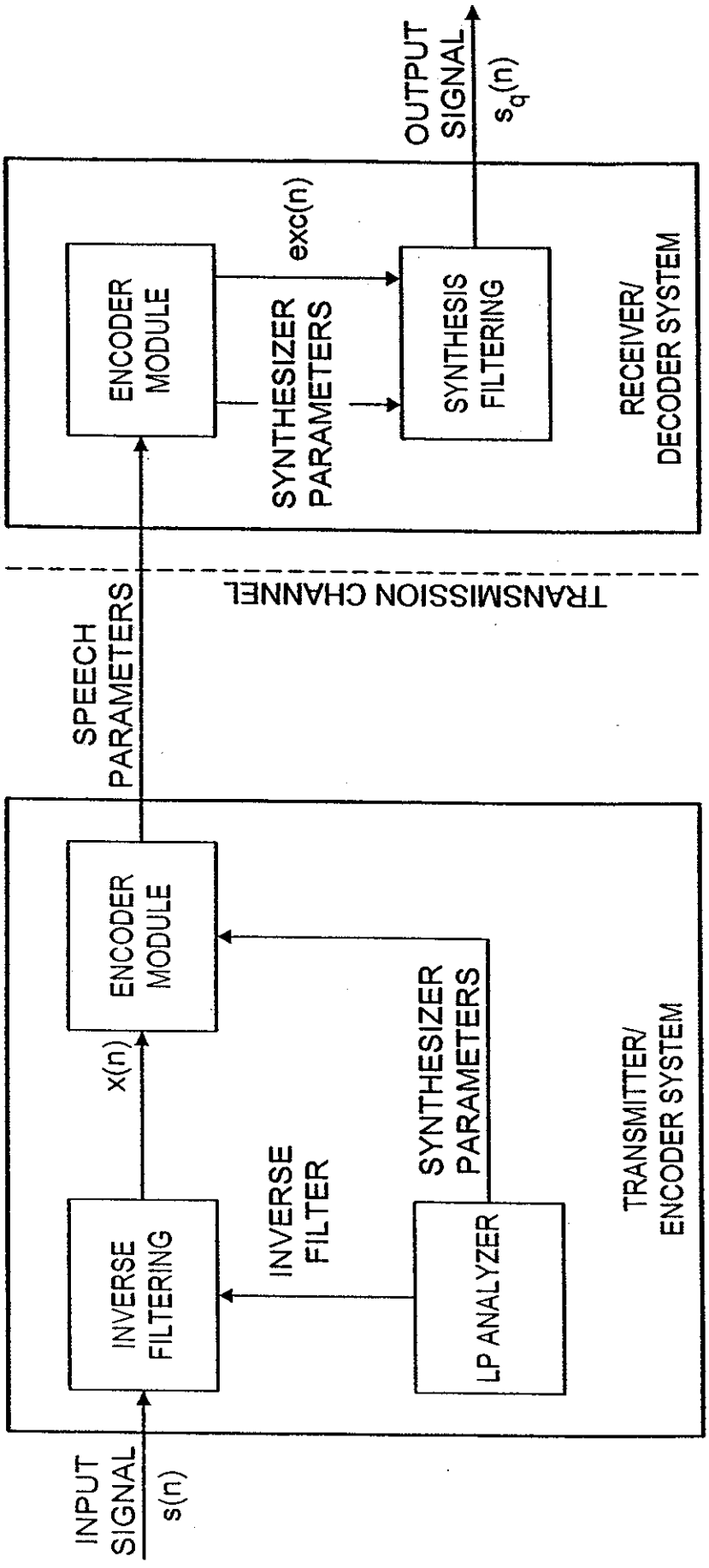

FIG. 1
(PRIOR ART)

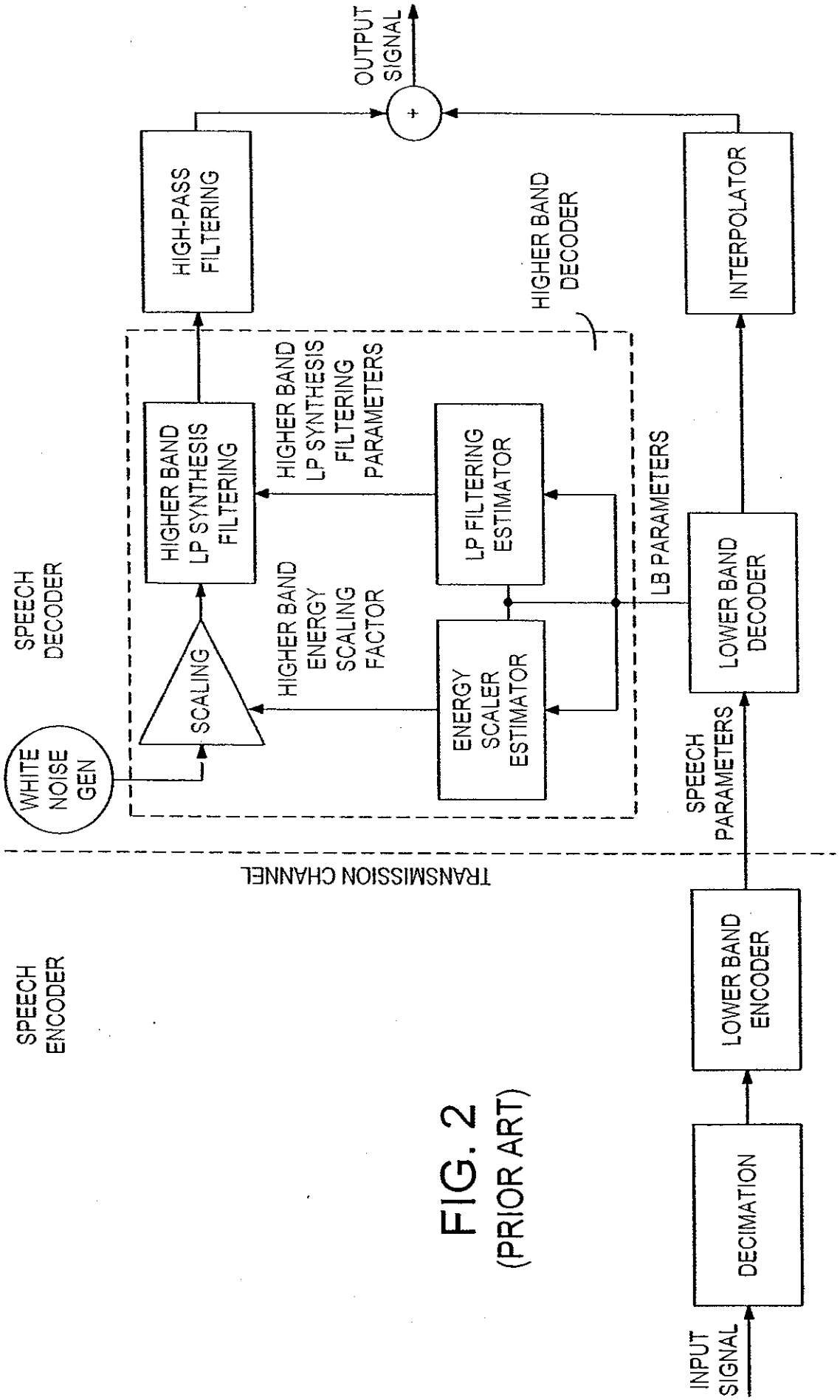

FIG. 2
(PRIOR ART)

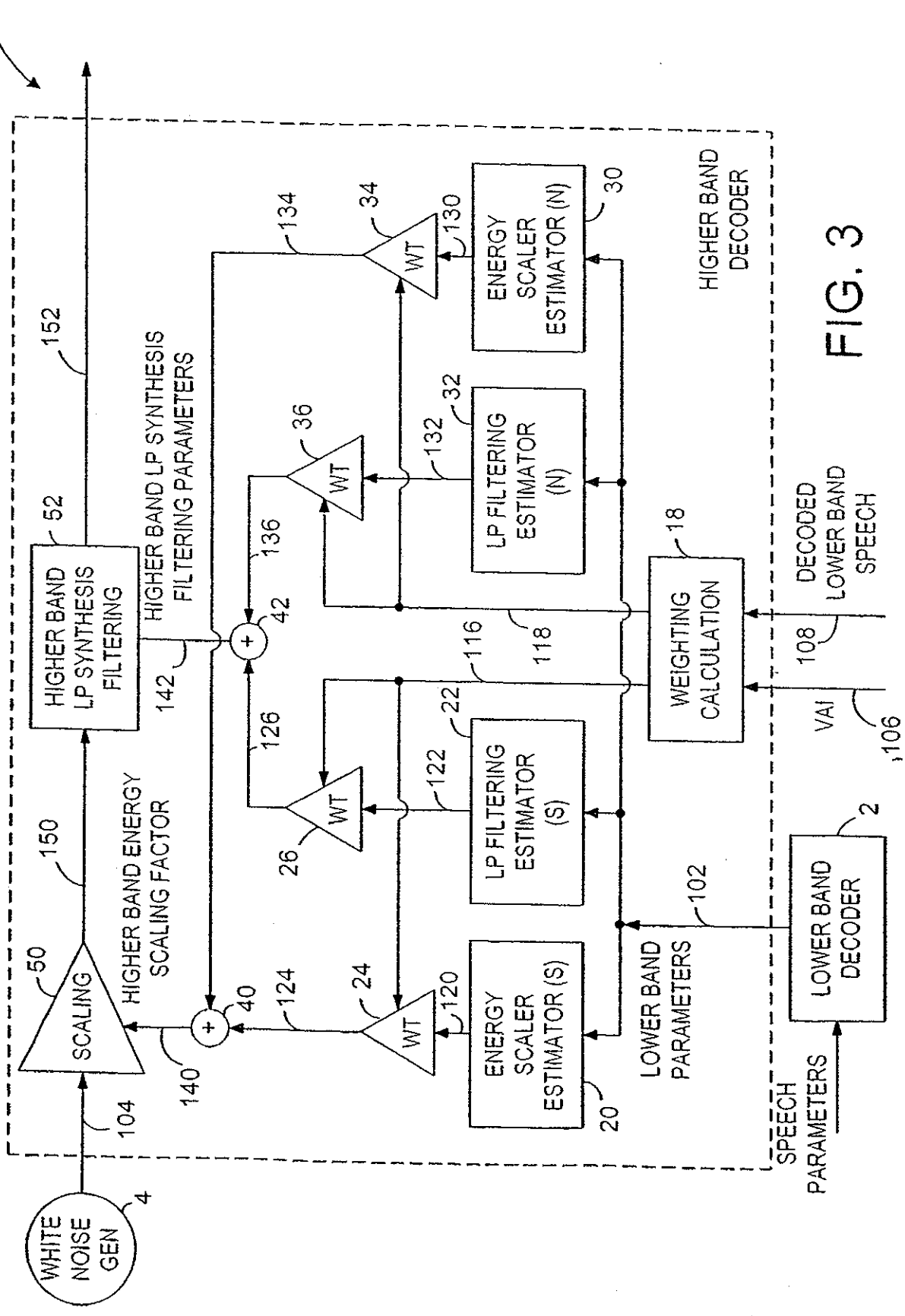
10
WHITE NOISE GEN
4
104
SCALING
50
150
HIGHER BAND ENERGY SCALING FACTOR
140
40
124
WT
24
120
ENERGY SCALER ESTIMATOR (S)
20
LOWER BAND PARAMETERS
102
LOWER BAND DECODER
2
SPEECH PARAMETERS
126
WT
26
122
LP FILTERING ESTIMATOR (S)
22
116
WEIGHTING CALCULATION
18
VAI
106
108
DECODED LOWER BAND SPEECH
HIGHER BAND DECODER
136
42
142
HIGHER BAND LP SYNTHESIS FILTERING PARAMETERS
52
HIGHER BAND LP SYNTHESIS FILTERING
152
134
WT
34
130
ENERGY SCALER ESTIMATOR (N)
30
132
WT
36
LP FILTERING ESTIMATOR (N)
32
118

FIG. 3

FIG. 4

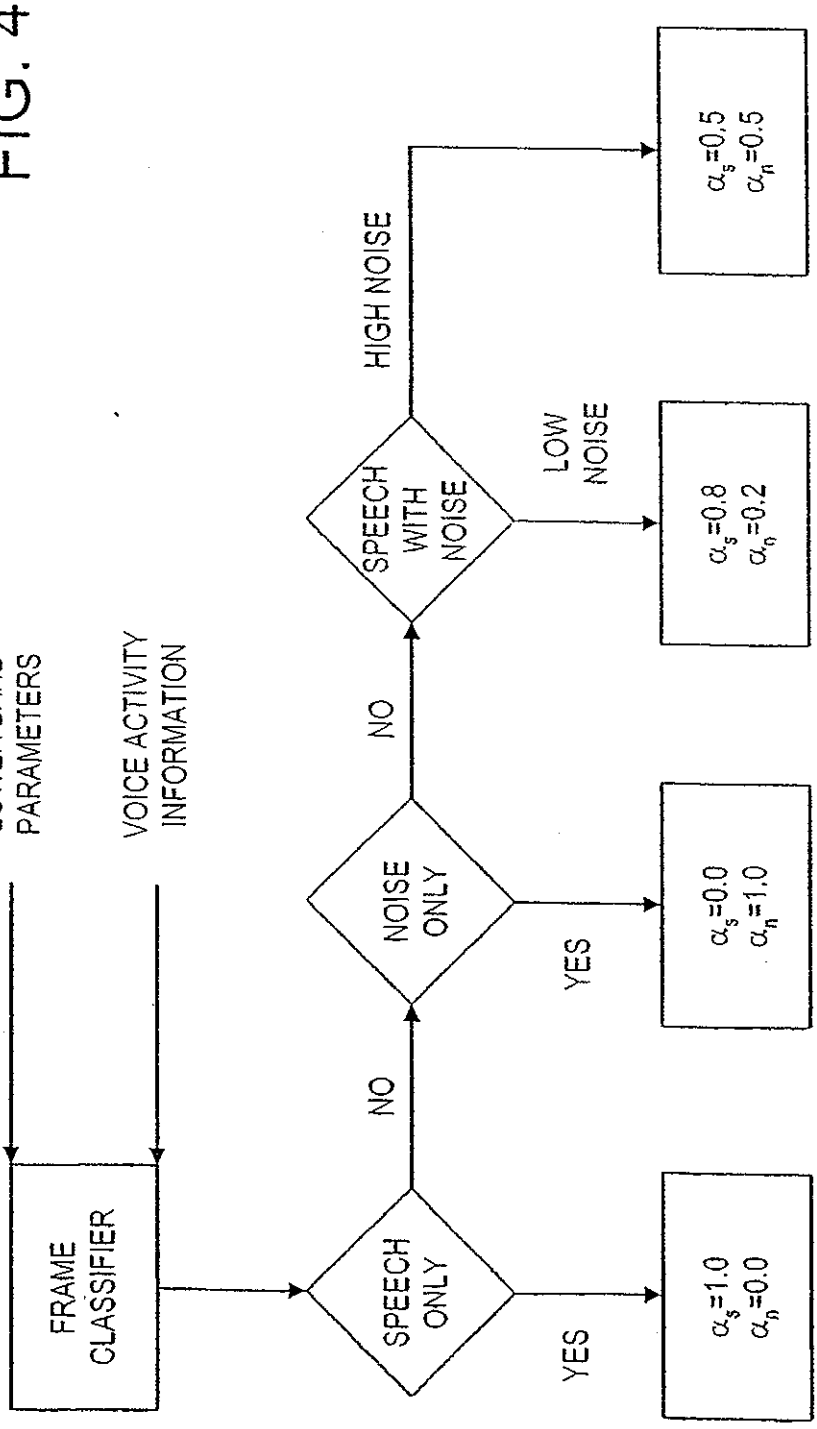
LOWER BAND PARAMETERS
VOICE ACTIVITY INFORMATION
FRAME CLASSIFIER
SPEECH ONLY
YES
α_s=1.0
α_n=0.0
NO
NOISE ONLY
YES
α_s=0.0
α_n=1.0
NO
SPEECH WITH NOISE
LOW NOISE
α_s=0.8
α_n=0.2
HIGH NOISE
α_s=0.5
α_n=0.5

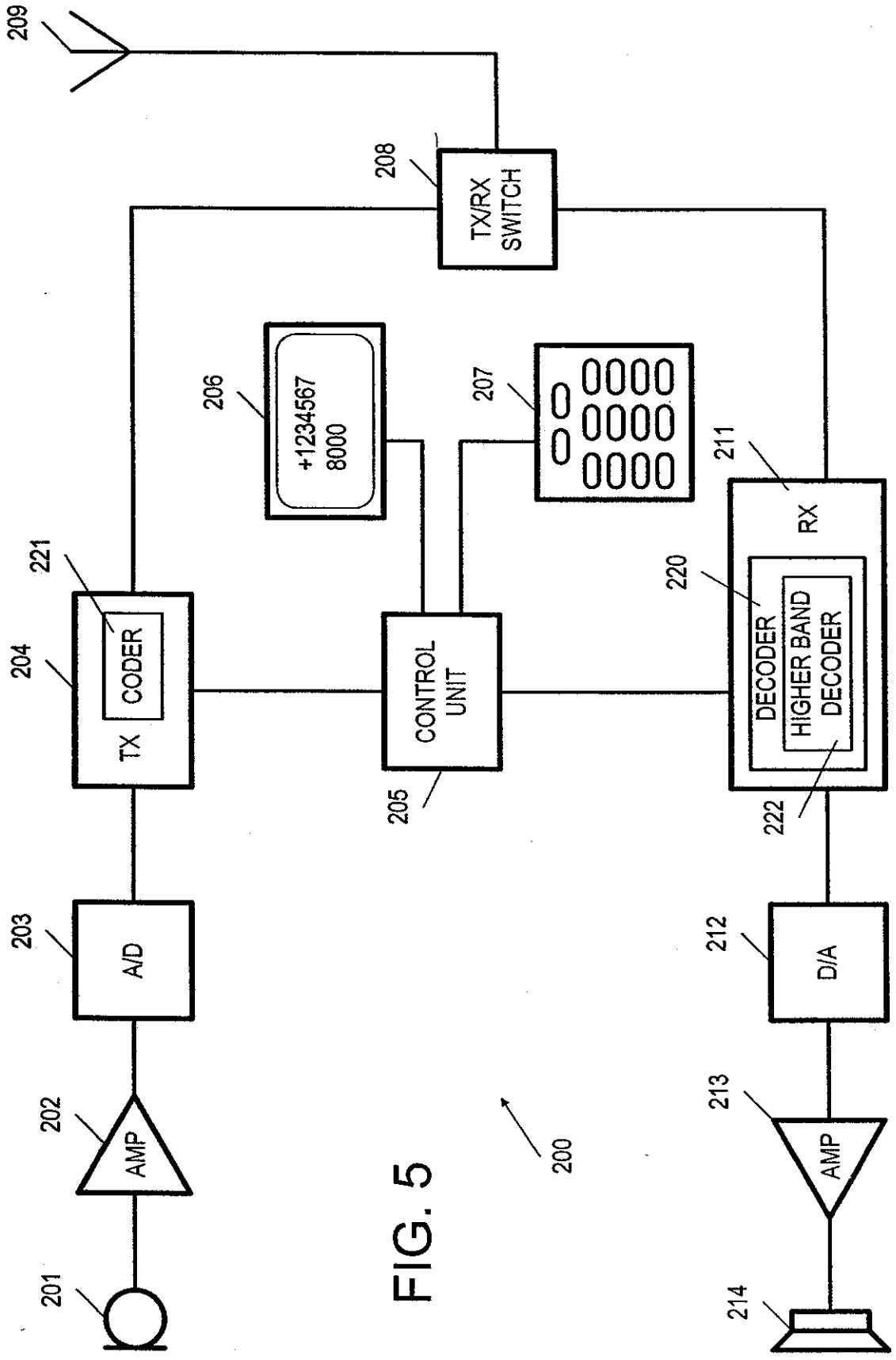
209
208
TX/RX SWITCH
206
+1234567 8000
207
0000 0000 0000
211
RX
221
CODER
204
TX
CONTROL UNIT
205
220
DECODER
HIGHER BAND DECODER
222
203
A/D
212
D/A
202
AMP
213
AMP
201
214
200

FIG. 5

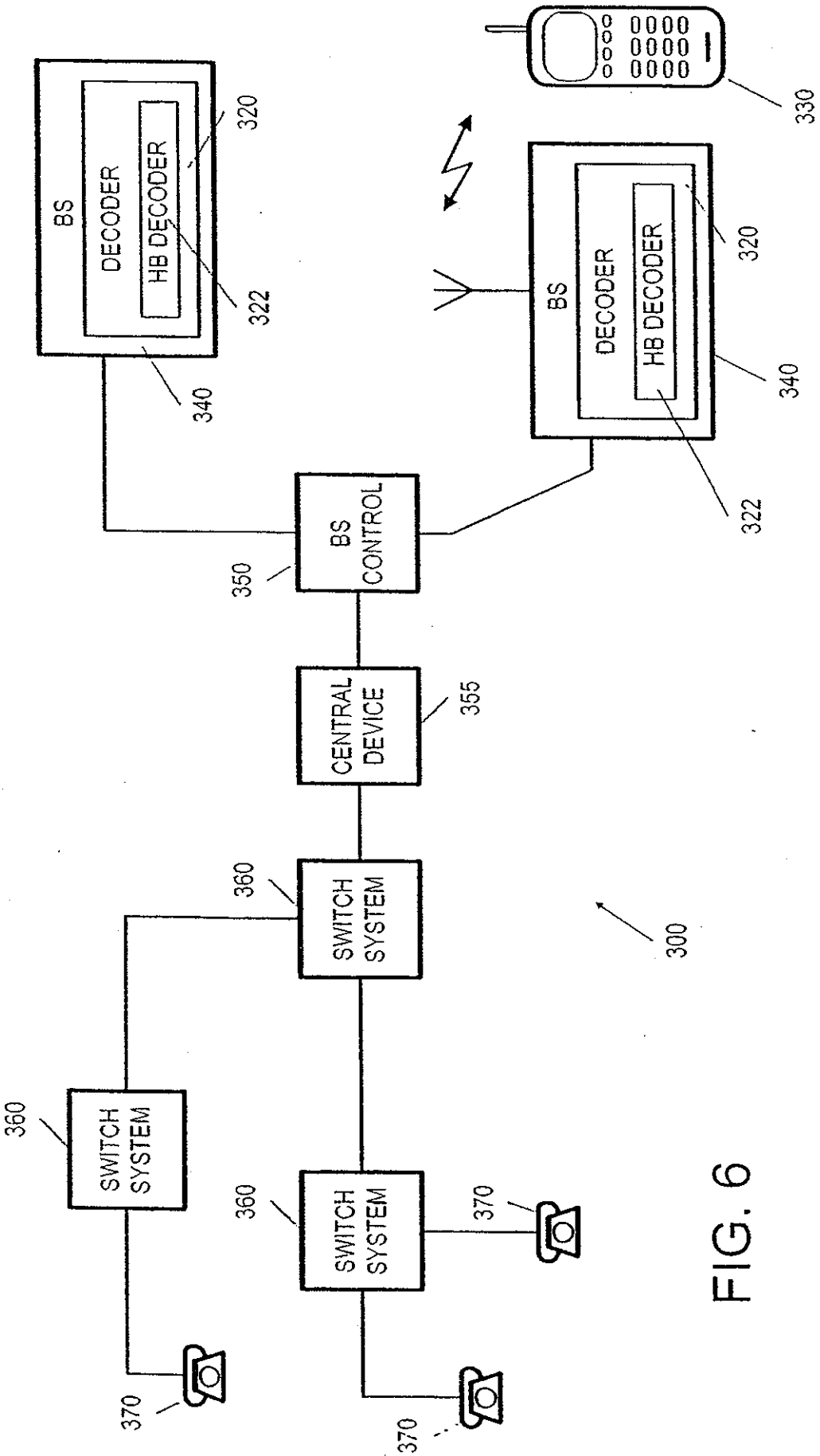
BS
DECODER
HB DECODER
320
322
340
330
BS CONTROL
350
CENTRAL DEVICE
355
SWITCH SYSTEM
360
370
300

FIG. 6