FIG. 1

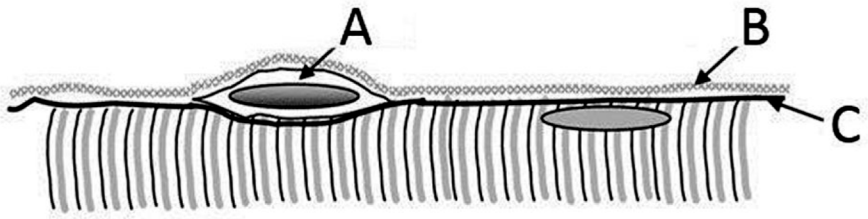

FIG. 2

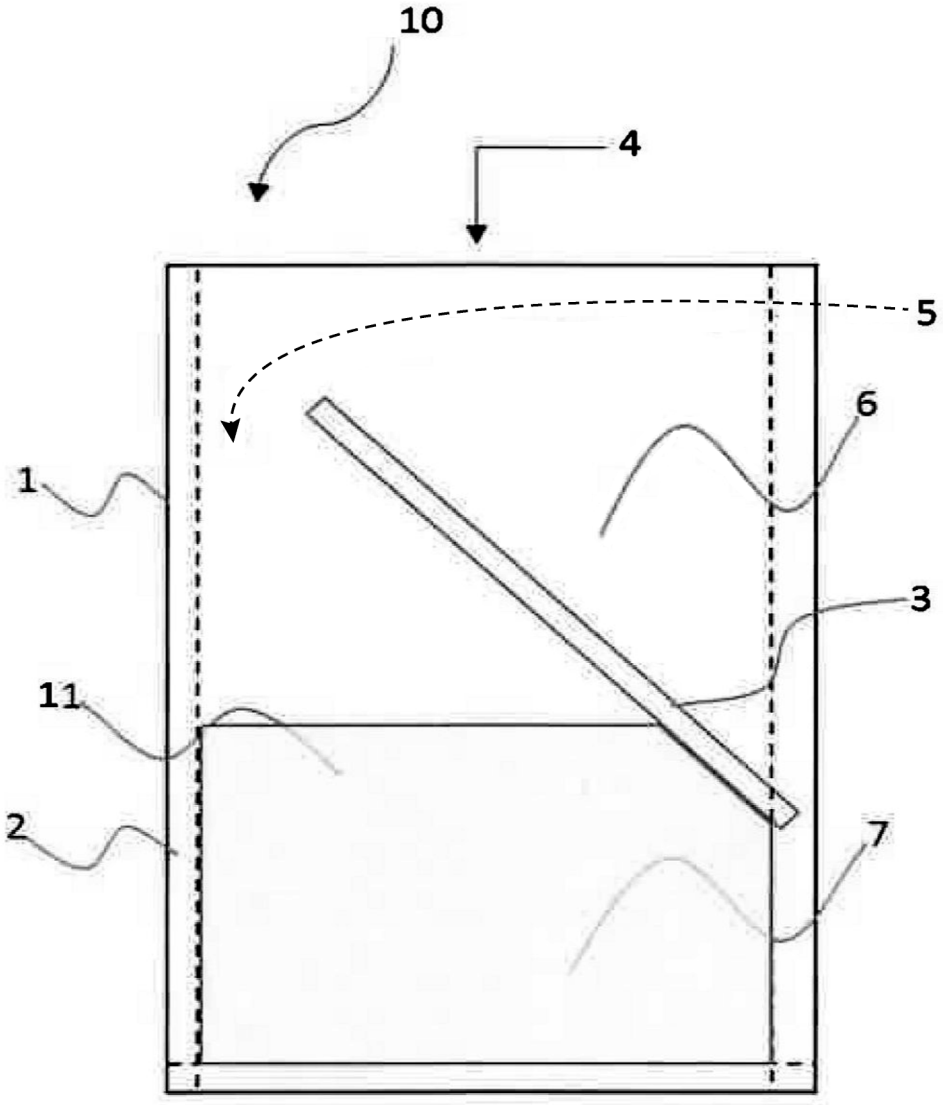

FIG. 3

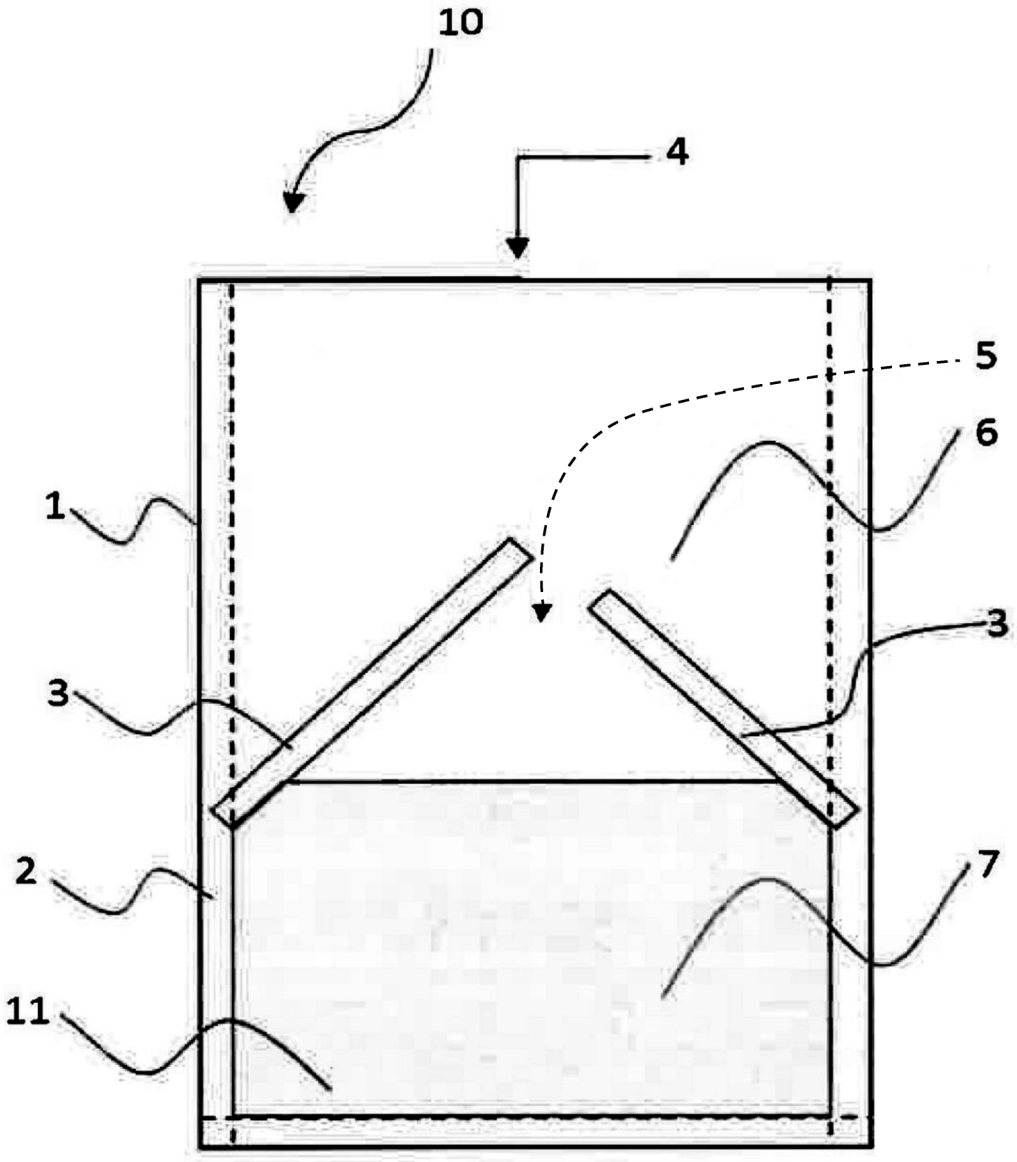

FIG. 4



FIG. 5

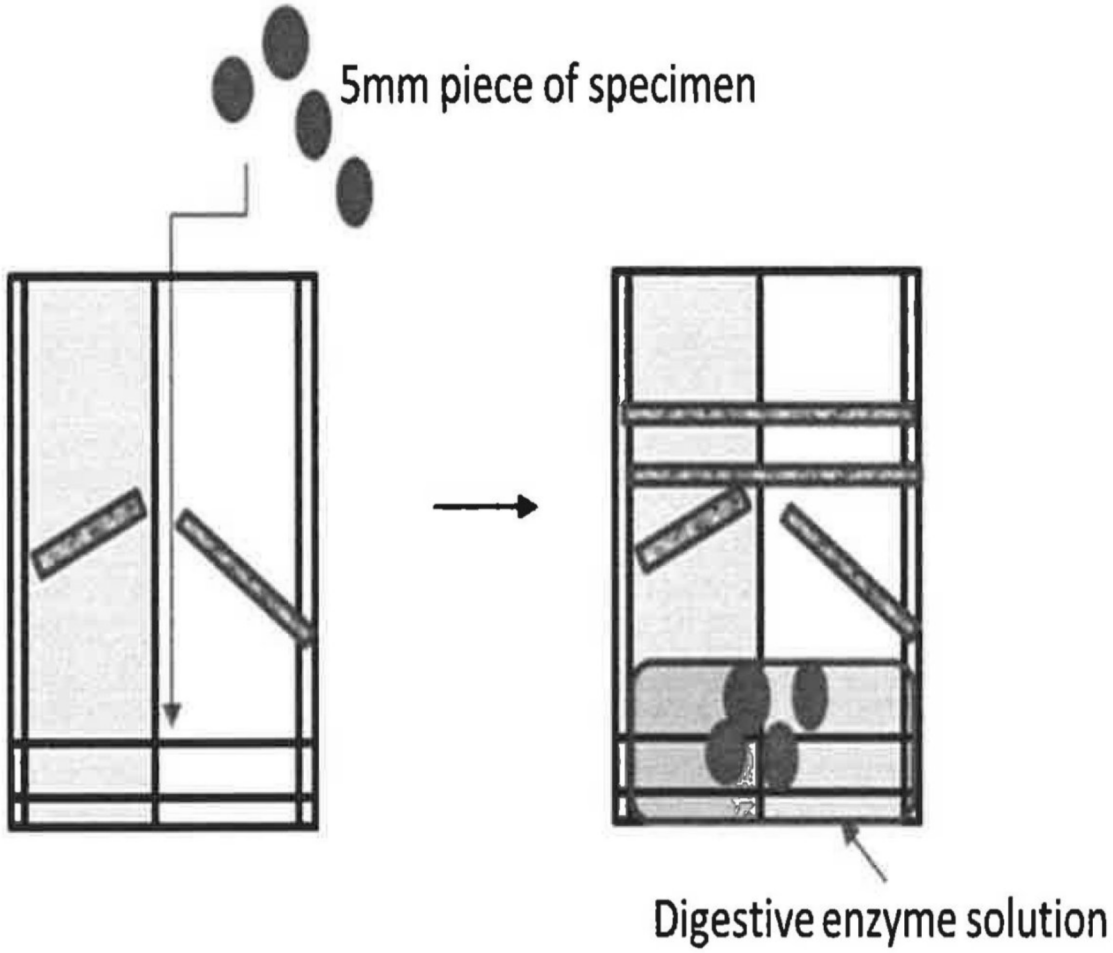
5mm piece of specimen
Digestive enzyme solution

FIG. 6


Sealed part

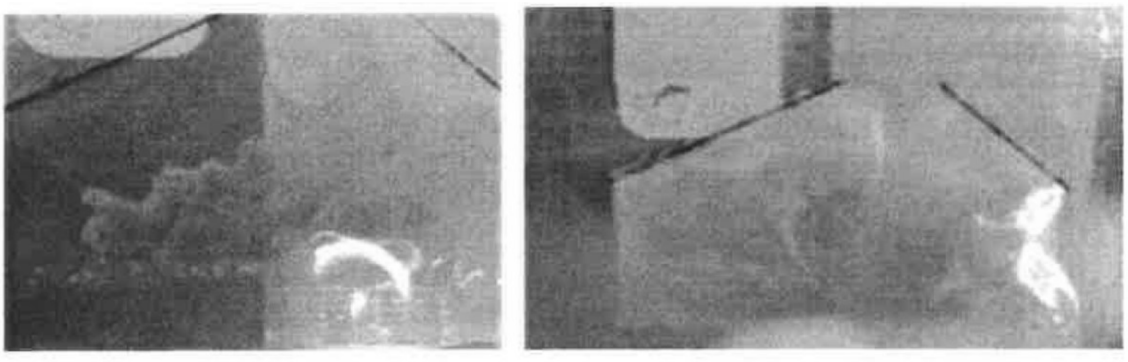

A B

FIG. 7

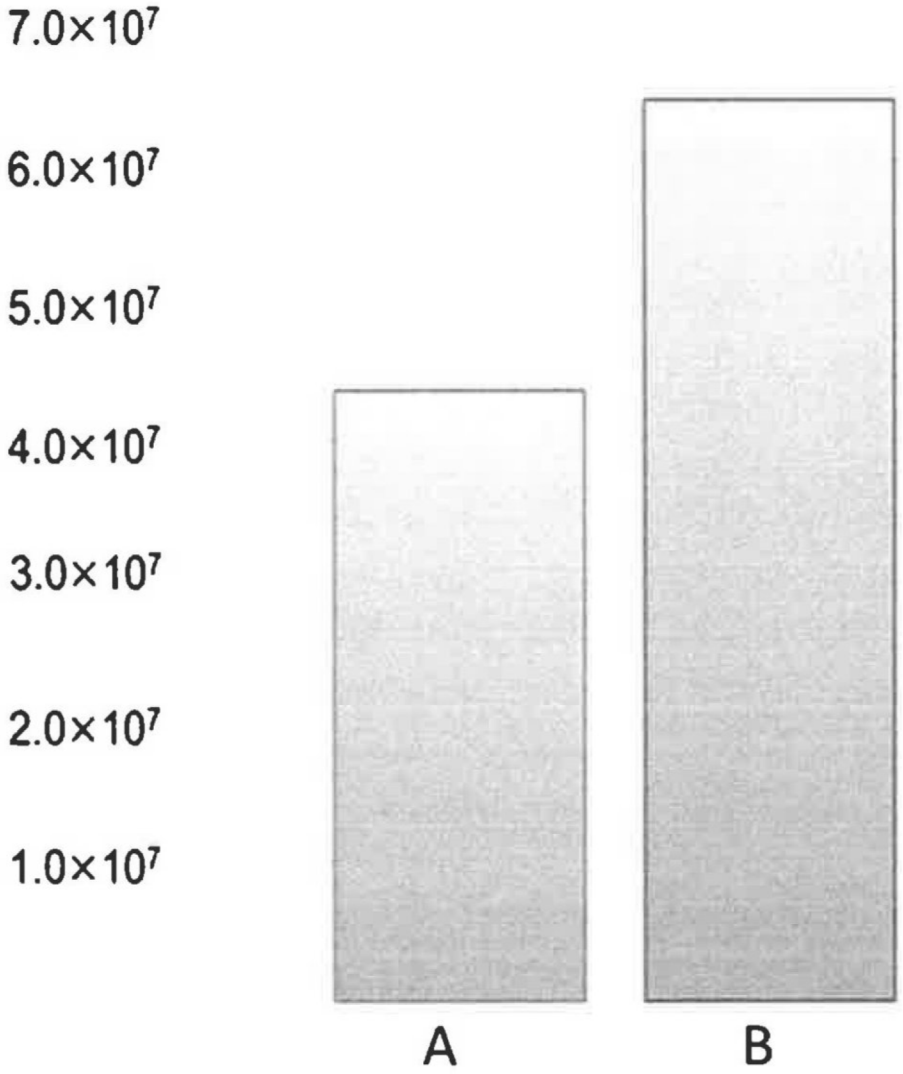

FIG. 8

