Patent Specification

CURVING STONE

Drawing

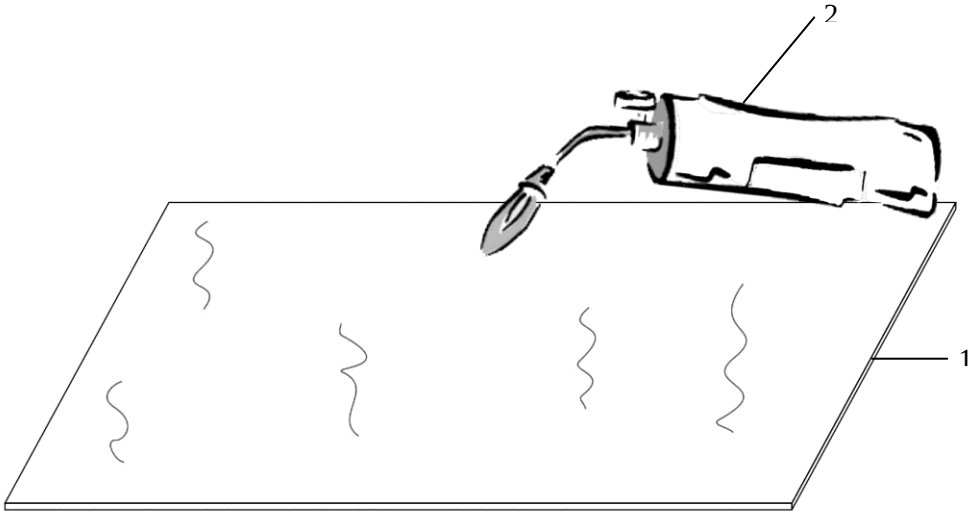

Fig.1

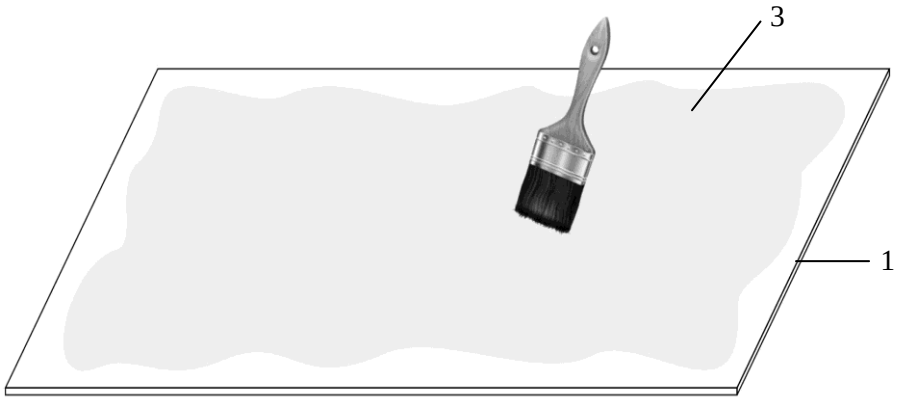

Fig.2

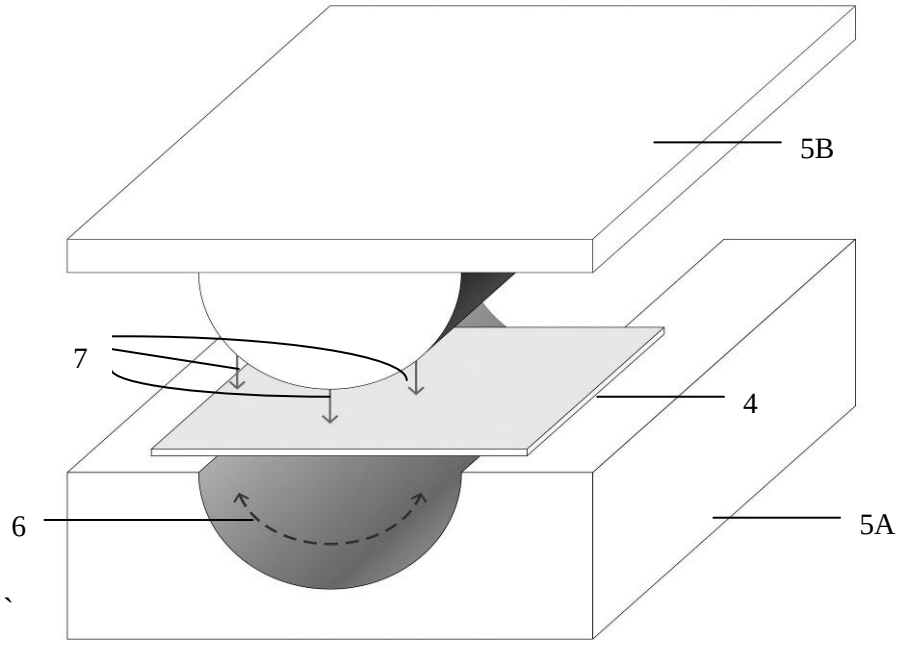

Fig.3A

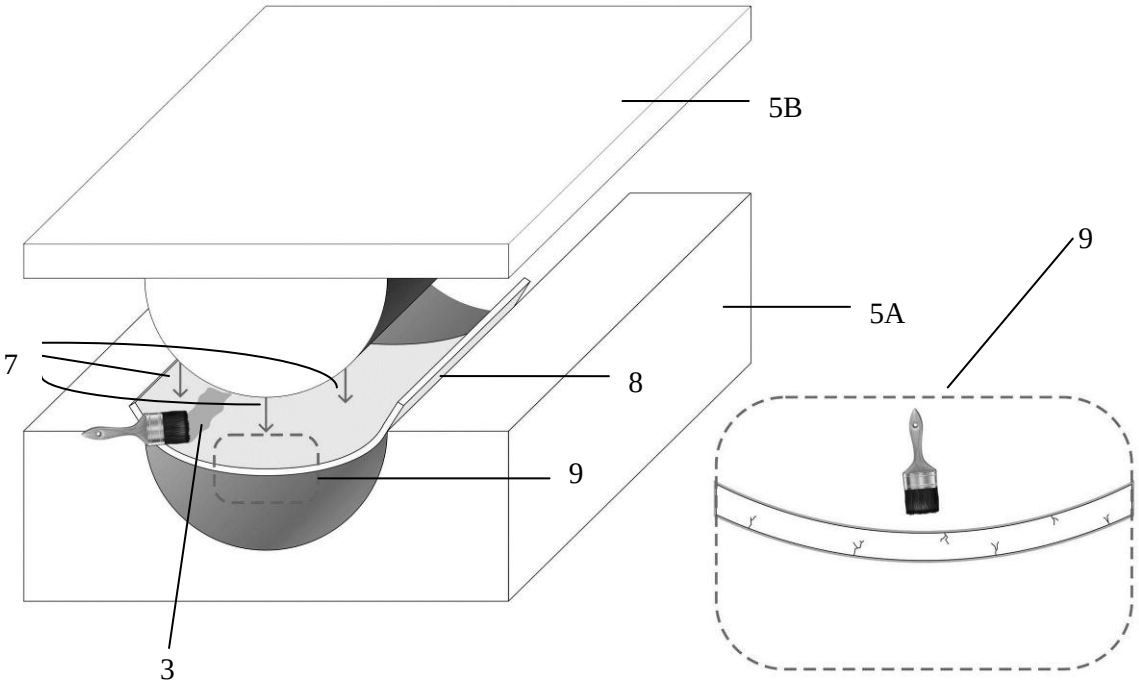

Fig.3B

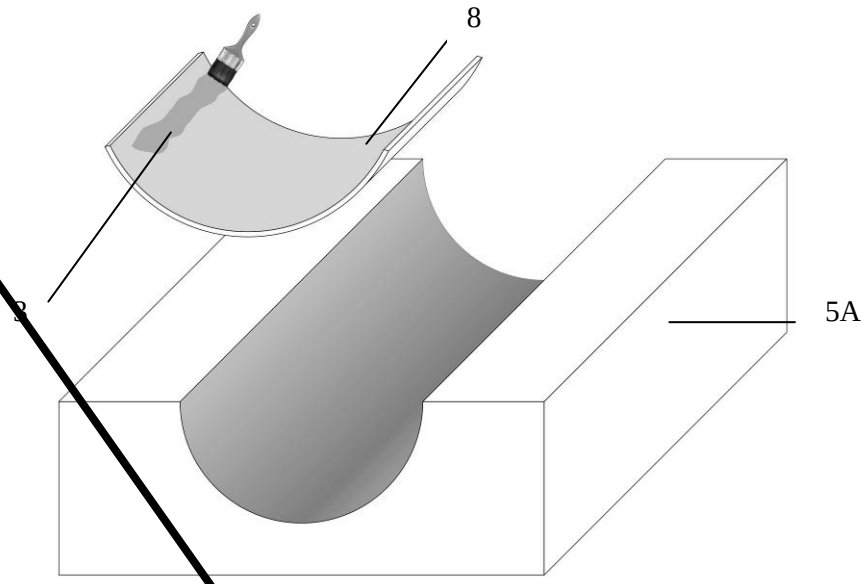

Fig. 4

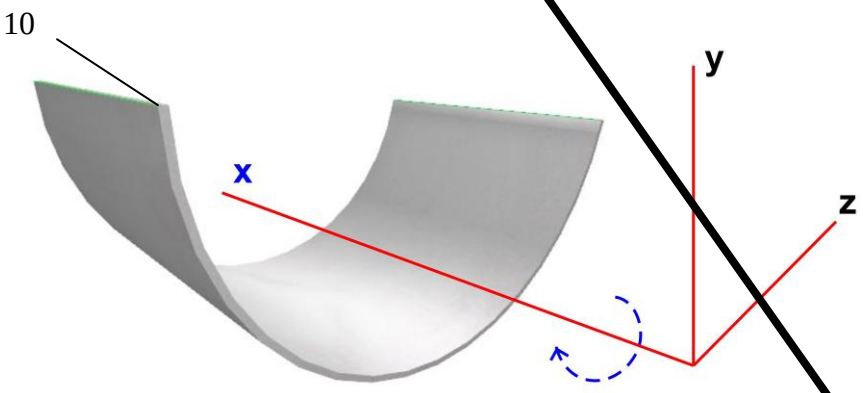

~~Fig. 5~~

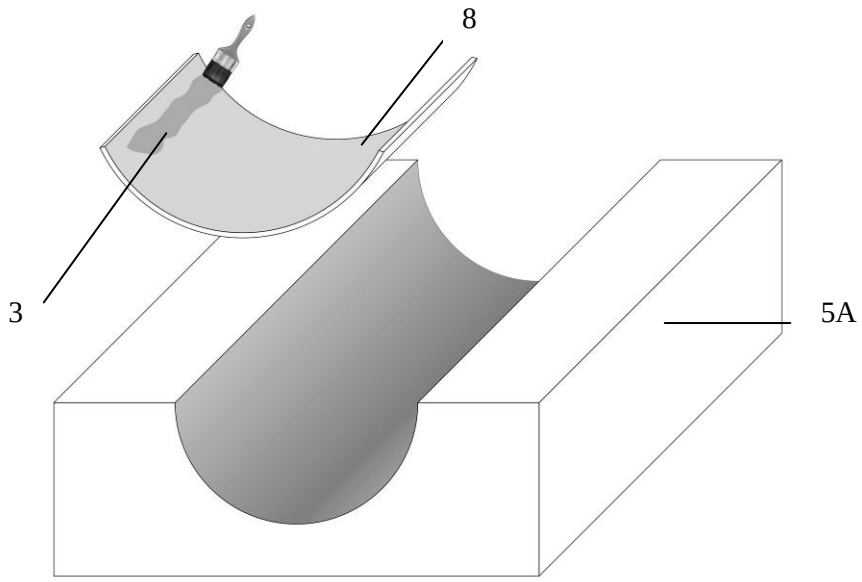

Fig. 4

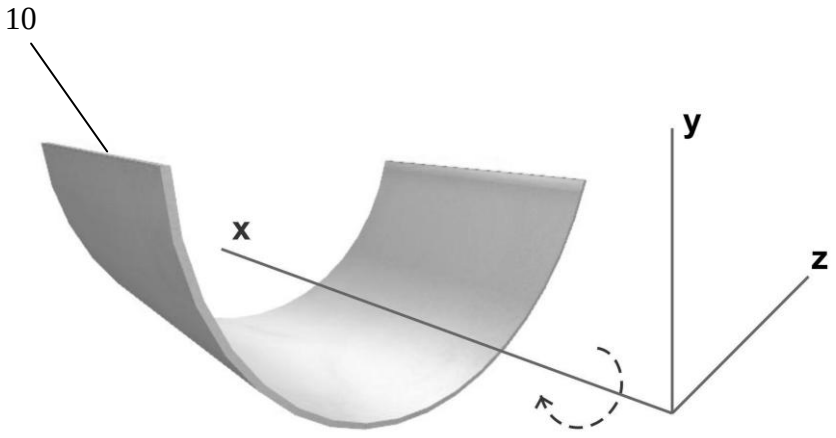

Fig. 5

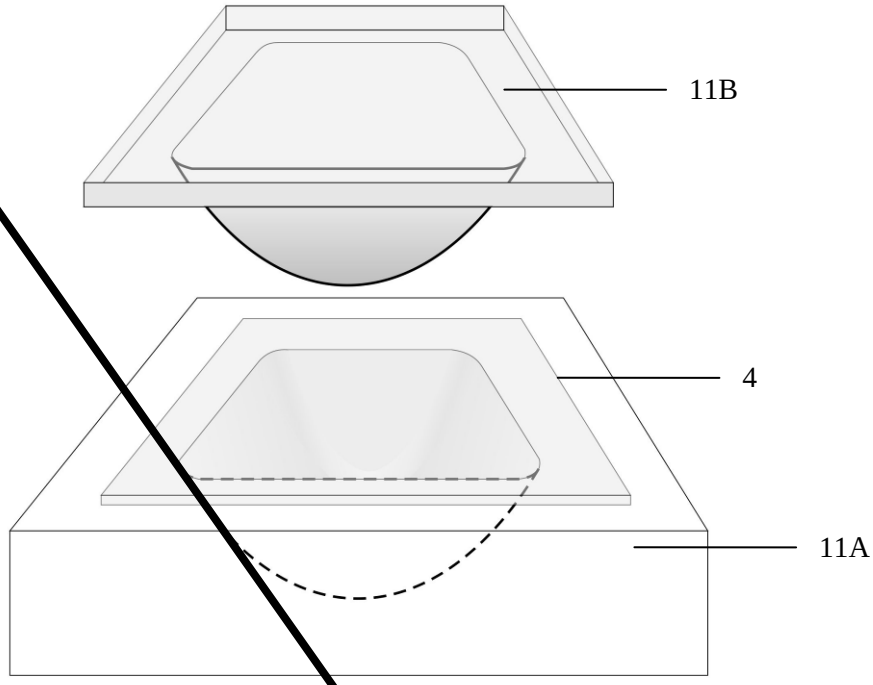

Fig. 6A

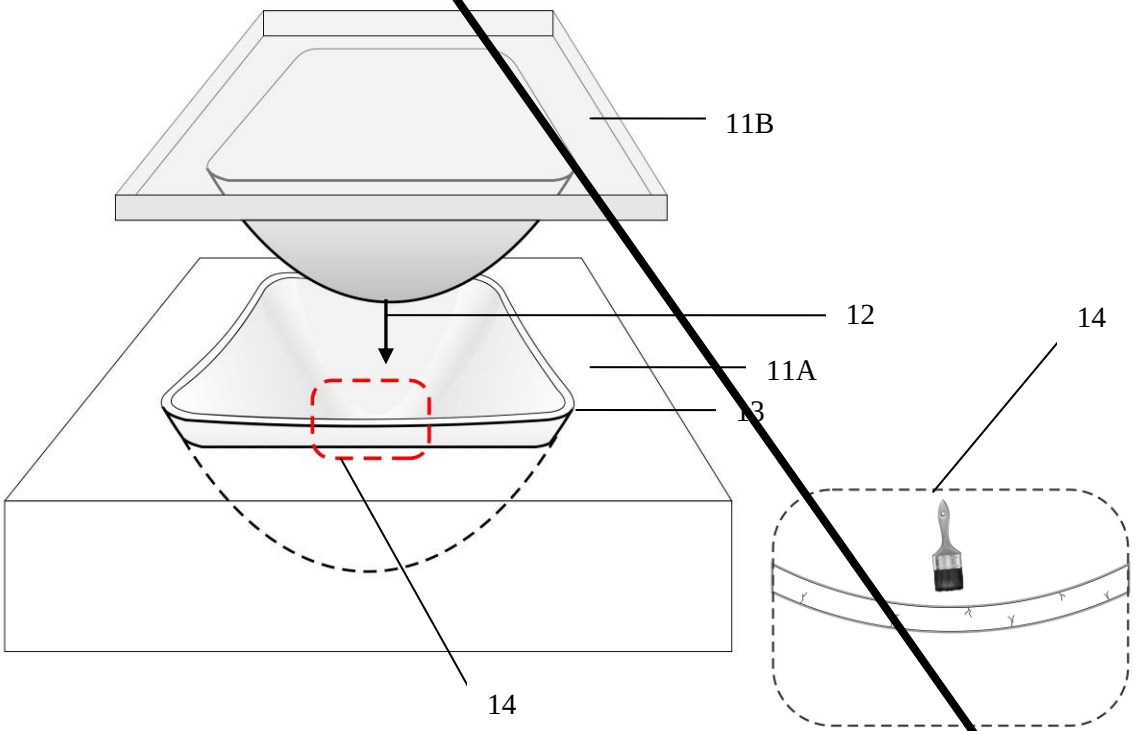

~~Fig. 6B~~

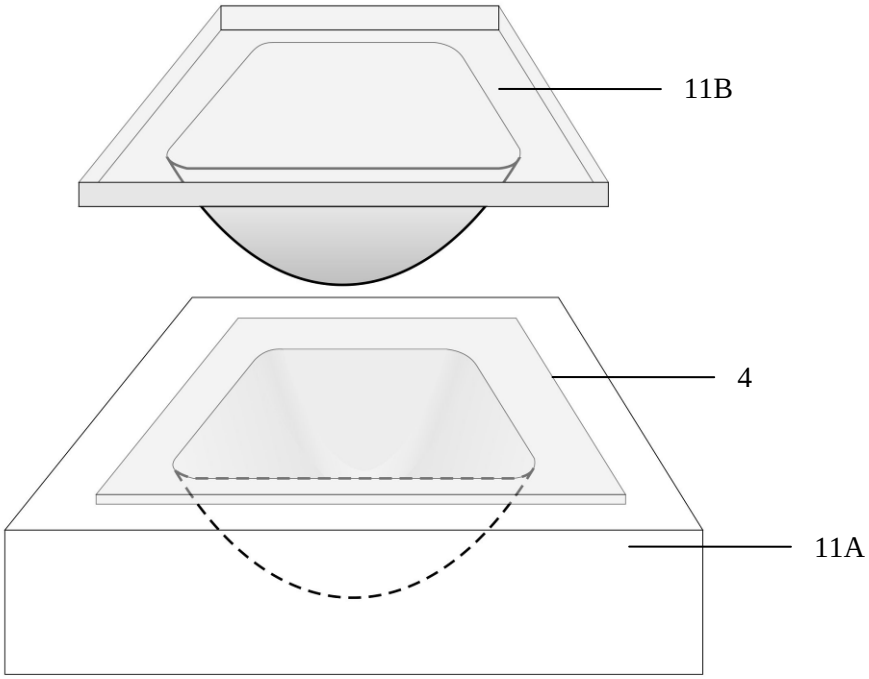

Fig. 6A

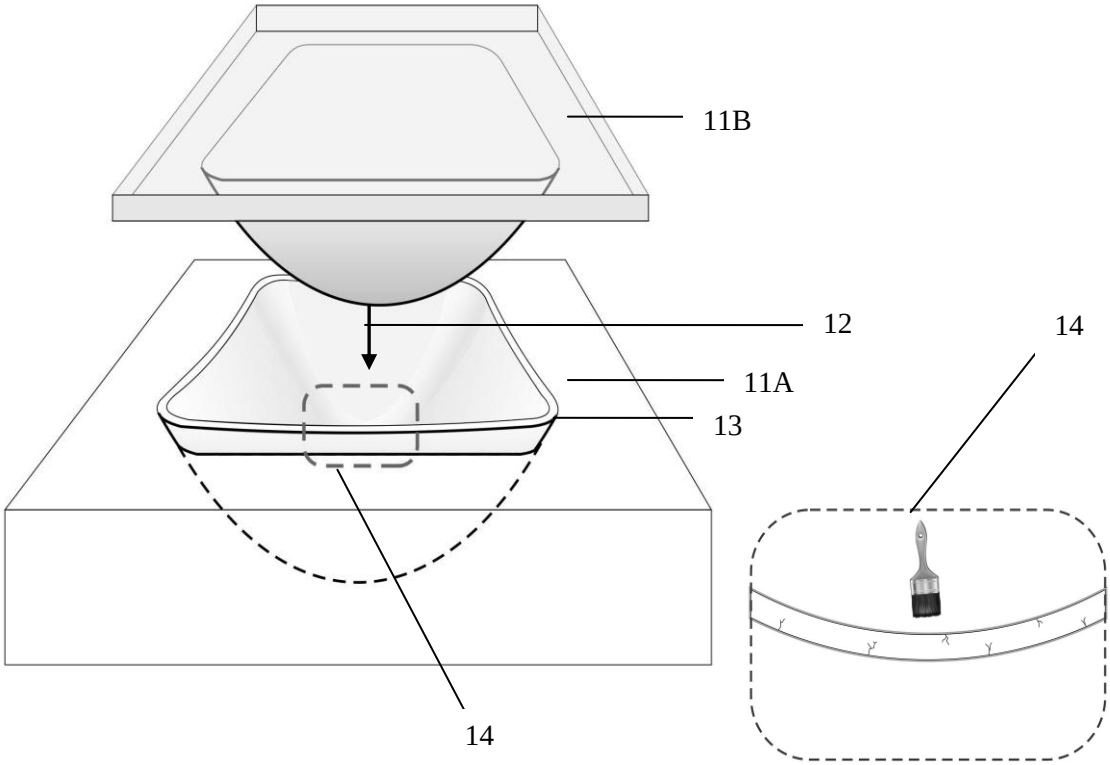

Fig. 6B

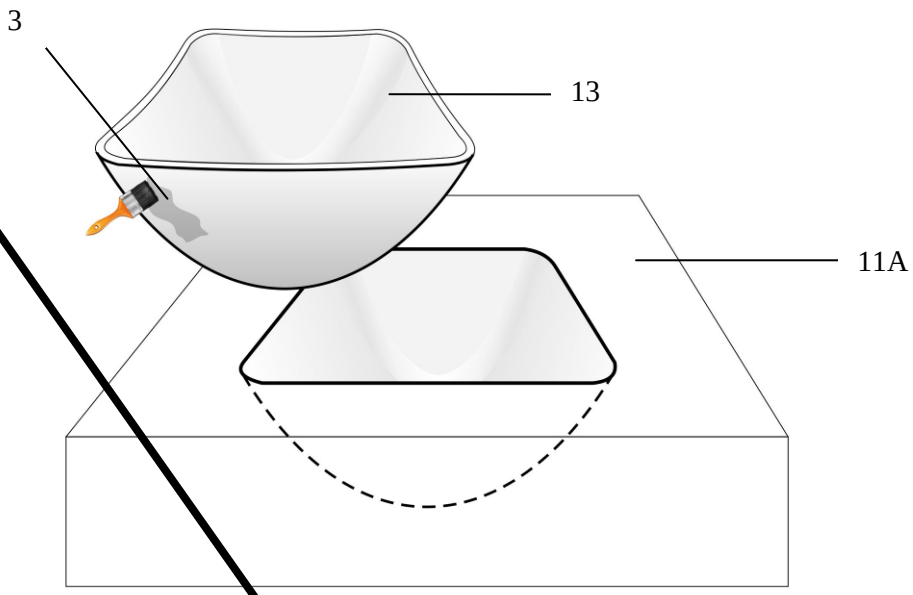

~~Fig. 7~~

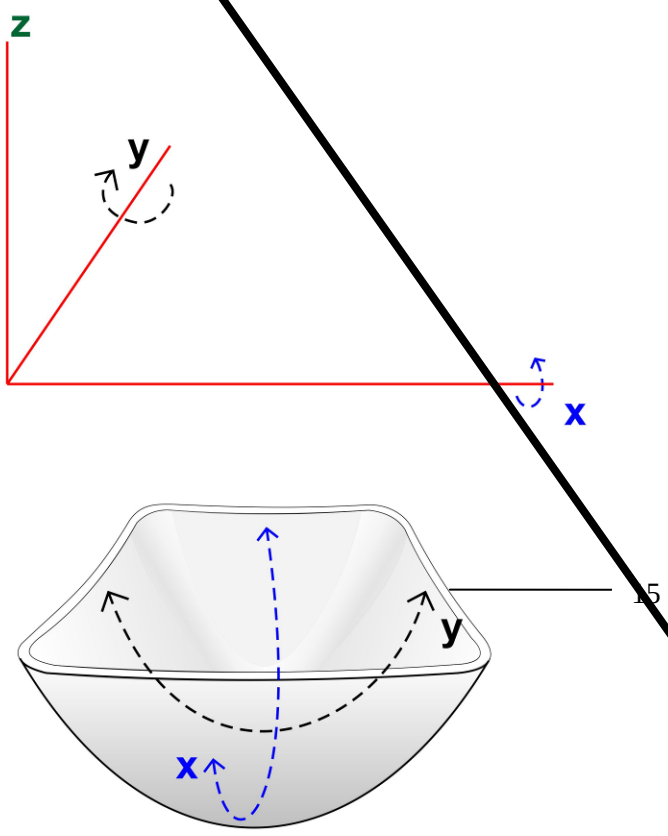

~~Fig. 8~~

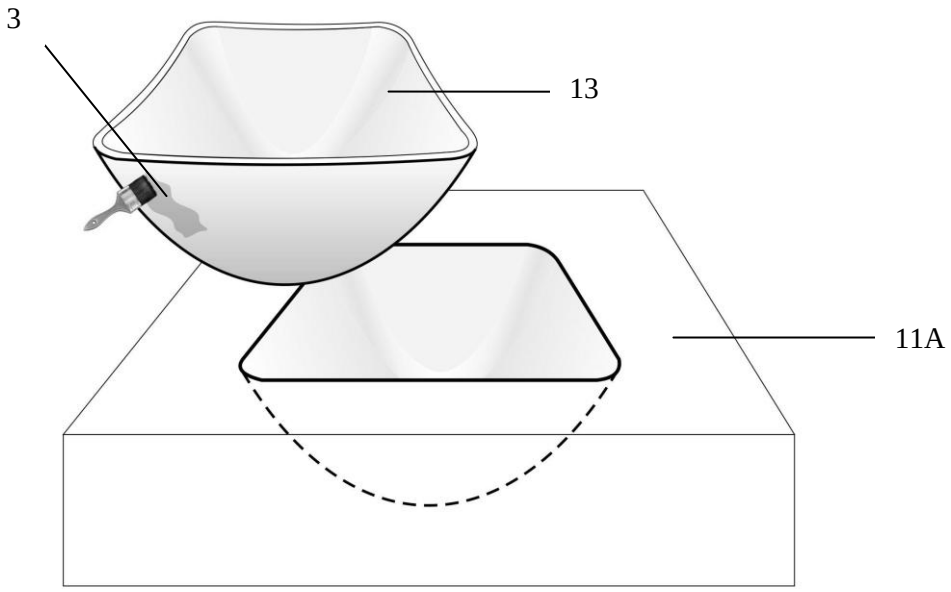

Fig. 7

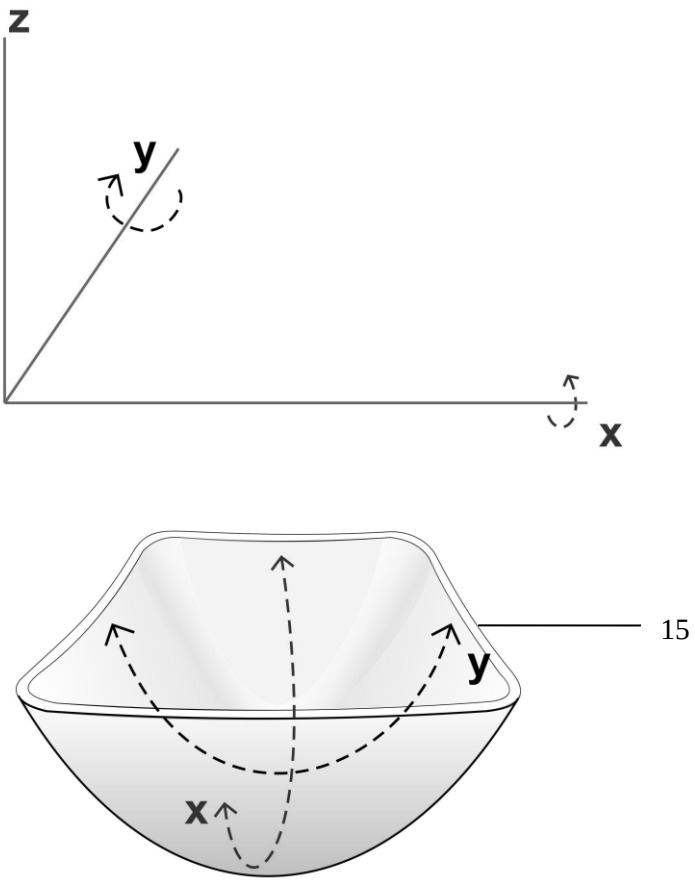

Fig. 8

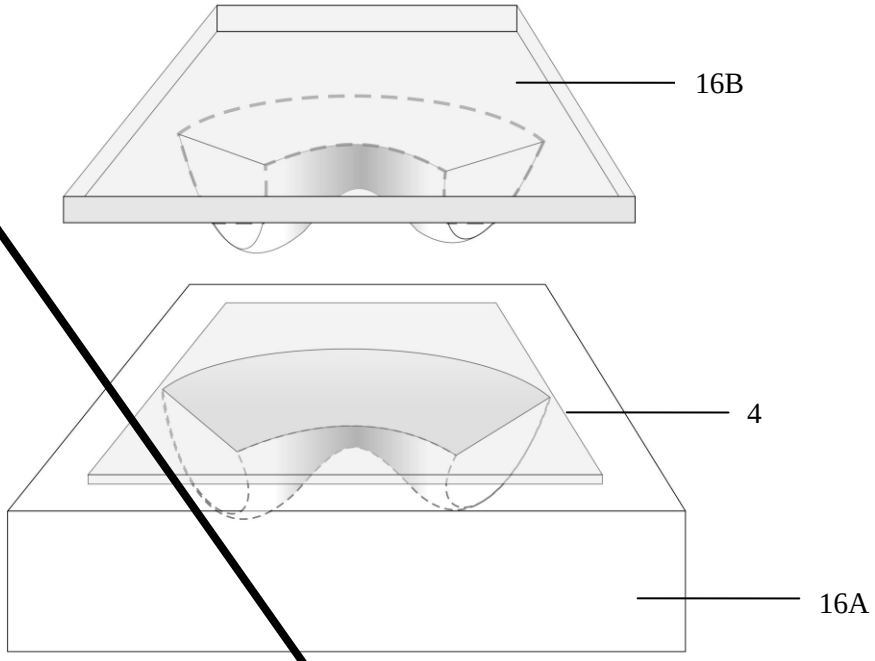

Fig. 9A

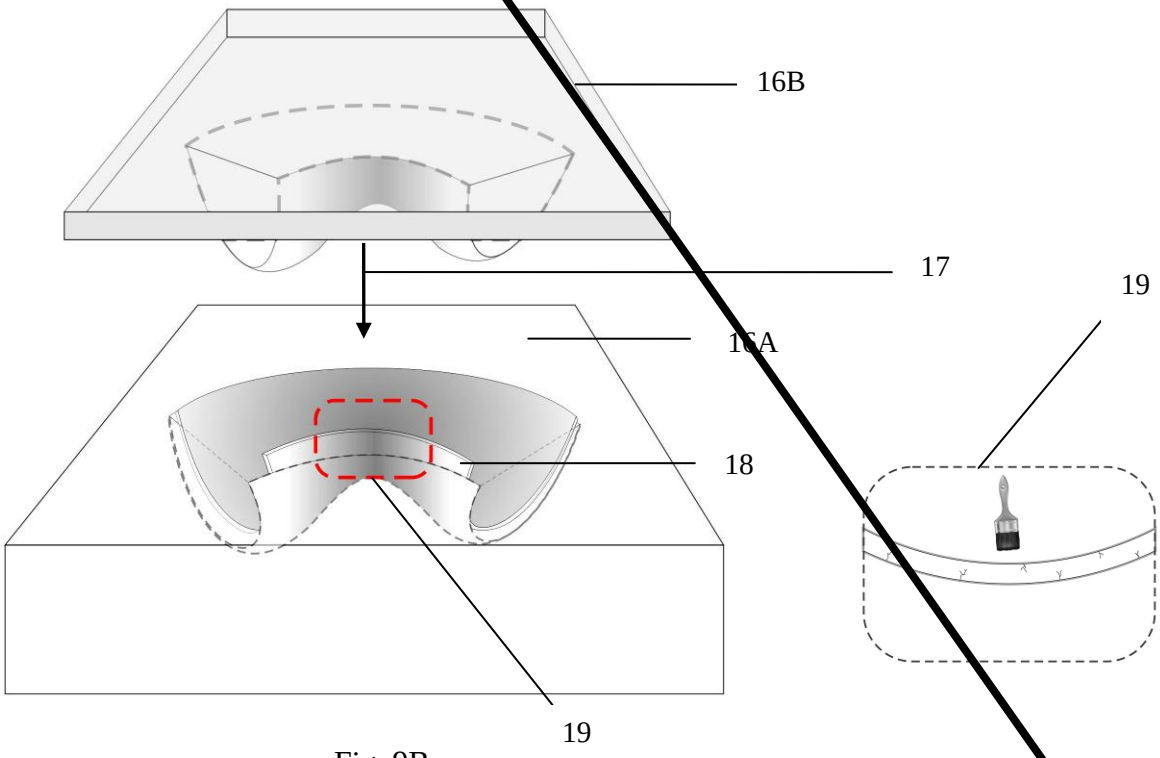

Fig. 9B

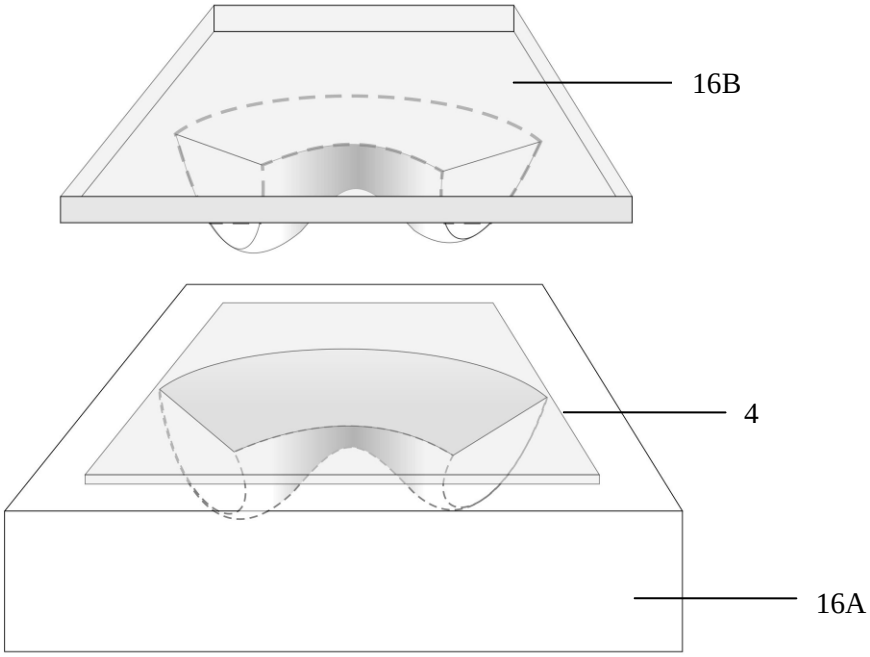

Fig. 9A

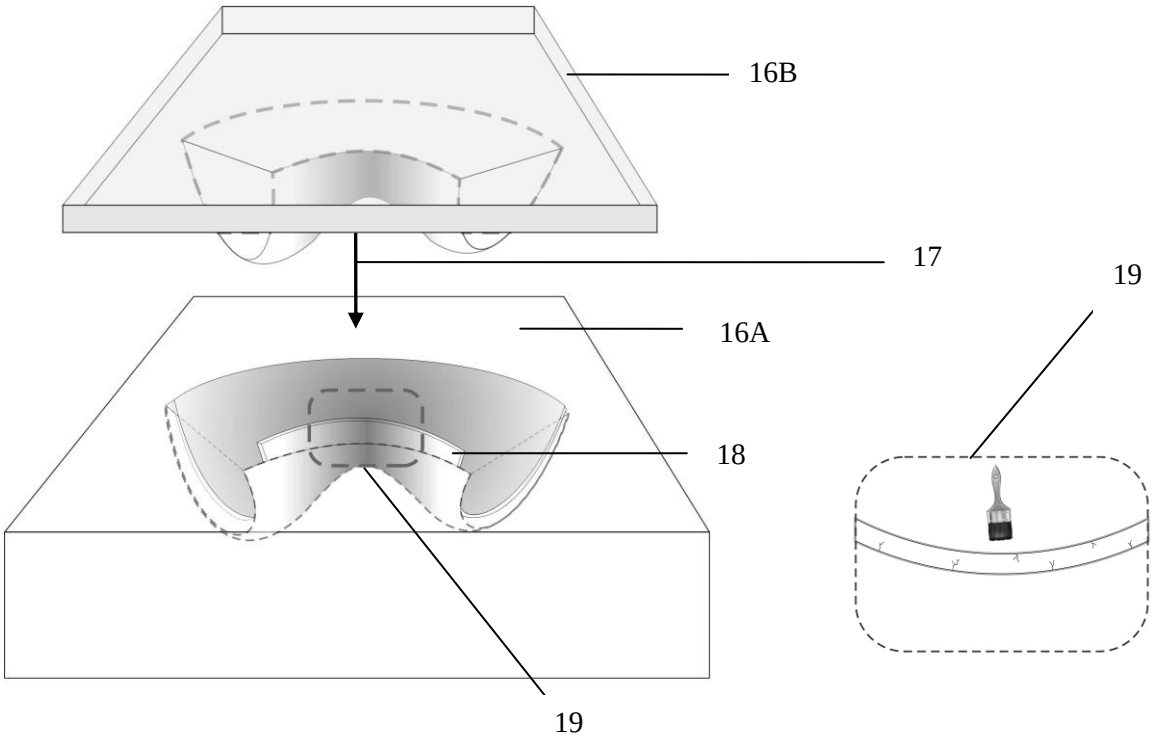

Fig. 9B

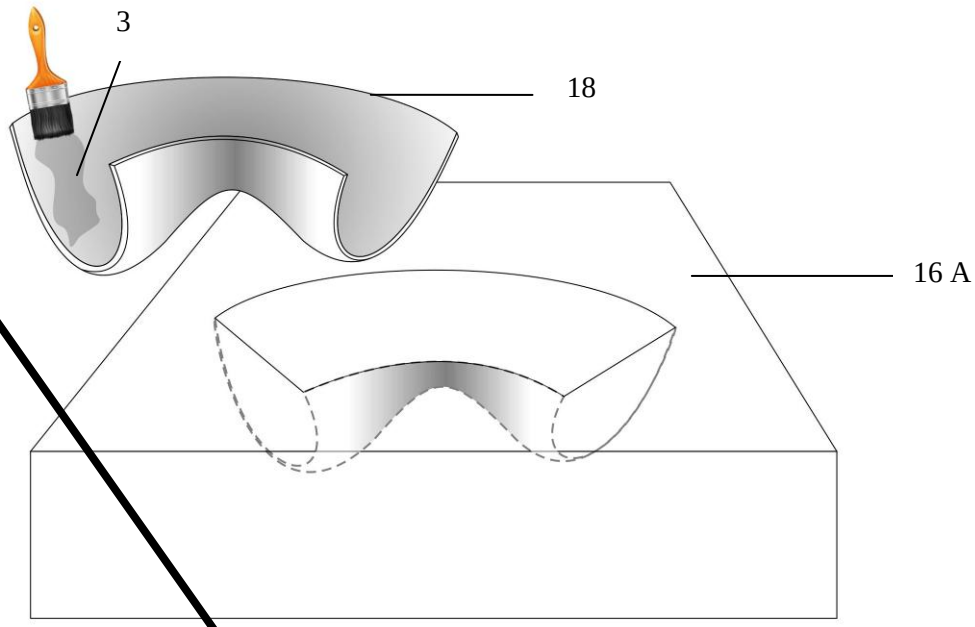

~~Fig. 10~~

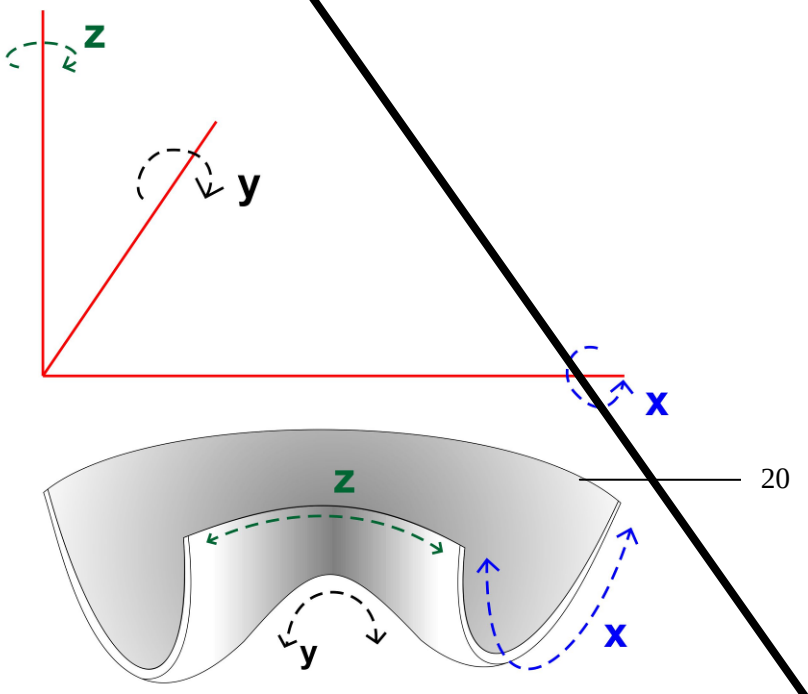

~~Fig. 11~~

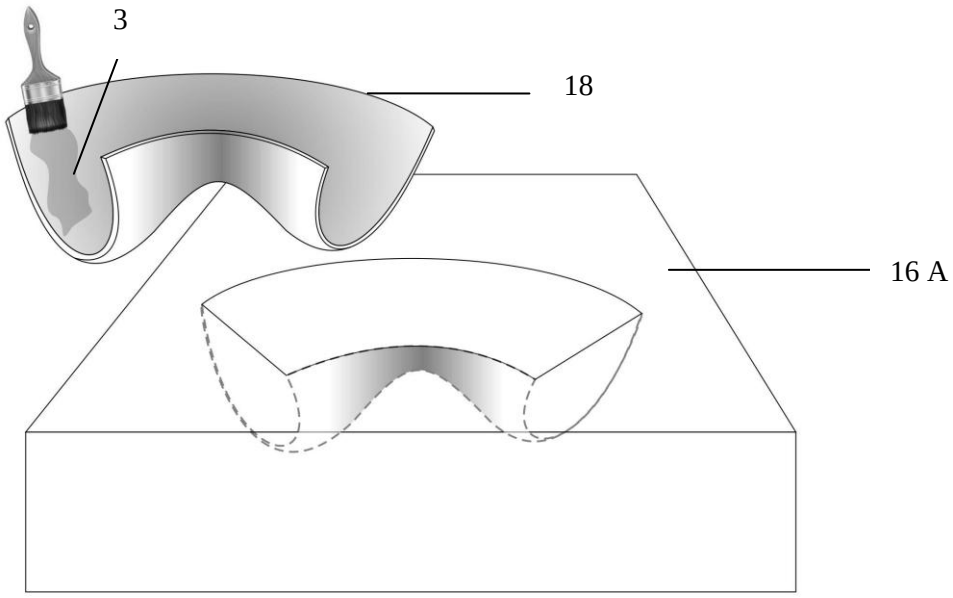

Fig. 10

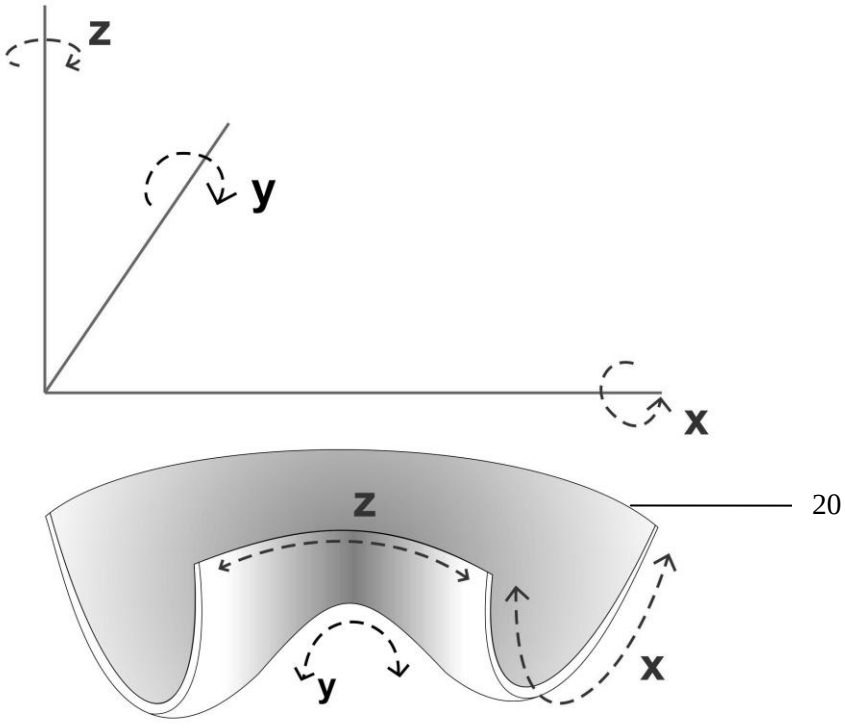

Fig. 11

Production Flow Chart

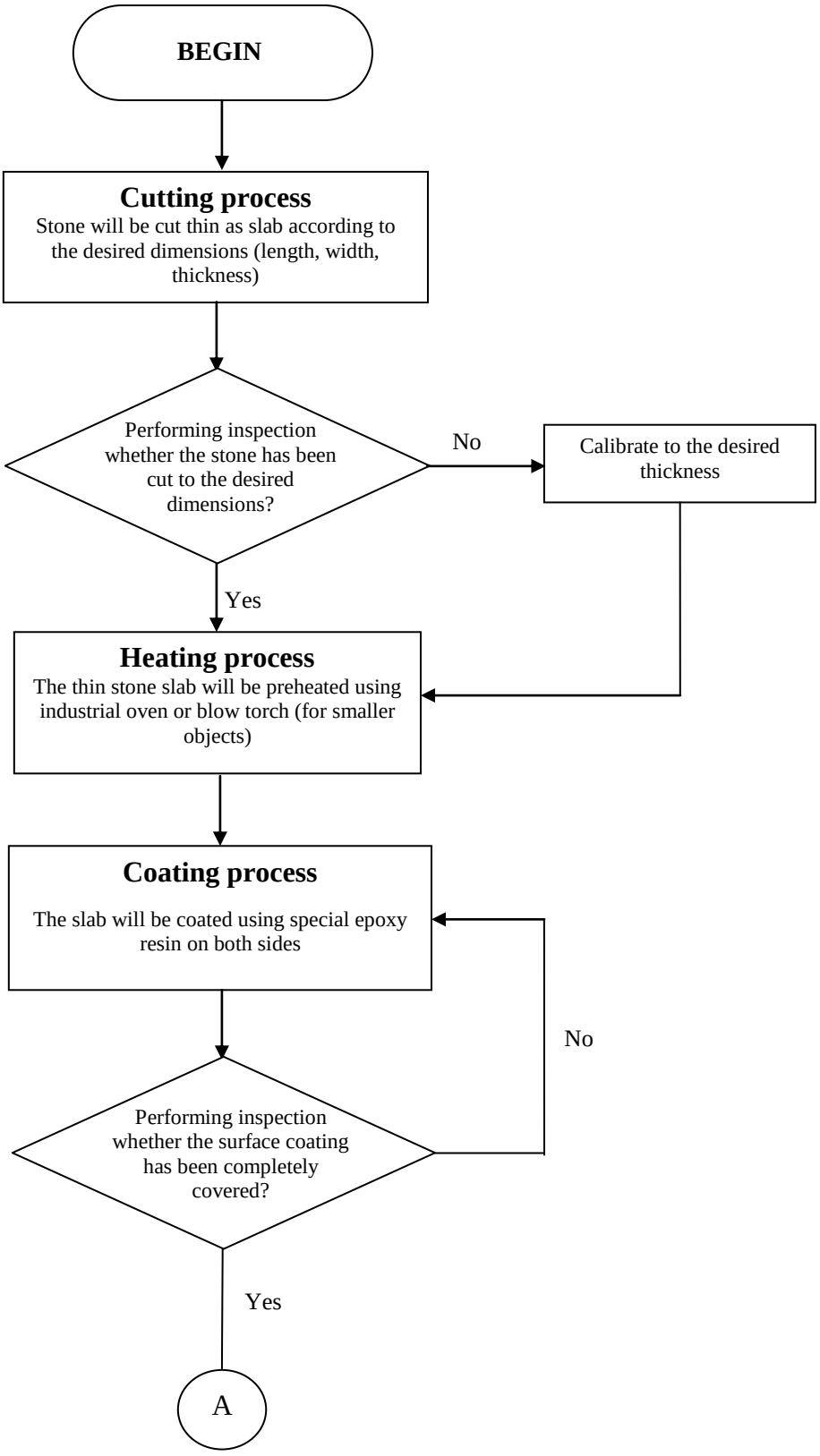

Fig. 12

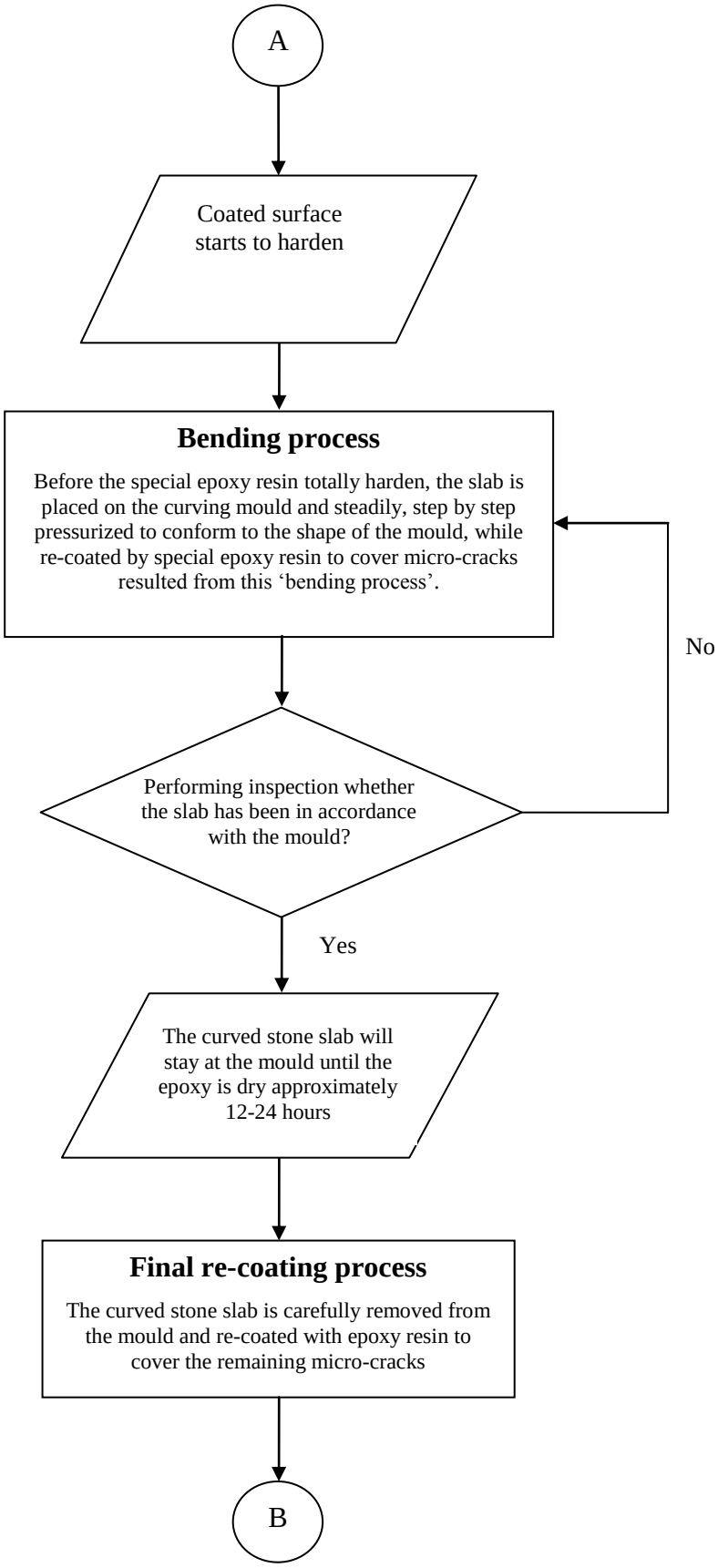

Fig. 12 (continued)

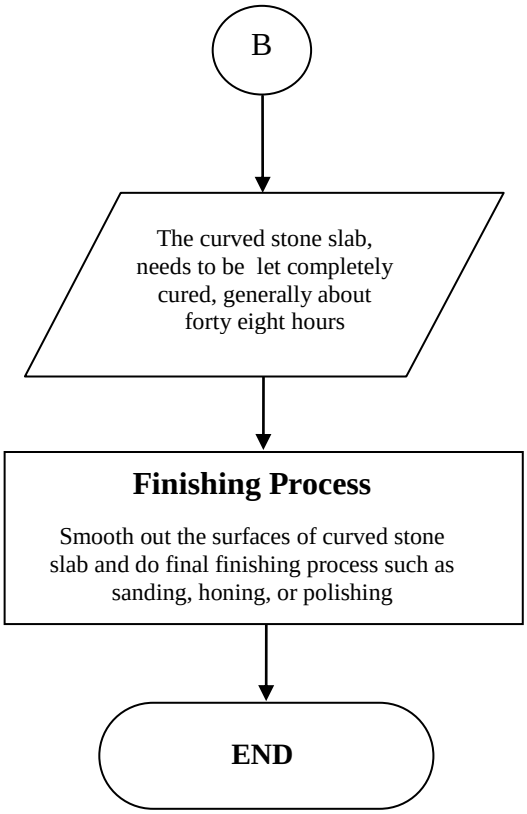

Fig. 12 (continued)