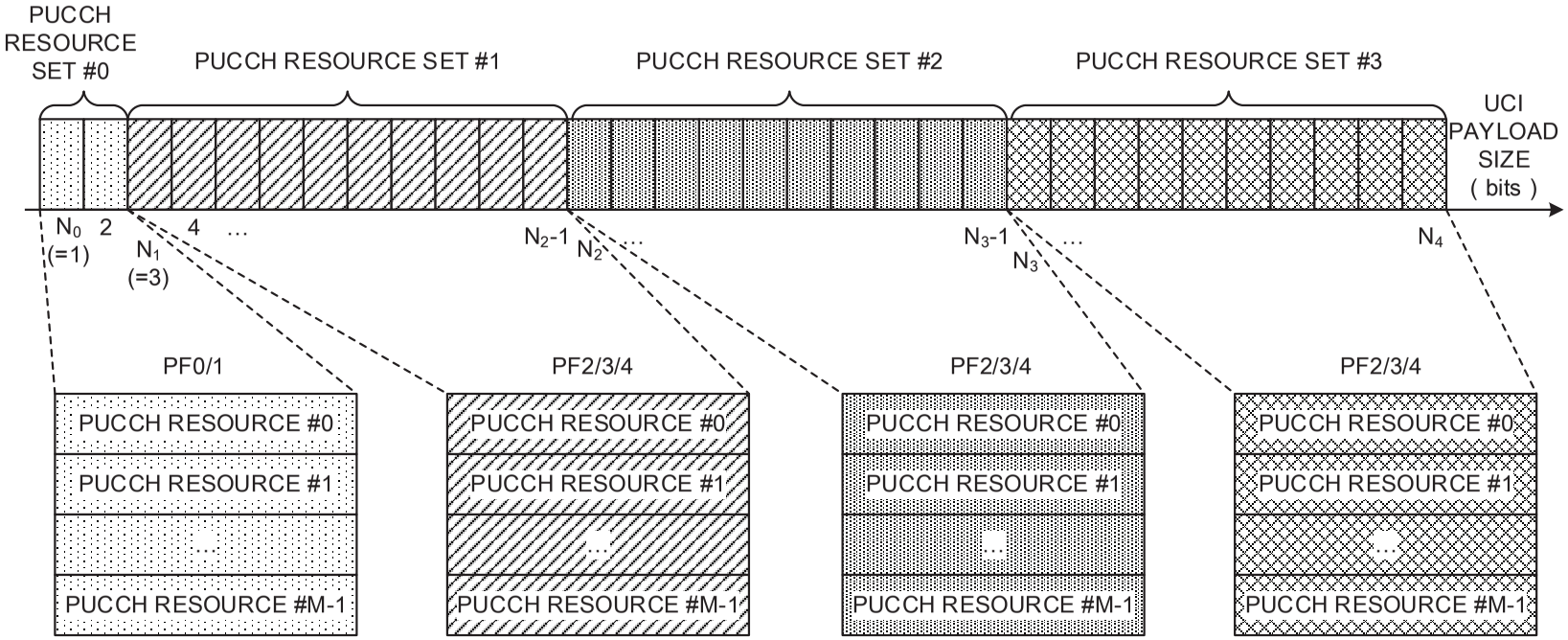
PUCCH RESOURCE SET #0
PUCCH RESOURCE SET #1
PUCCH RESOURCE SET #2
PUCCH RESOURCE SET #3
UCI PAYLOAD SIZE (bits)
N0 (=1)
2
N1 (=3)
4
…
N2-1
N2
…
N3-1
N3
…
N4
PF0/1
PF2/3/4
PF2/3/4
PF2/3/4
PUCCH RESOURCE #0
PUCCH RESOURCE #1
…
PUCCH RESOURCE #M-1
PUCCH RESOURCE #0
PUCCH RESOURCE #1
…
PUCCH RESOURCE #M-1
PUCCH RESOURCE #0
PUCCH RESOURCE #1
…
PUCCH RESOURCE #M-1
PUCCH RESOURCE #0
PUCCH RESOURCE #1
…
PUCCH RESOURCE #M-1

FIG. 1

FIG. 2A

PUCCH RESOURCE	CERTAIN FIELD VALUE IN DCI
PUCCH RESOURCE #0	000
PUCCH RESOURCE #1	001
PUCCH RESOURCE #2	010
PUCCH RESOURCE #3	011
PUCCH RESOURCE #4	100
PUCCH RESOURCE #5	101
PUCCH RESOURCE #6	110
PUCCH RESOURCE #7	111

FIG. 2B

PUCCH RESOURCE	CERTAIN FIELD VALUE IN DCI
PUCCH RESOURCE #0	000
PUCCH RESOURCE #1	001
PUCCH RESOURCE #2	010
PUCCH RESOURCE #3	011

FIG. 2C

PUCCH RESOURCE	CERTAIN FIELD VALUE IN DCI
PUCCH RESOURCE #0	000

FIG. 2

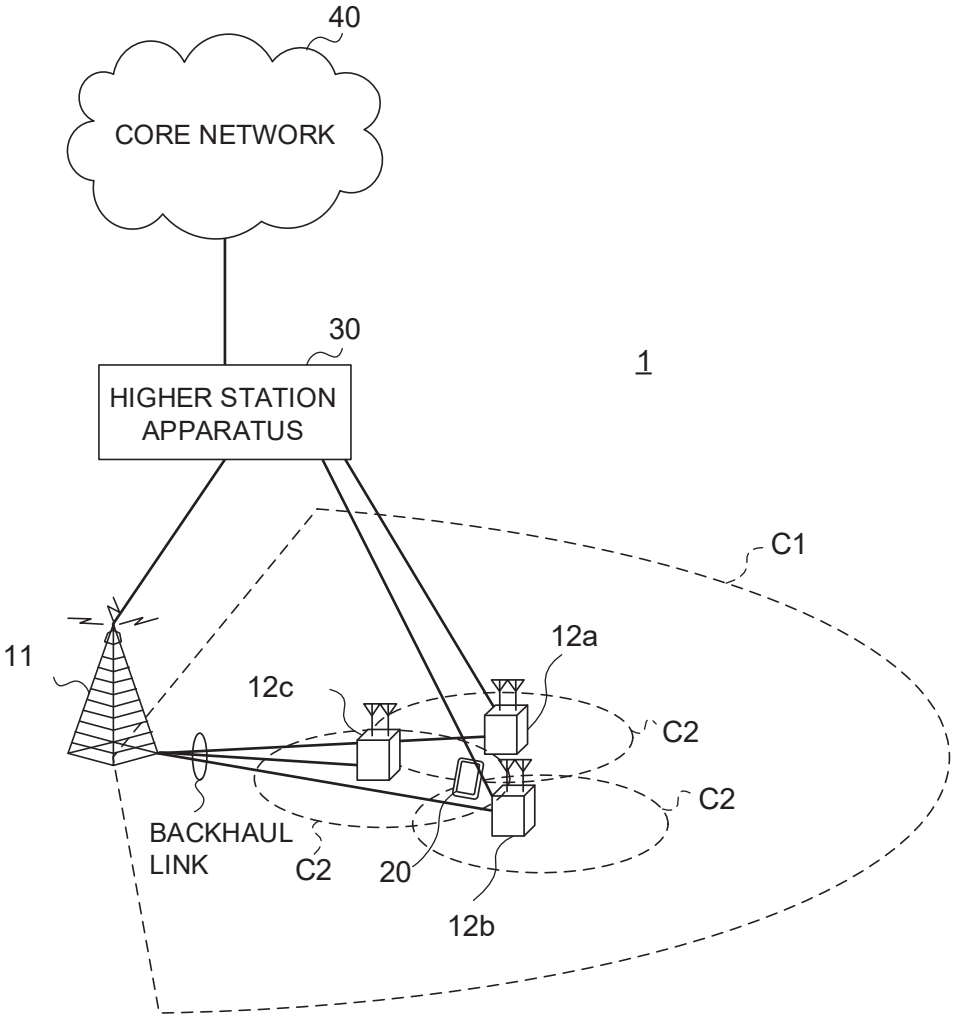
40
CORE NETWORK
30
HIGHER STATION APPARATUS
1
C1
11
12a
12c
C2
C2
BACKHAUL LINK
C2
20
12b

FIG. 3

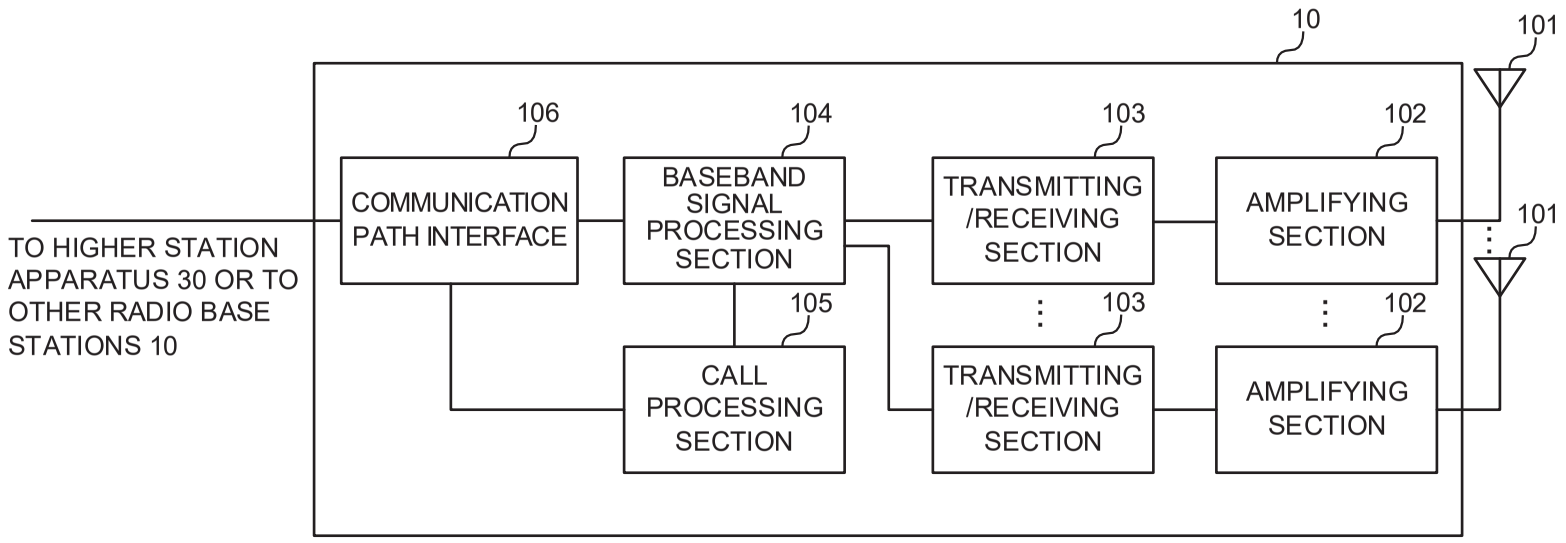
10
101
101
106
104
103
102
TO HIGHER STATION APPARATUS 30 OR TO OTHER RADIO BASE STATIONS 10
COMMUNICATION PATH INTERFACE
BASEBAND SIGNAL PROCESSING SECTION
TRANSMITTING /RECEIVING SECTION
AMPLIFYING SECTION
105
103
102
CALL PROCESSING SECTION
TRANSMITTING /RECEIVING SECTION
AMPLIFYING SECTION

FIG. 4

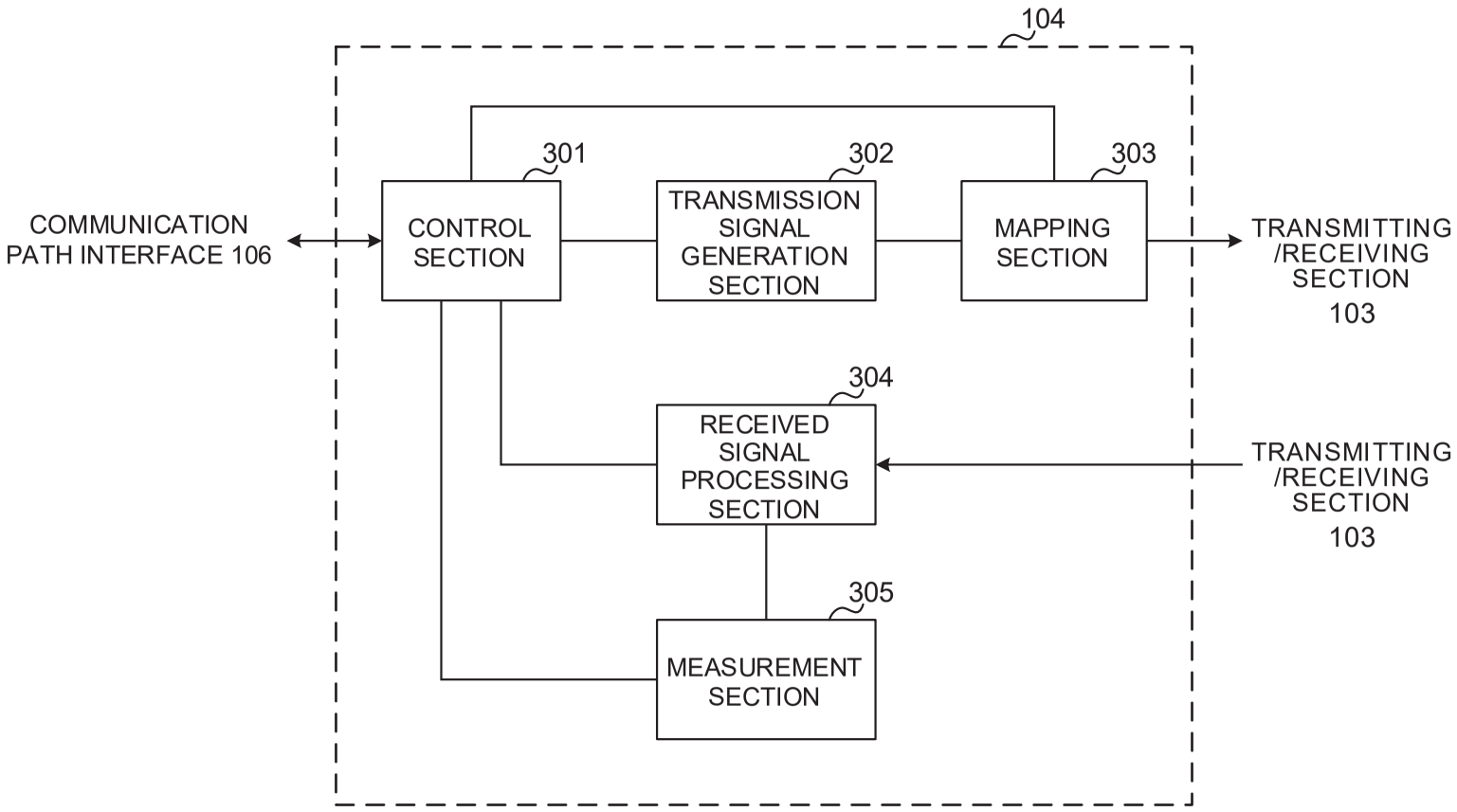
104
301
302
303
COMMUNICATION PATH INTERFACE 106
CONTROL SECTION
TRANSMISSION SIGNAL GENERATION SECTION
MAPPING SECTION
TRANSMITTING /RECEIVING SECTION 103
304
RECEIVED SIGNAL PROCESSING SECTION
TRANSMITTING /RECEIVING SECTION 103
305
MEASUREMENT SECTION

FIG. 5

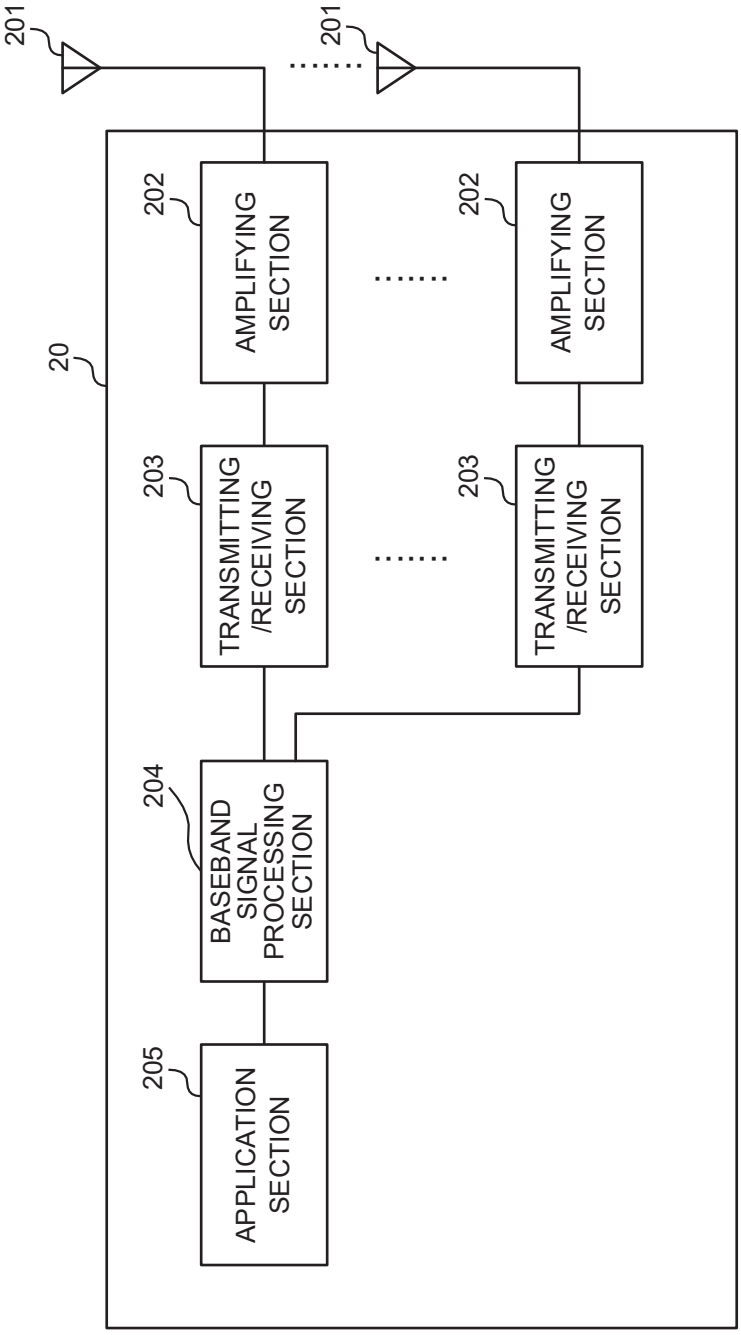
20
201
201
202
AMPLIFYING SECTION
202
AMPLIFYING SECTION
203
TRANSMITTING /RECEIVING SECTION
203
TRANSMITTING /RECEIVING SECTION
204
BASEBAND SIGNAL PROCESSING SECTION
205
APPLICATION SECTION

FIG. 6

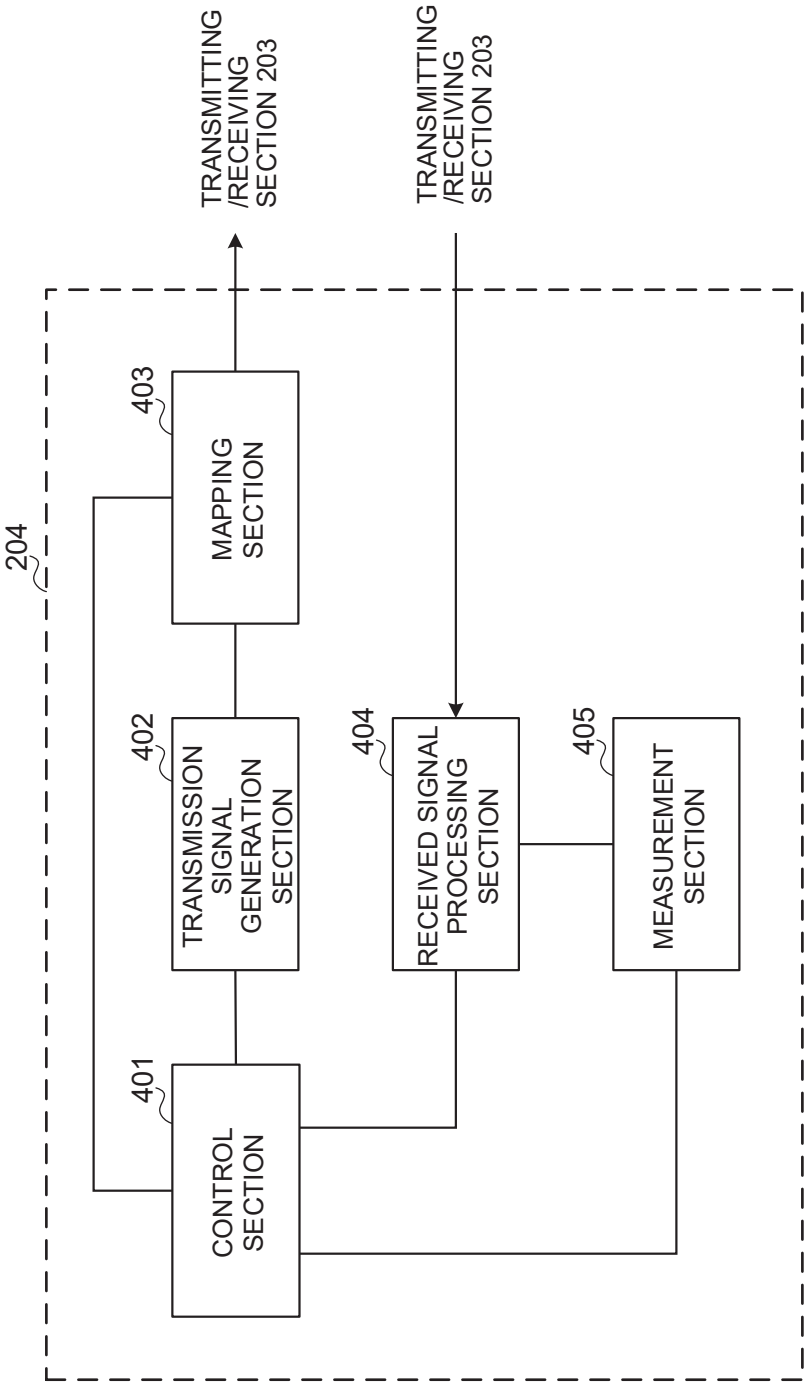
204
401
CONTROL SECTION
402
TRANSMISSION SIGNAL GENERATION SECTION
403
MAPPING SECTION
TRANSMITTING /RECEIVING SECTION 203
404
RECEIVED SIGNAL PROCESSING SECTION
405
MEASUREMENT SECTION
TRANSMITTING /RECEIVING SECTION 203

FIG. 7

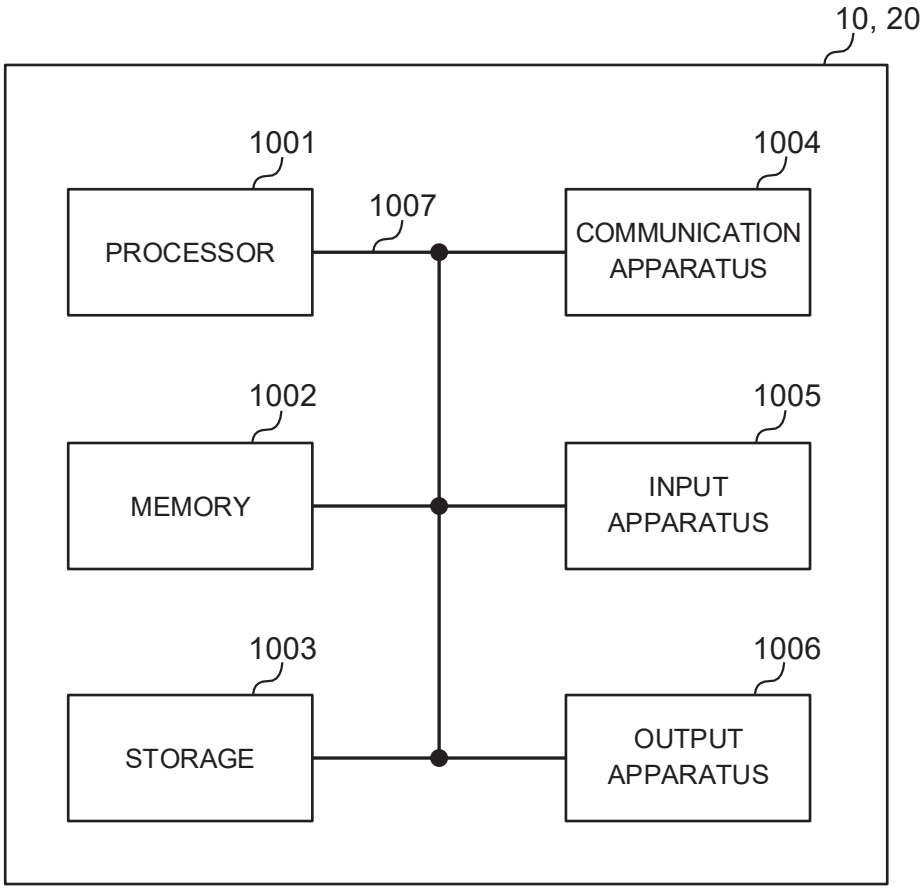
10, 20
1001
PROCESSOR
1007
1004
COMMUNICATION APPARATUS
1002
MEMORY
1005
INPUT APPARATUS
1003
STORAGE
1006
OUTPUT APPARATUS

FIG. 8