(12) INTERNATIONAL APPLICATION PUBLISHED ACCORDING TO THE PATENTS COOPERATION TREATY (PCT)

(19) World Intellectual Property Organization

International Office

(43) International publication date

October 6, 2005 (10.06.2005) PCT

(10) International publication number

WO 2005/092705 A1

(51) Patents International Classification[7]:

B64D 11/06

(21) International Application Number:

PCT/FR2004/000884

(22) International Filing Date: April 9, 2004 (04.09.2004)

(25) Filing Language: French

(26) Publishing Language: French

(30) Data regarding priority:

04/01958 February, 26 2004 (02.26. 2004) FR

(71) Applicant: AIRBUS [FR/FR]; 1, Rond-Point Maurice Bellonte, F-31700 Blagnac (FR).

(72) Inventors: SAINT-JALMES, Bruno; 35, rue Saint Luc, F- 31400 Toulouse (FR). REZAG, André; 17, rue Maurice Melat, Appt 7622, F-31200 Toulouse (FR). REZAG, André; 3, rue Maurice Melat, Appt 7622, F-31000 Toulouse (FR).

(74) Agent: SANTARELLI; Immeuble Innopolis A, BP 388, F-31314 Labège Cedex (FR).

(81) Designated states *(except otherwise indicated, for all available national protective title):* AE, AG, AL, AM, AT, AU, AZ, BA, BB, BG, BR, BW, BY, BZ, CA, CH, CN, CO, CR, CU, CZ, DE, DK, DM, DZ, EC, EE, EG, ES, FI, GB, GD, GE, GH, GM, HR, HU, ID, IL, IN, IS, JP, KE, KG, KP, KR, KZ, LC, LK, LR, LS, LT, LU, LV, MA, MD, MG, MK, MN, MW, MX, MZ, NA, NI, NO, NZ, OM, PG, PH, PL, PT, RO, RU, SC, SD, SE, SG, SK, SL, SY, TJ, TM, TN, TR, TT, TZ, UA, UG, US, UZ, VC, VN, YU, ZA, ZM, ZW.

(Continued next page)

(54) Title: INTERNAL LAYOUT OF AN AIRCRAFT CABIN

(54) Titre : AMENAGEMENT INTERIEUR D'UNE CABINE D'AERONEF

WO 2005/092705

WO 2005/092705 A1

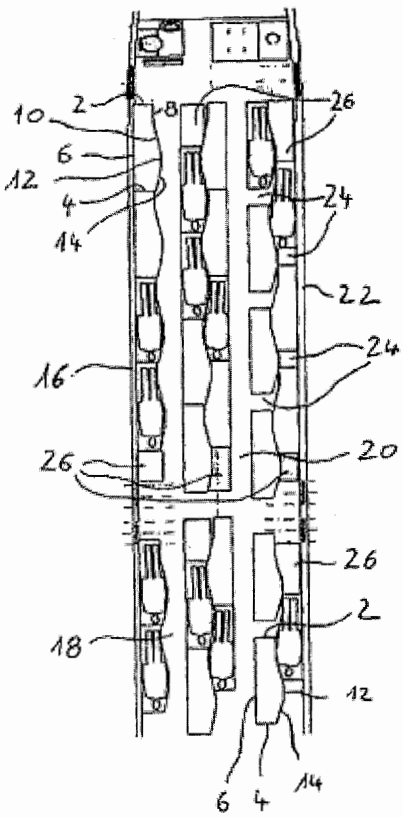

(57) Abstract: The invention relates to an internal layout for an aircraft cabin, consisting of an aircraft seat assembly which is intended to be disposed in the cabin and which comprises at least two adjacent columns of seats. According to the invention, the seats are disposed one behind the other in each of the seat columns. In addition, each seat can be converted into a bed, such as to form an essentially elongated sleeping surface. Moreover, when converted into a bed, each seat comprises a first sleeping part (12) and at least one second sleeping part (8) which is narrower than the first part (12). The seats are arranged in two adjacent columns in a staggered manner, such that the first part (12) of a seat from one column is disposed opposite a second narrower part (8) of a seat from the second row.

(57) Abrégé : Cet aménagement présente un ensemble de sièges d'aéronef destiné à équiper une cabine d'aéronef, comportant au moins deux colonnes de sièges voisines. Les sièges sont disposés les uns derrière les autres dans chacune des colonnes de sièges. De plus, chaque siège est convertible en couchette de manière à présenter une surface de couchage sensiblement allongée. Chaque siège lorsqu'il est converti en couchette présente une première partie de couchage (12) et au moins une seconde partie de couchage (8) de largeur moindre par rapport à la première partie (12). Dans deux colonnes voisines les sièges sont disposés en quinconce, de telle sorte que la première partie (12) d'un siège d'une colonne se trouve face à une seconde partie (8) de largeur moindre d'un siège de la seconde colonne.

(84) Designated states *(except otherwise indicated, for all available regional protective title):* ARIPO (BW, GH, GM, KE, LS, MW, MZ, SD, SL, SZ, TZ, UG, ZM, ZW), Eurasian (AM, AZ, BY, KG, KZ, MD, RU, TJ, TM), European (AT, BE, BG, CH, CY, CZ, DE, DK, EE, ES, FI, FR, GB, GR, I-IU, IE, IT, LU, MC, NL, PL, PT, RO, SE, SI, SK, TR), OAPI (BF, BJ, CF, CG, CI, CM, GA, GN, GQ, GW, ML, MR, NE, SN, TD, TG).

Published

- with report of international research

With regard to the two letter codes and other abbreviations, please refer to the "Explanatory Notes Relative to Codes and Abbreviations" listed at the beginning of every plain number of the PCT record

An aircraft cabin interior layout

The present invention concerns an aircraft cabin interior layout.

The domain of the present invention is the interior layout of aircrafts intended for passenger transportation and more especially aircrafts exploited commercially by the airlines. In such an aircraft, every passenger is provided with a seat but according to the class in which this seat is located the comfort of this seat is more or less. For instance, some aircrafts include three classes commonly called economic class, business class, and first class.

Generally, for all classes of comfort, seats are arranged, in rows transverse in relation to the airplane axis (or the airplane moving direction) as well as in longitudinal columns.

To make their airplane fleets profitable, airlines have a double concern. They wish, on the one hand, to have the largest number possible of passengers travel in a given space (the aircraft cabin) and on the other hand they wish to satisfy and win their customers over by offering them the best possible performances in terms of comfort and space. Several documents, such as for example WO-03/053735 and FR-2 843 730, have proposed aircraft cabin interior layout optimizing the available space in such cabin.

The present invention concerns more specifically the business class and first class compartments in which passengers may travel in lying position. Document EP-1 364 874 reveals an individual module for aircraft passenger that, combined with others similar modules, permits to occupy in an optimized way the available space in an aircraft cabin while conforming to technical constraints imposed by aeronautic norms. Figures of this document show combinations of modules permitting to fit a large number of passengers in a cabin. However, in the proposed layout, some seats are oriented in the moving direction of the aircraft while of others are oriented in the opposite direction.

The goal of the present invention is therefore to provide an aircraft cabin layout permitting to fit a maximum number of passengers in a given space, all seats destined to accept passengers in this layout being oriented in the same direction.

To this effect it proposes a set of aircraft seats intended to equip an aircraft cabin, including at least two columns of neighboring seat, the seats being arranged one behind another in each of the seat columns and every seat being convertible into berth in order to present an appreciably stretched out bedding surface.

According to the invention, each seat when converted into berth presents a first bedding part and at least a second bedding part less broad than the first part; in two adjacent columns, seats are arranged in a staggered manner, such that the first part of a seat from one column is placed opposite to a second narrower part of a seat from the second column.

This staggered seats disposition, combined with seats not presenting, once converted into berth, a constant width, fits a larger number of seats in a given space without downgrading the comfort of the passengers. The part with the larger width of the seat converted into berth is preferably intended for receiving a passenger's torso while the narrower parts of the berth receive notably the passenger's head and legs. The bedding surface is not necessarily plane. The seat of concern here can be a reclining seat not forming an appreciably horizontal bedding surface in its "most reclined" position.

An advantageous form of realization provides that each seat, when converted into berth, presents an appreciably straight longitudinal side. Such seats may hence be adjusted to form columns either along a passageway or along a cabin wall. In this form of realization, the set of aircraft seats according to the invention include, for example, at least two types of seats, a first type of seats presenting a straight longitudinal side placed to the right of a passenger occupying aforesaid seat and a second type of seats presenting a straight longitudinal side placed to the left of the passage occupying the same position on this seat. It can be expected then that seats of a same column are for example all of a same type.

In a first form of realization seats of a same column of seats are spaced one from another so that when they are converted into berth, the spaces separating them is less than about ten centimeters. In that way, the loss of room in the cabin is minimized and then a larger number of seats is fitted in a given space.

In another form of realization, seats of a same column of seats are spaced one from another so that when they are converted into berth, the spaces separating them

allow for a passenger's passageway. This configuration may be used notably when the set of seats according to the invention are against a cabin wall. Thanks to the provided passageways, access to the seats of the seat column set along the cabin wall is possible without the passengers occupying these seats close to the wall having to apologize to the passengers installed on the other column seats.

In the case where seats of a same column of seats are spaced one from another, a luggage bin may be arranged between two neighboring seats of this column. For example it pertains here to a column of seats set along a cabin wall.

A set of aircraft seats according to the invention includes for example two columns of seats.

In this case, when seats present a straight longitudinal side, this set of seats is delimited for example by a longitudinal passageway and the straight longitudinal side of the seats is on the side of aforesaid passageway.

A set of aircraft seats according to the invention may also includes three columns of seats.

In this case, the seats of a same column of seats are conveniently spaced one from another so that when they are converted into berth, the spaces separating them allow for a passenger's passageway. In this way, it is possible to reach the central column of seats without having to apologize to the passengers in the lateral columns. In this form of realization, since the free space between seats of the central column is not useful for a passenger's passageway, this space is advantageously used for storage.

A set of three columns of seats provides for example that the seats of each lateral column of seats are spaced one from another so that when they are converted into berth, the spaces separating them allows for a passenger's passageway, and that the seats of the central column of seats presents, when they are converted into berth, a length greater than the seats length of the lateral columns when they are converted into berth. These seats of greater length can then be proposed to large size passengers.

A set of three columns of aircraft seats are preferably delimited longitudinally by two passageways in order to facilitate the access to all seats of this assembly. The seats of the lateral columns then advantageously present an appreciably straight longitudinal side on the corresponding passageway side. Such an assembly can

present a longitudinal symmetry axis.

In a set of three columns of aircraft seats according to the invention, the seats of the central column can be staggered longitudinally in relation to the seats of a lateral column while they may be aligned with the seats of the other lateral column. It is also possible to have the central column seats staggered longitudinally in relation to the seats of both lateral columns but with a different stagger.

The present invention also proposes a set of aircraft seats including four columns of seats.

Such an assembly is made for example of two sets of two columns of seats as described above.

Seats of a same column of seats of a set of four columns of seats are preferably spaced one from another so that, when they are converted into berth, the spaces separating them allow for a passenger's passageway. In this manner, it is possible to reach all seats of this assembly without having to disturb the already installed passengers. In such a configuration, the free space left between the central columns seats may be used to fit a luggage bin since it is useless for a passengers' passageway.

Another form of realization of a four seats assembly provides that the seats of each lateral column of seats are spaced one from another so that, when they are converted into berth, the spaces separating them allows for a passenger's passageway, and that the seats of the central columns of seats present, when they are converted into berth, a greater length than the length of the lateral column seats when they are converted into berth. These central column seats may then welcome passengers of larger size.

In a four columns of seats configuration, it may also be provided that seats of one of the central columns are aligned in relation to the seats of the other central columns but are staggered in relation to the seats of the corresponding lateral column of seats.

The present invention also concerns an aircraft, characterized in that it includes a set of seats such as describes here above.

The details and advantages of the present invention will be more evident in the description that follows, reference made to the schematic drawing in appendix in which Figure 1 represents schematically in plan view a section of an aircraft cabin

presenting five columns of seats,

Figure 2 is a view similar to Figure 1 for a cabin presenting seven columns of seats,

Figure 3 is a variant of the cabin layout represented in Figure 2, and

Figure 4 is a schematic plan view of a section of an aircraft cabin including eight columns of seats.

The figures of the drawing are representing an aircraft cabin compartments in which convertible seats are laid out. In such a disposition, a traveler occupying such a compartment may travel in a seated position as well as in a stretched out, or almost stretched out position.

In plan view, every seat represented in the drawing, when converted into berth (plane or almost plane), has a contour adapted to the human morphology. The berth part intended for receiving a passenger's torso is wider while the berth parts intended for receiving the passenger's head and legs are narrower. Although not represented in the drawing, it is quite possible here to consider using modules such as those revealed in document EP-1 364 874.

In the attached drawing, each seat, when converted into berth, presents a contour having the same shape (save one symmetry). This contour (Figure 1) presents first of all two straight transverse extremities. A first extremity 2 lays on the berth side intended to receive a traveler's feet, whereas the other transverse extremity 4 lays at the extremity of the berth intended to receive this traveler's head. These transverse extremities are represented straight. One may however consider other forms here: rounded angles, entirely rounded, elliptic, etc....

These transverse extremities 2, 4 are joined by longitudinal sides. A first longitudinal side is straight and extends perpendicularly to transverse sides 2, 4. This straight longitudinal side is called in continuation with straight side 6 description.

The other longitudinal side presents a dogleg shape. First of all, from transverse side 2, this dogleg extends toward transverse side 4 while forming a first section 8 appreciably parallel to straight side 6. It results in a narrow berth part. Second section 10 of the dogleg forming the second longitudinal side creates a widening of the berth. The corresponding part of the berth receives for example a traveler's thighs and

pelvis.

A third section 12 of the longitudinal dogleg side is again parallel to straight side 6. This section corresponds for example to the part of the berth intended to receive a traveler's bust.

Finally, the last and fourth section 14 of the dogleg forming the second longitudinal side realizes a narrowing of the berth width. The part of the berth corresponding to this last and fourth section 14 is intended to receive notably a traveler's head.

It is noticed on the different figures of the drawing that there are two types of seat. The first type of seat is such that when a traveler lies down on his back on the berth, his/her head being then toward the rear of the aircraft, straight side 6 is to his/her right. For the other type of seat, under the same conditions, straight side 6 of the corresponding berth is to the traveler's left.

On Figure 1, five columns of seats are represented. It is meant here and in the rest of the description by columns of seats, as a set of seats arranged longitudinally one behind another in relation to the aircraft.

A first column of seats is arranged between left wall 16 of the cabin and a first passageway 18. In this column, seats are arranged one behind another so that, into berth position, a front transverse side 2 comes in contact, or nearly in contact, with a neighboring transverse side 4. A minimal space is left therefore between two neighboring seats of a same column converted into berth. In this column of seats, all seats are of a same type and straight side 6 of these seats is every time along left wall 16 of the cabin.

A set of two columns is located appreciably in the center of the cabin represented. This set is arranged between passageway 18 and a second passageway 20. In each of these columns, a same type of seat is found every time. For the seats of the column being on passageway 18 side, straight side 6 is located to the left of a passenger traveling in the moving direction of the aircraft whereas in the second column, located on the side of passageway 20, straight side 6 is placed to the right of a passenger traveling in the moving direction of the aircraft.

It is noticed on the drawing that the passengers of this set of two columns

are arranged staggered. Indeed, the seats of the columns are not arranged in order to obtain transverse rows, meaning perpendicular to the columns. Indeed, these two neighboring columns, in each of which the seats are set one following another in order to leave a minimum space between two neighboring seats converted into berth, are staggered in the longitudinal direction one in relation to the other. This shift is chosen so that the largest part of the berth, corresponding to third section 12 of a column, is located appreciably at the level of a narrower part of a berth seat of the neighboring column. Hence, at the center of both column assembly, the larger part of a seat in one column is at the level of the berth seat part corresponding to first section 8 of the neighboring column seat.

The last two columns of seats are arranged between passageway 20 and a right cabin wall 22. Columns of this set of seats are distinct from the columns described previously in that a space 24 is left free between two neighboring berth seats. This free space 24 is sufficient to allow for a traveler's passageway. In this manner, in the column adjoining passageway 20, passageways are arranged to allow for accessing the seats located along right cabin wall 22. The passengers with a seat along this right cabin wall 22 may therefore reach their seat without bothering a person installed on his/her seat in the column adjoining passageway 20.

A shift similar to the previously described shift for two neighboring columns is found for these two columns presenting free spaces 24. Indeed, as noticed on the drawing, except possibly for the seats located at the extremities of a column, the larger part of a seat, corresponding to third section 12, is at the level of a narrower part, in the present case the part corresponding to first section 8.

Considering the existing shift between the various columns, spaces 26 remain without seats. They may be used to provide for storage bins.

On Figure 2, the represented aircraft cabin includes seven columns of seats. In this configuration, three passageways with references 28, 30 and 32 are found. Here as well, a left cabin wall 16 and a right cabin wall 22 are found. The column of seats located along left cabin wall 16 is similar to the column of seats located along left cabin wall 16 of Figure 1. Similarly, the set of two columns of seats being between passageways 28 and 30, respectively 30 and 32, are similar to the set of two columns of

seats represented in Figure 1 between passageways 18 and 20. The set of two columns of seats being on the side of right cabin wall 22 are also similar the one in Figure 1 also located along right cabin wall 22.

One notices on this Figure 2 that, for columns located along cabin walls 16 and 22, toward the front of the aircraft, seats are not perfectly aligned one behind another but the column shape adjusts to the shape of the corresponding cabin wall. The seat shape allows here for a good fit to the cabin wall shape.

Figure 3 is a slight variant from layout realization in Figure 2 which allows for placing a larger number of seats in a same space.

Finally, in Figure 4, three passageways 28, 30 and 32 are found. The set of two columns of seats located each time between two passageways are similar to the set of two columns of seats arranged between two passageways in Figures 2 and 3. On the cabin wall side, there are each time here sets of two columns of seats, the seats being spaced one from another in a same column of seats.

Other configurations than those represented in the drawing may be considered. For example, in narrower cabins, four columns of seats with a single central passageway may be provided. One obtains then a configuration similar to that in Figure 4 without however the four central columns of seats.

Set of three or four columns of seats may also be provided. So in Figure 4 configuration for example, it is possible to suppress central passageway 30 and to adjoin one to the other both sets of two columns of seats located on each sides of this central passageway 30. This configuration presents the inconvenience that passengers installed into berth seats of the central columns of this set of four columns need to apologize to their neighbor if they want to reach or leave their seat. In order to avoid this inconvenience, it is then sufficient to create passageways between the seats as represented for example in Figure 4 for the columns of seats located on the side of cabin walls 16 and 22.

In these sets of four columns of seats, within each column there is same type of seats (straight side 6 on the right or on the left) and an alternate type of seats from one column to another. In this set of four columns of seats, a longitudinal shift between seats of two neighboring columns is found except for both central columns. For these

two columns, there may be either no shift or a shift identical to the existing shift between two other columns, or else a different shift.

As evoked above, it is also possible in the context of the invention to have sets of three columns of seats. Preferably, to facilitate the access to the seats in the central column, a space, such as spaces 24 in Figures 1 to 4, is provided each time between two neighboring seats of a same column of seats. It is also advantageously provided here to have in each column of seats only one type of seats and to alternate types of seats from one column to another. In such a configuration, with three columns of seats, it is possible to provide a longitudinal shift between two seats of two neighboring columns but it is also possible to have a shift for the columns of seats that are neighboring by their longitudinal sides of non straight seats and not to have a shift (or the same shift or a different shift) for the seats of columns neighboring by two straight sides.

In this configuration of three columns of seats, it may be advantageous to plan for a third type of seat for the central column. It would be a seat presenting a symmetrical shape in relation to its longitudinal axis. Each longitudinal side of such a seat would present a shape such as that described above in reference to Figure 1. The use of this third type of seat allows then for optimizing the width of the set of three columns of seats, meaning to offer the greatest comfort possible to passengers traveling on these seats while having the smallest global width possible for the three columns. One notices here that the spaces provided above between seats of a same column are not used for travelers' passageway with regard to spaces left free between the central column seats. These central column berth seats may then provide a longer bedding surface. Such a berth seat would then be reserved for a passenger of large size. The free spaces between seats of this central column may also be used for storing luggage. According to the layout retained for the cabin interior, if enough storage spaces are provided in this way, it becomes possible to suppress any luggage bin placed above head.

The remarks made above on the use of the space left free between two berth seats of the central column of a set of three columns of seats (realizing a longer bedding surface or storage space) may apply also to the central columns of a set of four columns of seats described above.

The forms of realization presented here above permit to reach all described seats without disturbing a passenger installed on another seat.

The seat shape, when they are converted into berth, may of course vary from the shapes described above. One may, for example, also use seat modules such as those revealed in the EP-1 364 874 A1 document. Referring to Figure 5A of that document, which is also the abstract figure, a module such as those represented on this figure is considered. This module of the abstract figure presents a straight side (26) which is placed to the left of a traveler occupying the represented module. This module may cooperate with another similar module in which straight side (26) is to the right of the passenger traveling inside this module. These two modules are placed then side by side so that a first segment (28) of one of these modules comes to cooperate with a second segment (30) of the other module. Some configurations similar to those represented on figures 1 to 4 of the drawing are then found.

The present invention doesn't limit itself to the various forms of realization described above as non restrictive examples. It also concerns all alternative of realization accessible to the skilled man in the context of the claims hereafter.

The invention is therefore not limited to aircraft cabins capable to fit five, seven or eight columns of seats. The invention fit all widths of cabin and can be considered from a cabin in which three columns of seats may be positioned.

CLAIMS

1. Set of aircraft seats intended to equip an aircraft cabin, including at least two neighboring columns of seats, the seats being arranged one behind another in each column of seats and each seat being convertible into berth in order to present an appreciably stretched out bedding surface, characterized in that each seat, when it is converted into berth, presents a first bedding part and at least a second narrower bedding part in relation to the first part, in that two neighboring columns seats are arranged in staggered form, so that the first part of a seat of a column is facing a second narrower part of a seat in the second column.

2. Set of aircraft seats according to claim 1, characterized in that each seat, when converted into berth, presents a longitudinal side (6) appreciably straight.

3. Set of aircraft seats according to claim 2, characterized in that it includes at least two types of seats, a first type of seats presenting a straight longitudinal side (6) placed to the right of a passenger occupying aforesaid seat, and a second type of seats presenting a straight longitudinal side (6) placed to the left of the passage occupying the same position on this seat.

4. Set of aircraft seats according to claim 3, characterized in that the seats of a same column are all of a same type.

5. Set of aircraft seats according to one of claims 1 to 4, characterized in that seats of a same column of seats are spaced one from another so that when they are converted into berth, the spaces separating them is less than about ten centimeters.

6. Set of aircraft seats according to one of claims 1 to 4, characterized in that seats of a same column of seats are spaced one from another so that when they are converted into berth, the space (24) separating them allows for a traveler's passageway.

7. Set of aircraft seats according to one of claims 1 to 4, characterized in that seats of a same column of seats are spaced one from another and in that a luggage storage is arranged between two neighboring seats of this column.

8. Set of aircraft seats according to one of claims 1 to 7, characterized in that it includes two columns of seats.

9. Set of aircraft seats according to claims 2 and 8, characterized in that it is delimited by a longitudinal passageway (18, 20, 28, 30, 32), and in that the seat straight

longitudinal sides (6) are located on the side of aforesaid passageway (18, 20; 28, 30, 32).

10. Set of aircraft seats according to one of claims 1 to 7, characterized in that it includes three columns of seats.

11. Set of aircraft seats according to claims 10, characterized in that seats of a same column of seats are spaced one from another so that when they are converted into berth, the space (24) separating them allows for a traveler's passageway.

12. Set of aircraft seats according to claim 11, characterized in that free space (24) between the seats of the central column is used for storage space.

13. Set of aircraft seats according to claims 10, characterized in that the seats of each lateral column of seats are spaced one from another so that when they are converted into berth, the space separating them allows for a passenger's passageway, and that the seats of the central column of seats present, when they are converted into berth, a length greater than the seats length of the lateral columns when they are converted into berth.

14. Set of aircraft seats according to one of claims 10 to 13, characterized in that it is delimited longitudinally by two passageways (18, 20, 28, 30, 32).

15. Set of aircraft seats according to claim 14, characterized in that lateral column seats present a longitudinal side (6) appreciably straight on the side of the corresponding passageway.

16. Set of aircraft seats according to claim 15, characterized in that it presents a longitudinal symmetry axis.

17. Set of aircraft seats according to one of claims 10 to 15, characterized in that seats of the central column are staggered longitudinally in relation to the seats of a lateral column whereas they are aligned with the seats of the other lateral column.

18. Set of aircraft seats according to one of claims 10 to 15, characterized in that the seats of the central column are staggered longitudinally in relation to the seats of both lateral columns but with a different stagger.

19. Set of aircraft seats according to one of claims 1 to 7, characterized in that it includes four columns of seats.

20. Set of aircraft seats according to claim 19, characterized in that it is constituted of two sets of two columns of seats according to one of claims 8 or 9.

21. Set of aircraft seats according to one of claims 19 or 20, characterized in that

seats of a same column of seats are spaced one from another so that when they are converted into berth, the space (24) separating them allows for a traveler's passageway.

22. Set of aircraft seats according to claim 21, characterized in that the space left free between the central column seats is used to fit a luggage bin.

23. Set of aircraft seats according to claim 19, characterized in that the seats of each lateral column of seats are spaced one from another so that, when they are converted into berth, the space separating them allows for a passenger's passageway, and in that the seats of the central columns of seats present, when they are converted into berth, a length greater than the length of the lateral column seats when they are converted into berth.

24. Set of aircraft seats according to claim 19, characterized in that the seats of one of the central columns are aligned in relation to the seats of the other of the central columns but are staggered in relation to the seats of the corresponding lateral column of seats.

25. Aircraft, characterized in that it includes a set of seats according to one of claims 1 to 24.