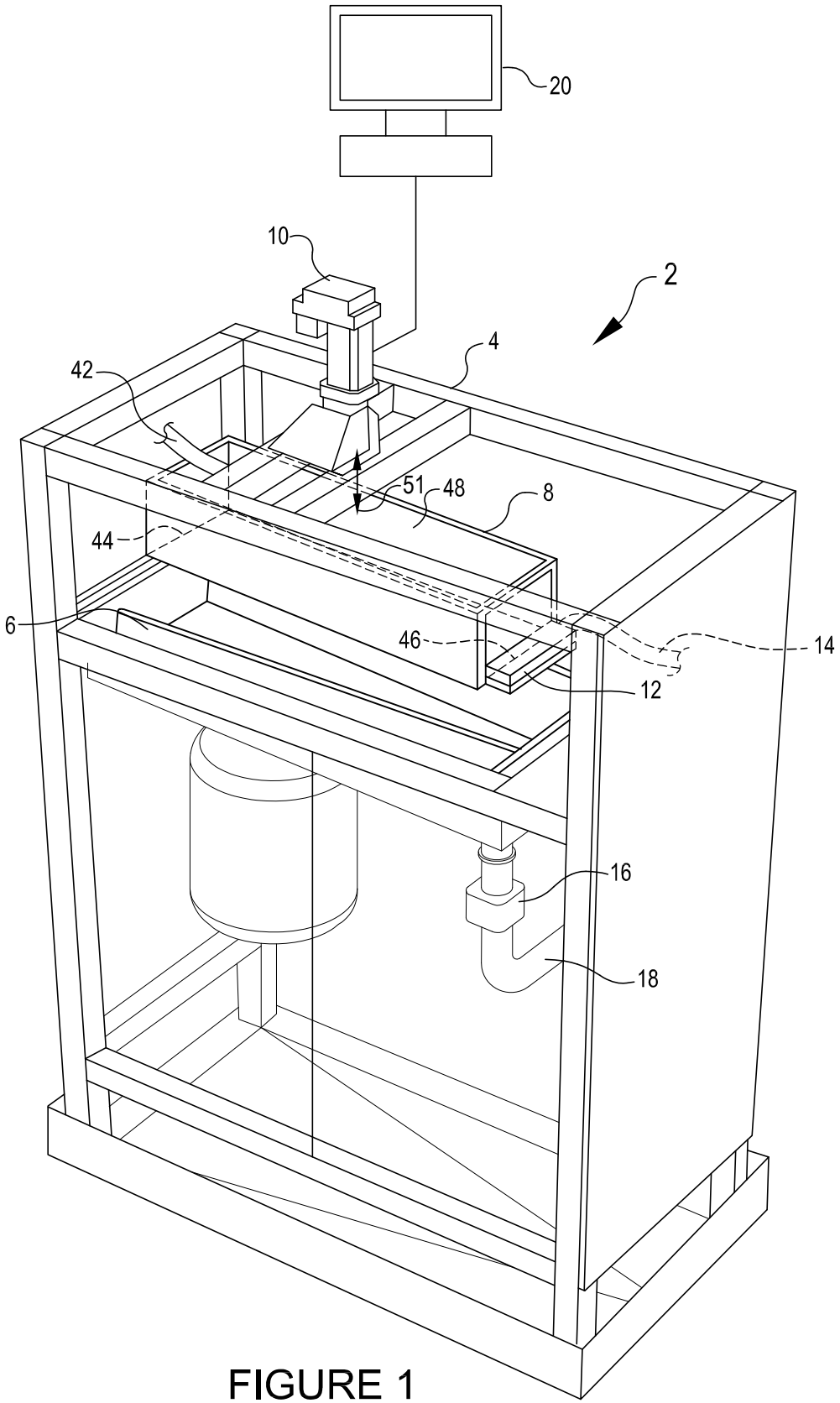

FIGURE 1

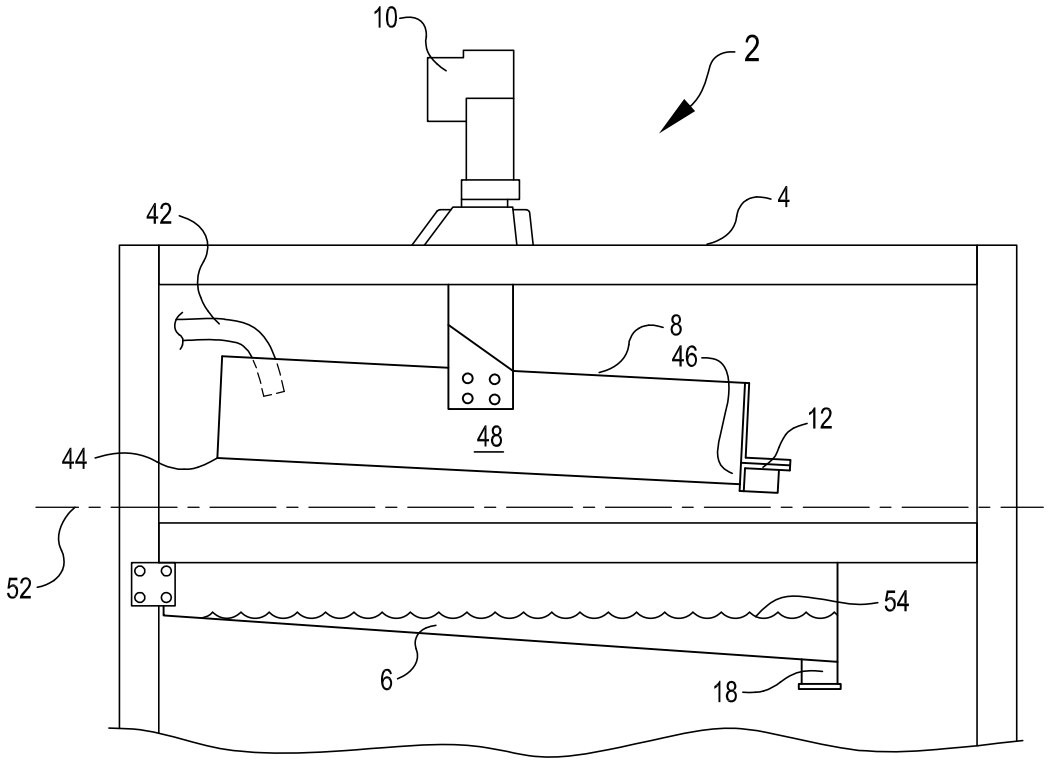

FIGURE 2

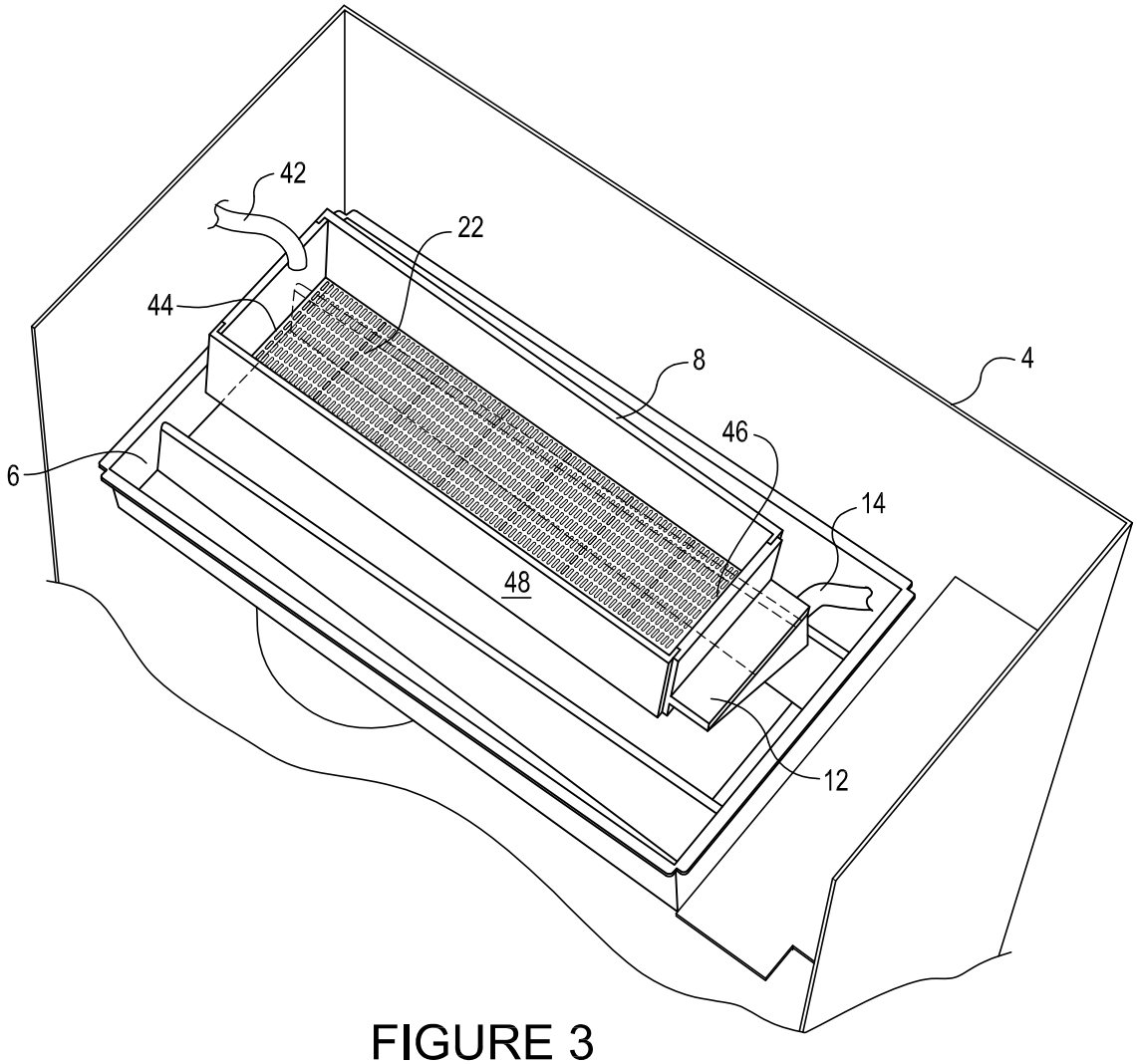

FIGURE 3

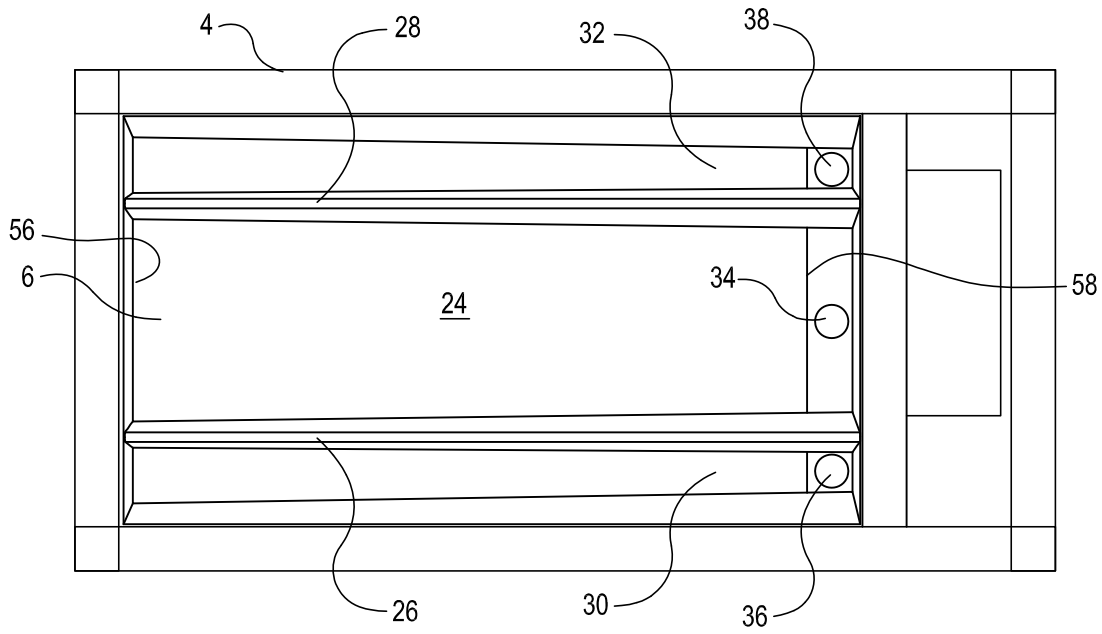

FIGURE 4

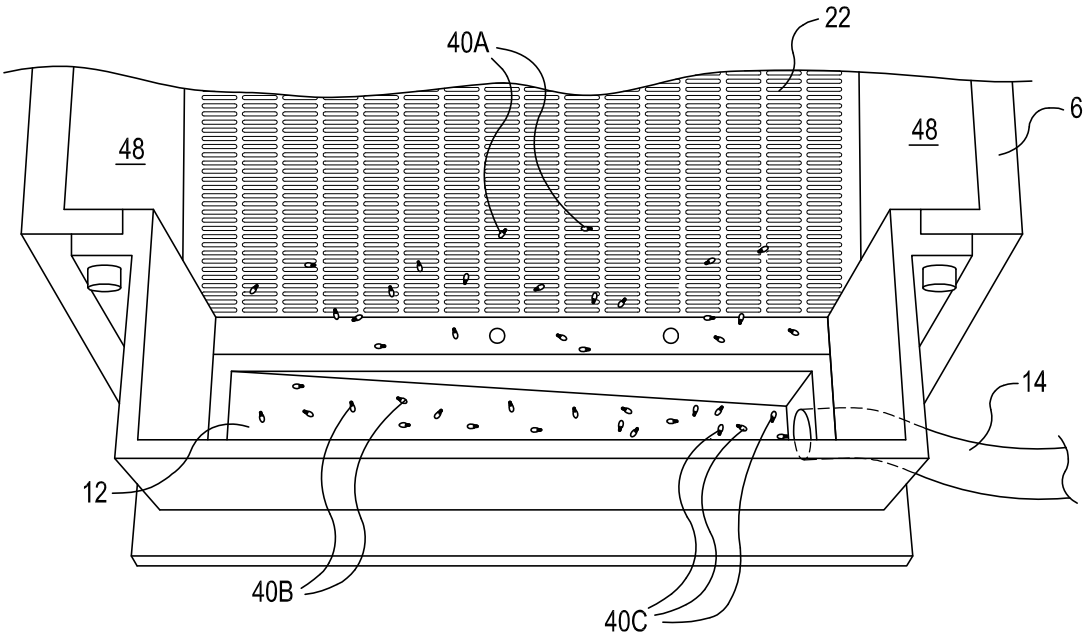

FIGURE 5

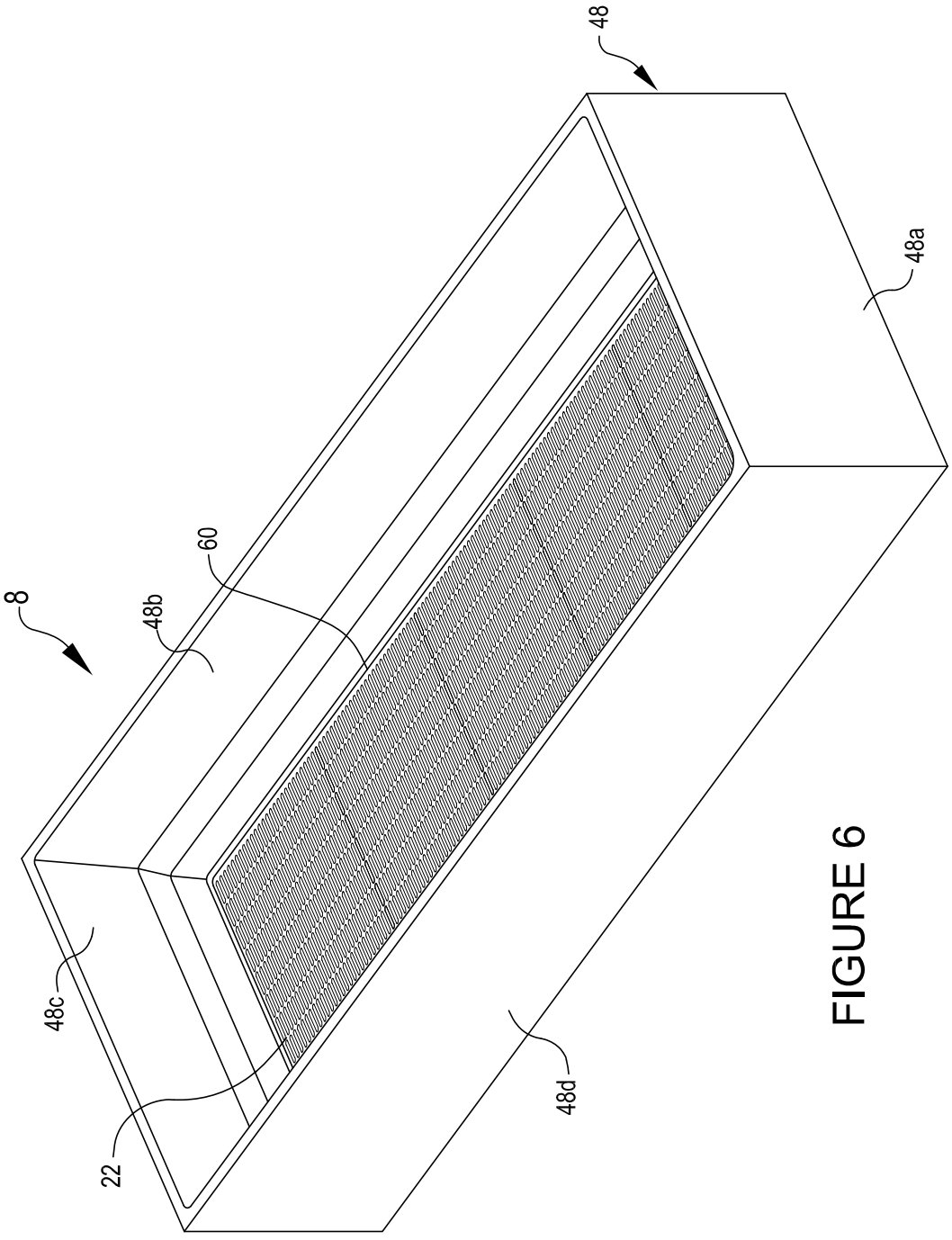

FIGURE 6

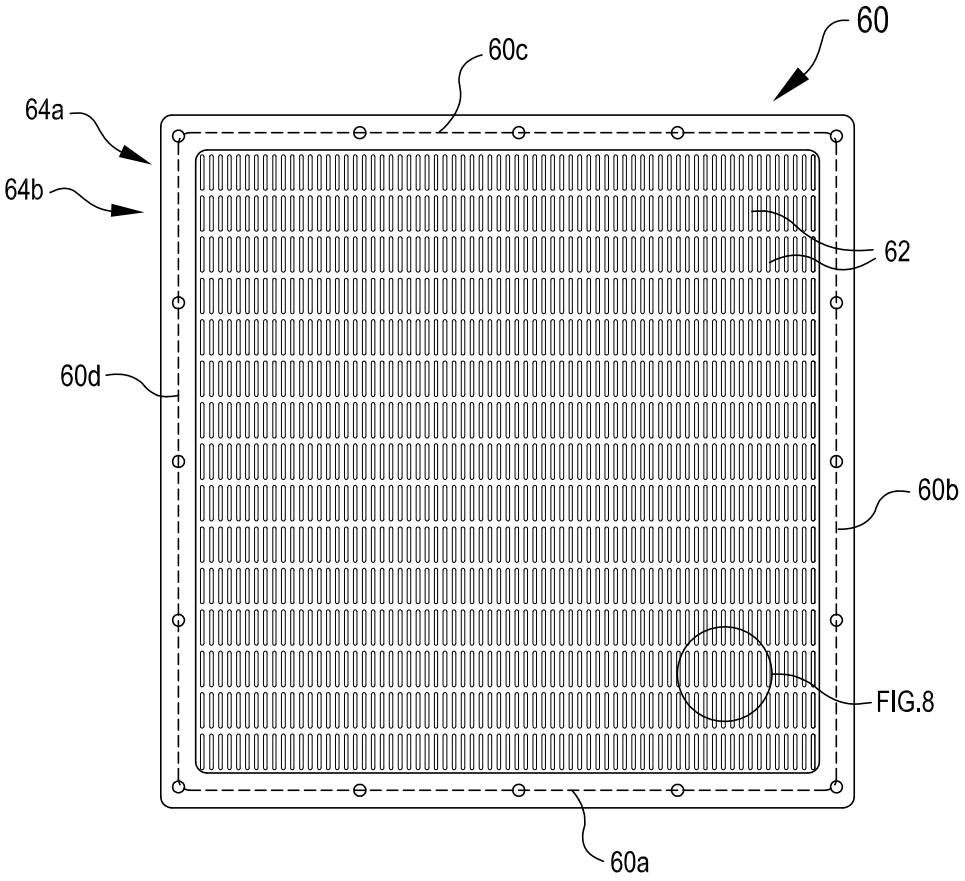

FIGURE 7

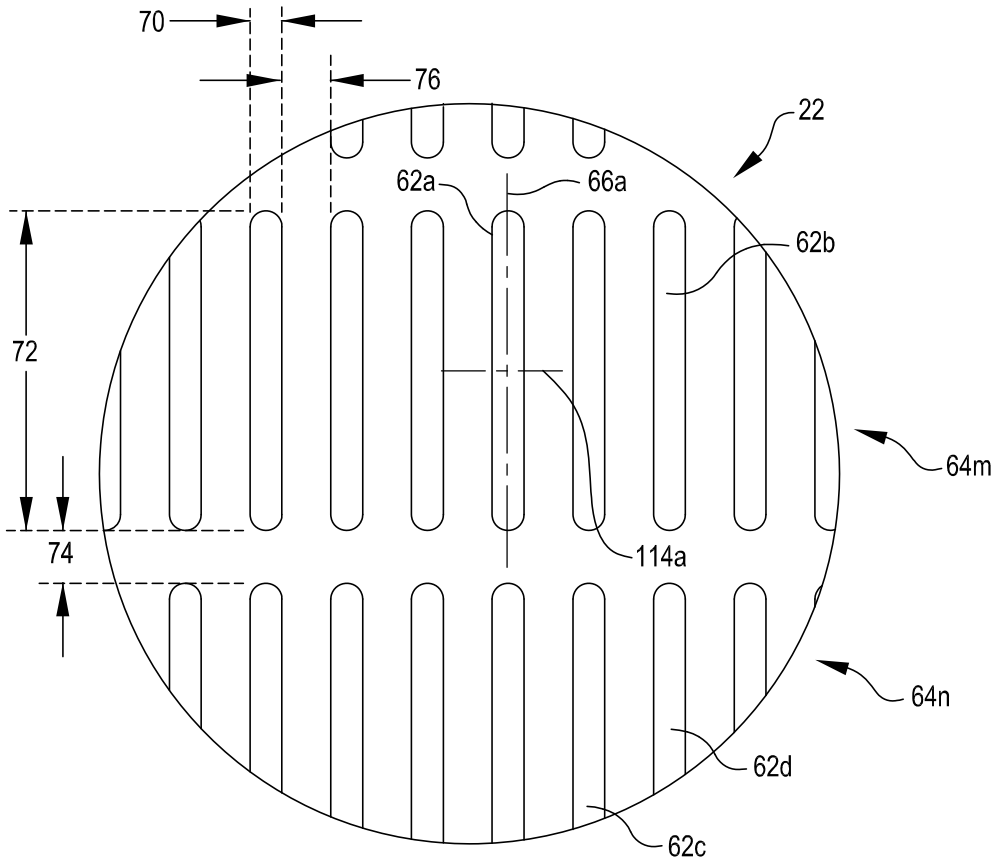

FIGURE 8

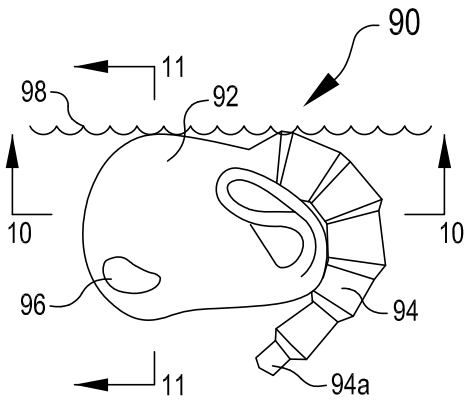

FIGURE 9

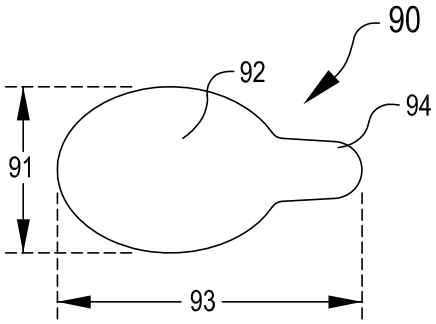

FIGURE 10

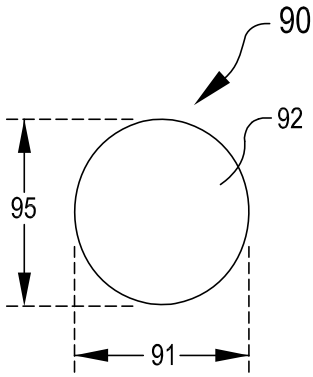

FIGURE 11

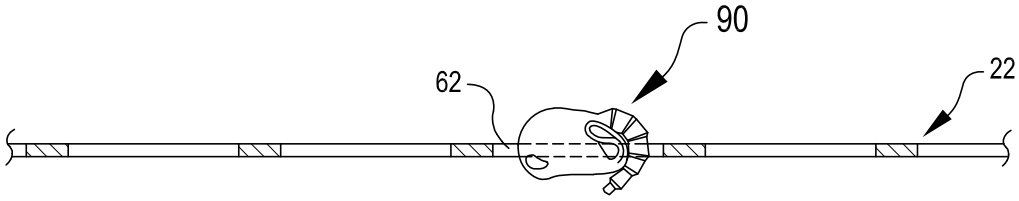

FIGURE 12

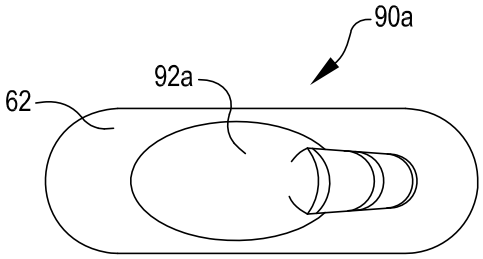

FIGURE 13

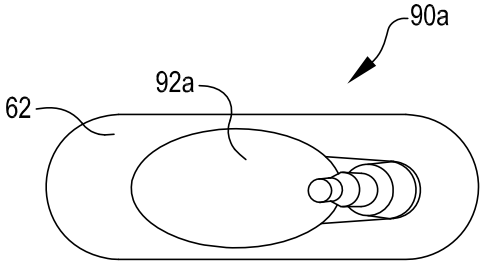

FIGURE 14

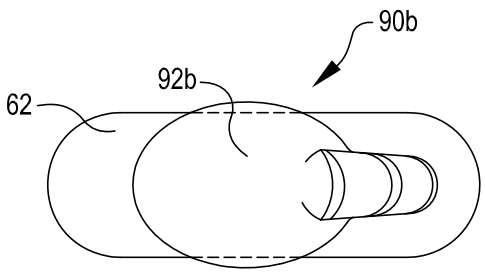

FIGURE 15

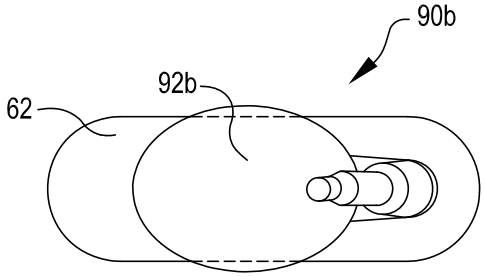

FIGURE 16

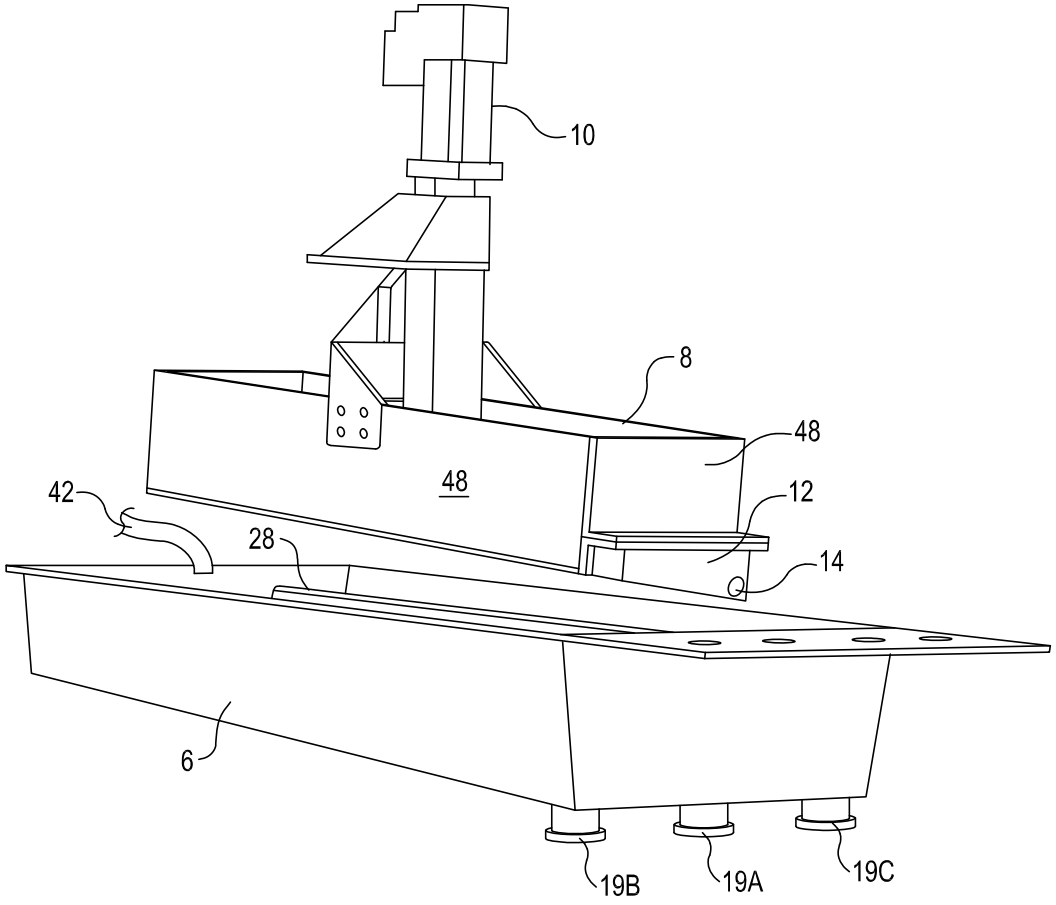

FIGURE 17

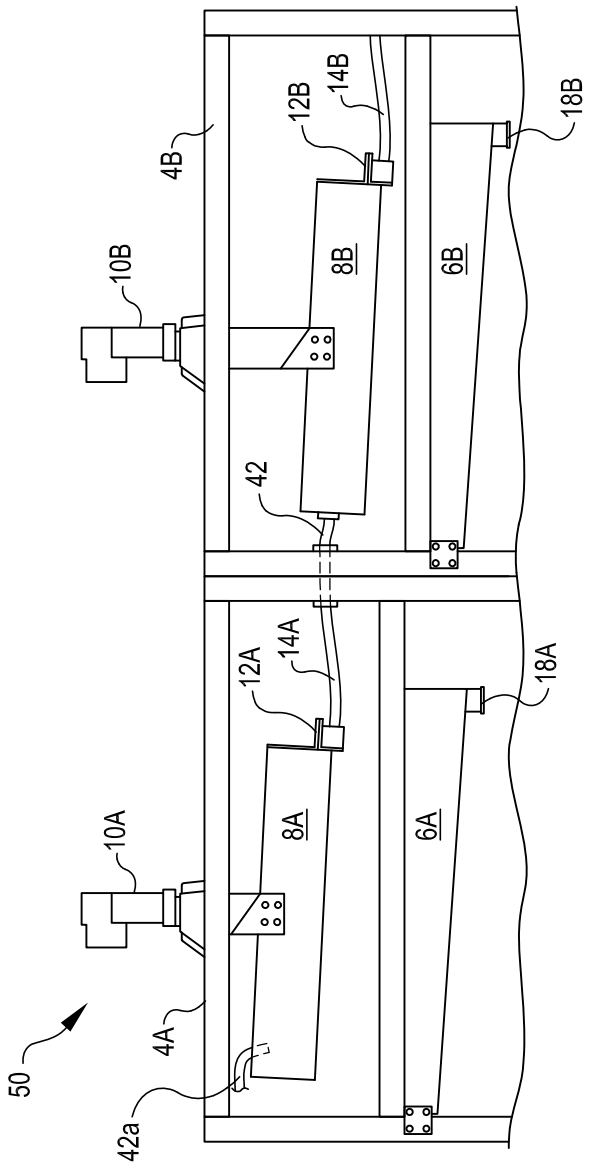

FIGURE 18

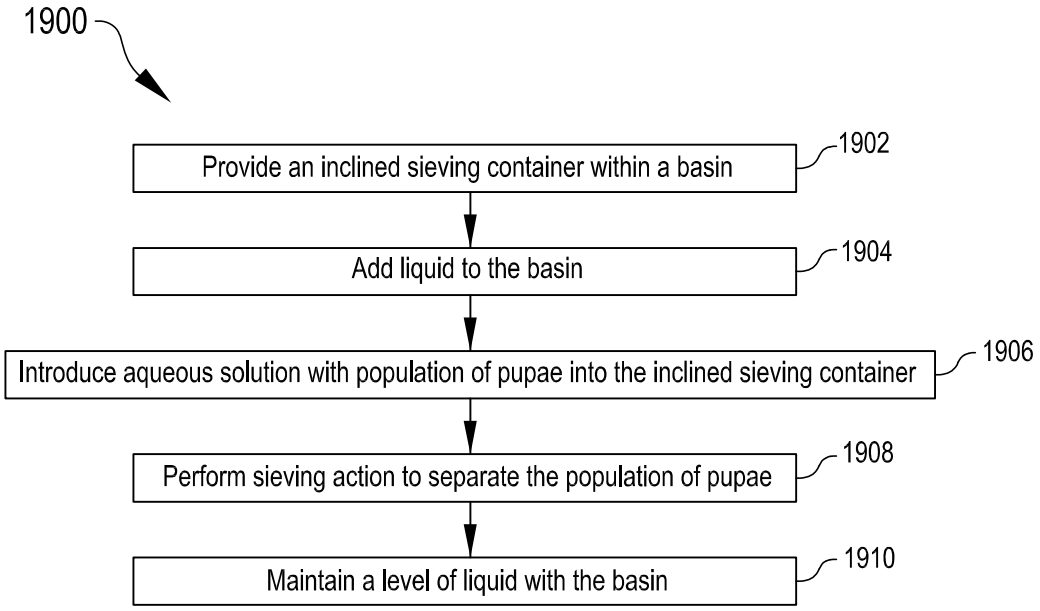
1900
Provide an inclined sieving container within a basin
1902
Add liquid to the basin
1904
Introduce aqueous solution with population of pupae into the inclined sieving container
1906
Perform sieving action to separate the population of pupae
1908
Maintain a level of liquid with the basin
1910

FIGURE 19

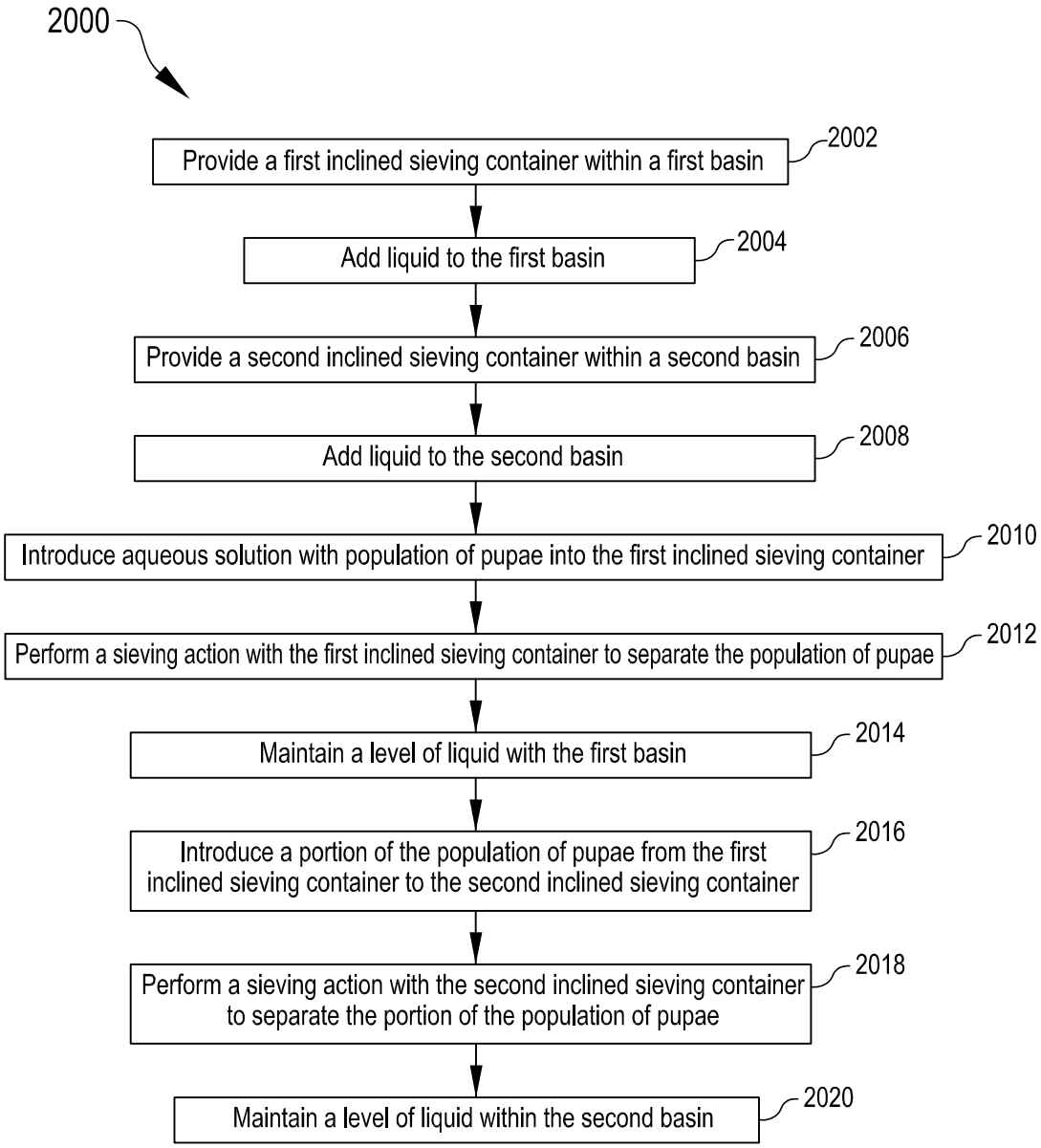
2000
Provide a first inclined sieving container within a first basin
2002
Add liquid to the first basin
2004
Provide a second inclined sieving container within a second basin
2006
Add liquid to the second basin
2008
Introduce aqueous solution with population of pupae into the first inclined sieving container
2010
Perform a sieving action with the first inclined sieving container to separate the population of pupae
2012
Maintain a level of liquid with the first basin
2014
Introduce a portion of the population of pupae from the first inclined sieving container to the second inclined sieving container
2016
Perform a sieving action with the second inclined sieving container to separate the portion of the population of pupae
2018
Maintain a level of liquid within the second basin
2020

FIGURE 20

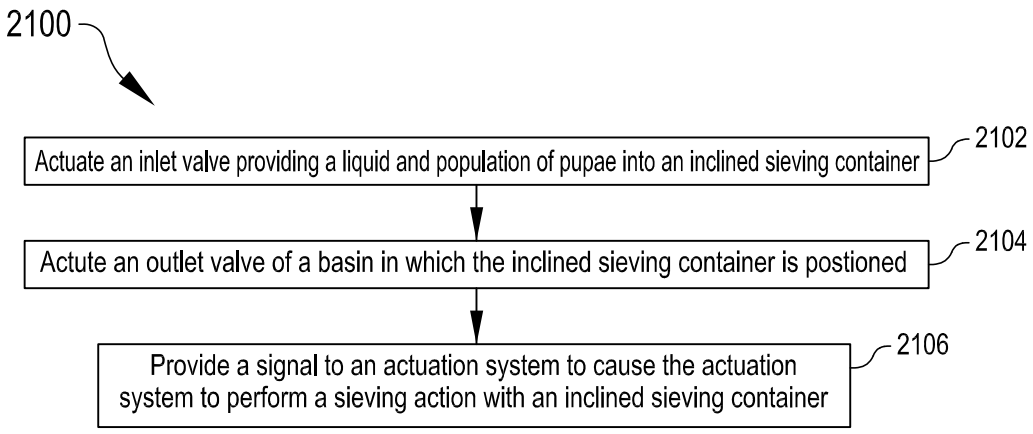

FIGURE 21

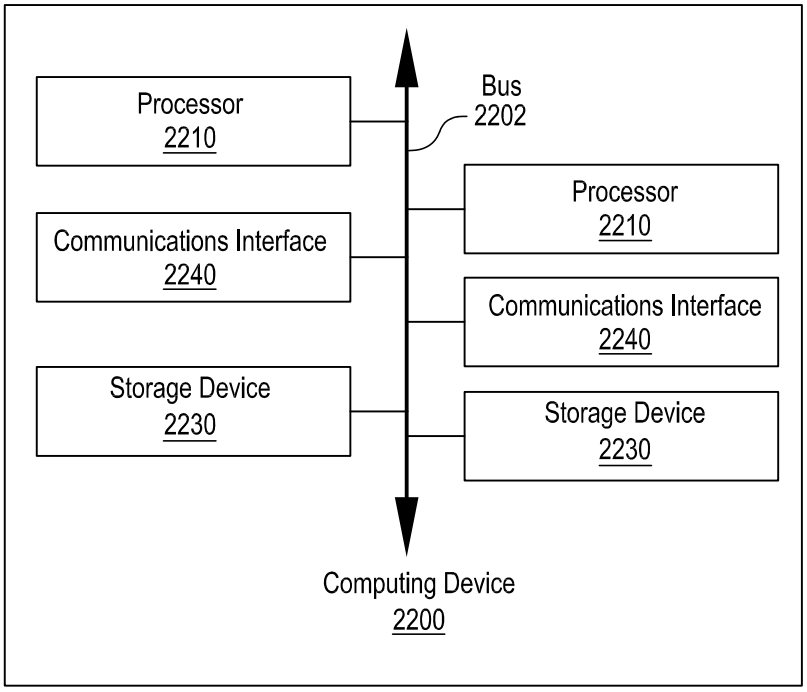

FIGURE 22