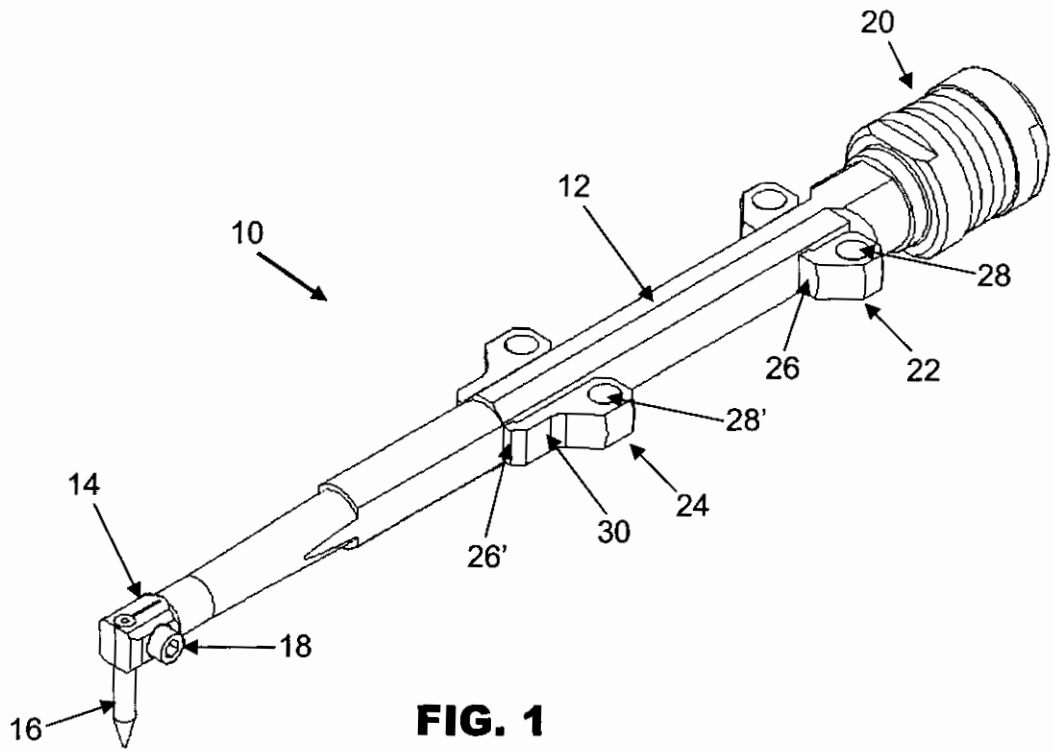
20
12
10
28
26
22
28'
14
24
30
26'
18
16

FIG. 1

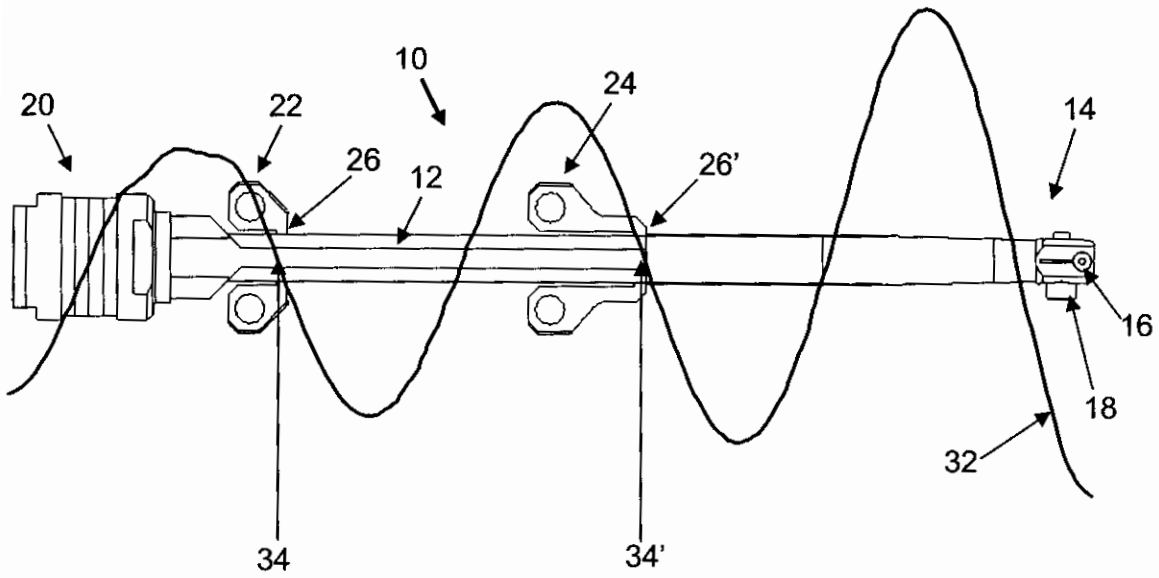
10
20
22
24
14
26
12
26'
16
18
32
34
34'

FIG. 2

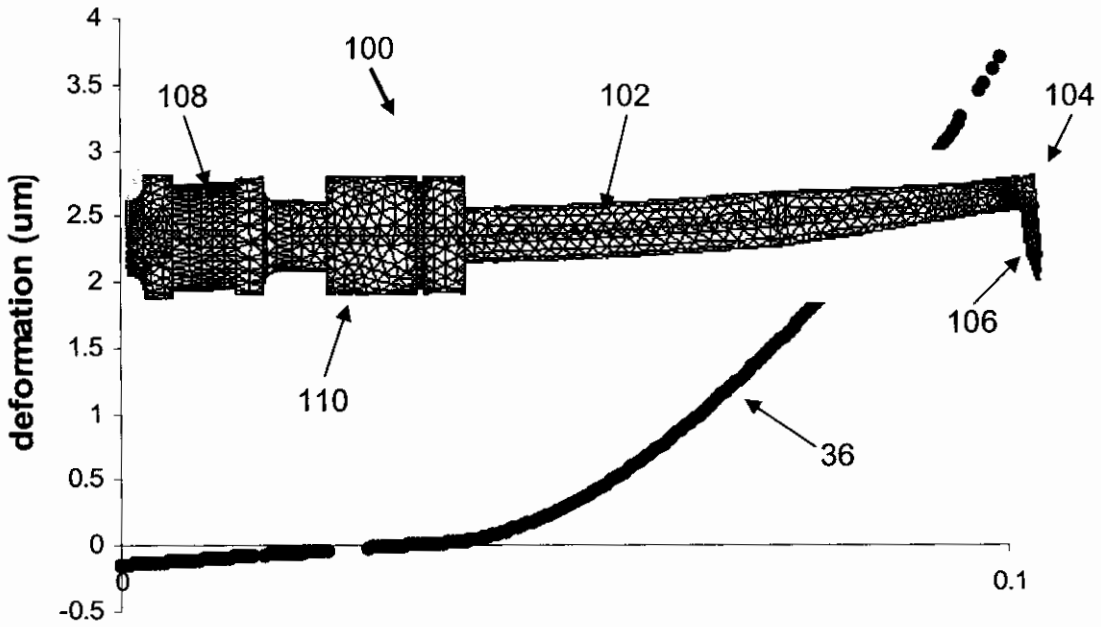
deformation (um)
4
3.5
3
2.5
2
1.5
1
0.5
0
-0.5
0
0.1
100
108
102
104
106
110
36

FIG. 3

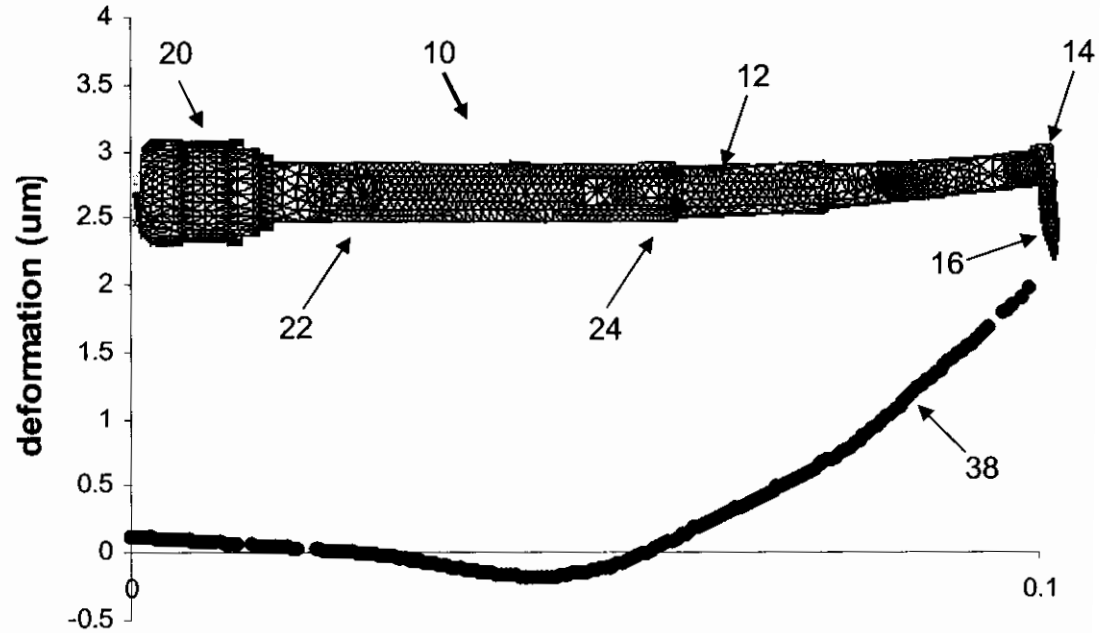
deformation (um)
4
3.5
3
2.5
2
1.5
1
0.5
0
-0.5
0
0.1
20
10
12
14
16
22
24
38

FIG. 4