(12) INTERNATIONAL APPLICATION PUBLISHED UNDER THE PATENT COOPERATION TREATY (PCT)

(19) World Intellectual Property Organization
International Bureau

(43) International Publication Date
29 June 2006 (29.06.2006)

PCT

(10) International Publication Number
WO 2006/068952 A1

(51) International Patent Classification:
B29C 45/16 (2006.01) *F21V 7/22* (2006.01)

(21) International Application Number:
PCT/US2005/045653

(22) International Filing Date:
19 December 2005 (19.12.2005)

(25) Filing Language: English

(26) Publication Language: English

(30) Priority Data:
11/018,638 21 December 2004 (21.12.2004) US

(71) Applicant *(for all designated States except US)*: **GENERAL ELECTRIC COMPANY** [US/US]; 1 River Road, Schenectady, New York 12345 (US).

(72) Inventors; and

(75) Inventors/Applicants *(for US only)*: **ZUBER, Peter** [US/US]; 36 Mountainview Drive, Pittsfield, Massachusetts 01201 (US). **WILSON, James, R.** [US/US]; 4610 Butler Drive, Troy, Michigan 48085 (US).

(74) Agents: **GNIBUS, Michael** et al.; General Electric Company, 3135 Easton Turnpike (W3C), Fairfield, Connecticut 06828 (US).

(81) Designated States *(unless otherwise indicated, for every kind of national protection available)*: AE, AG, AL, AM, AT, AU, AZ, BA, BB, BG, BR, BW, BY, BZ, CA, CH, CN, CO, CR, CU, CZ, DE, DK, DM, DZ, EC, EE, EG, ES, FI, GB, GD, GE, GH, GM, HR, HU, ID, IL, IN, IS, JP, KE, KG, KM, KN, KP, KR, KZ, LC, LK, LR, LS, LT, LU, LV, LY, MA, MD, MG, MK, MN, MW, MX, MZ, NA, NG, NI, NO, NZ, OM, PG, PH, PL, PT, RO, RU, SC, SD, SE, SG, SK, SL, SM, SY, TJ, TM, TN, TR, TT, TZ, UA, UG, US, UZ, VC, VN, YU, ZA, ZM, ZW.

(84) Designated States *(unless otherwise indicated, for every kind of regional protection available)*: ARIPO (BW, GH, GM, KE, LS, MW, MZ, NA, SD, SL, SZ, TZ, UG, ZM, ZW), Eurasian (AM, AZ, BY, KG, KZ, MD, RU, TJ, TM), European (AT, BE, BG, CH, CY, CZ, DE, DK, EE, ES, FI, FR, GB, GR, HU, IE, IS, IT, LT, LU, LV, MC, NL, PL, PT, RO, SE, SI, SK, TR), OAPI (BF, BJ, CF, CG, CI, CM, GA, GN, GQ, GW, ML, MR, NE, SN, TD, TG).

Declarations under Rule 4.17:

— *as to applicant's entitlement to apply for and be granted a patent (Rule 4.17(ii))*

— *as to the applicant's entitlement to claim the priority of the earlier application (Rule 4.17(iii))*

[Continued on next page]

(54) Title: HEAT RESISTANT PLASTIC LAMP COMPONENTS AND METHODS OF FORMING

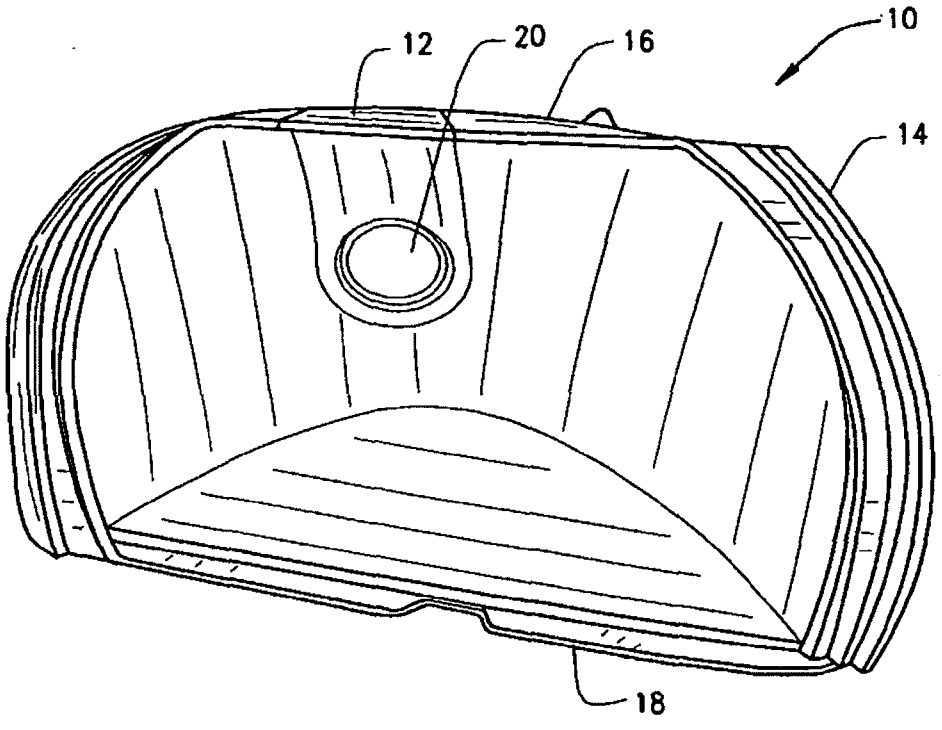

(57) Abstract: A molded plastic lamp component includes, in an exemplary embodiment, a first portion formed from a first material having a first heat distortion temperature, and a second portion formed from a second material having a second heat distortion temperature. The first heat distortion temperature is higher than the second heat distortion temperature.

WO 2006/068952 A1

Published:
— *with international search report*

For two-letter codes and other abbreviations, refer to the "Guidance Notes on Codes and Abbreviations" appearing at the beginning of each regular issue of the PCT Gazette.