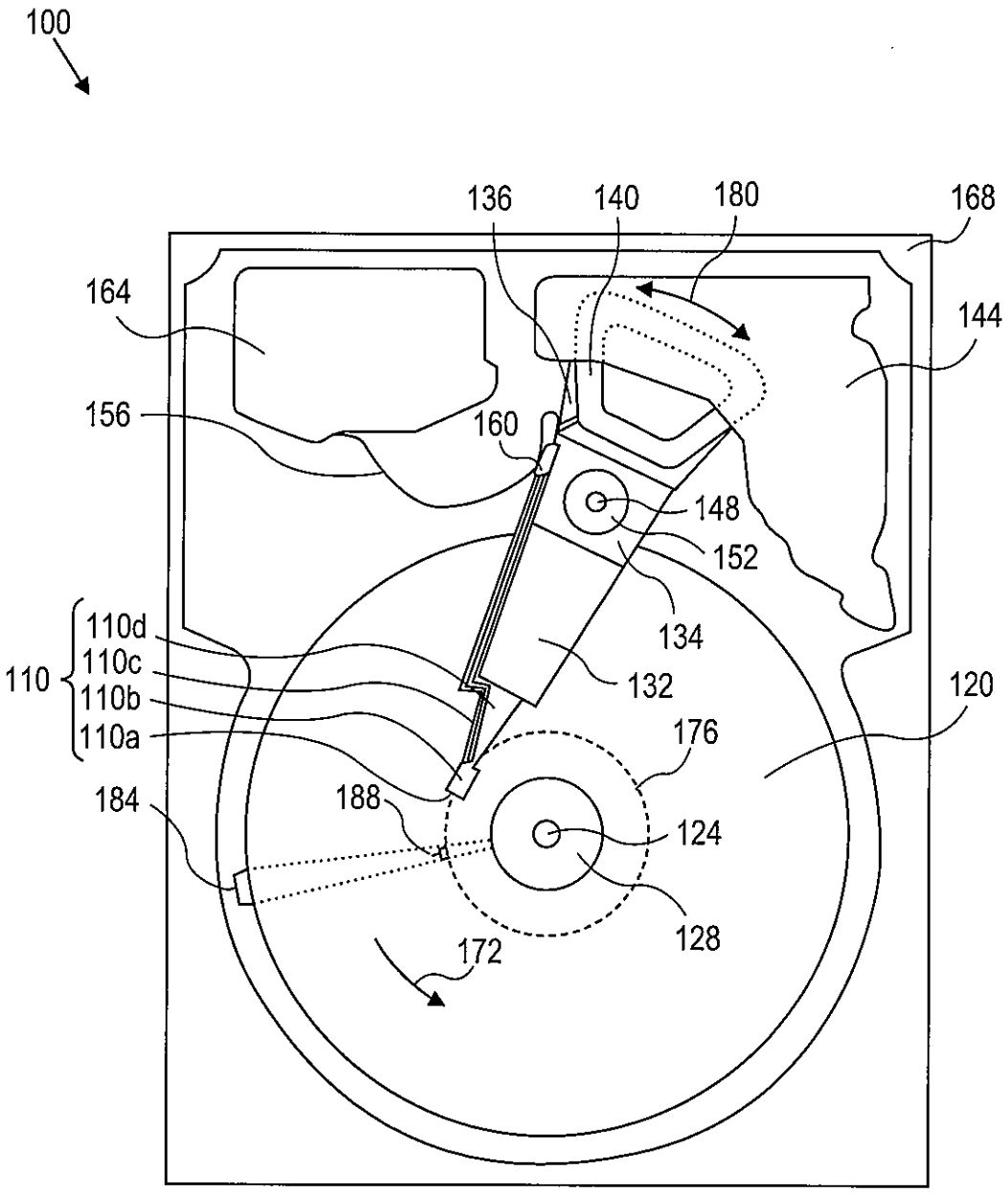
100
136
140
180
168
164
144
156
160
148
152
134
110
110d
110c
110b
110a
132
120
176
184
188
124
128
172

FIG. 1

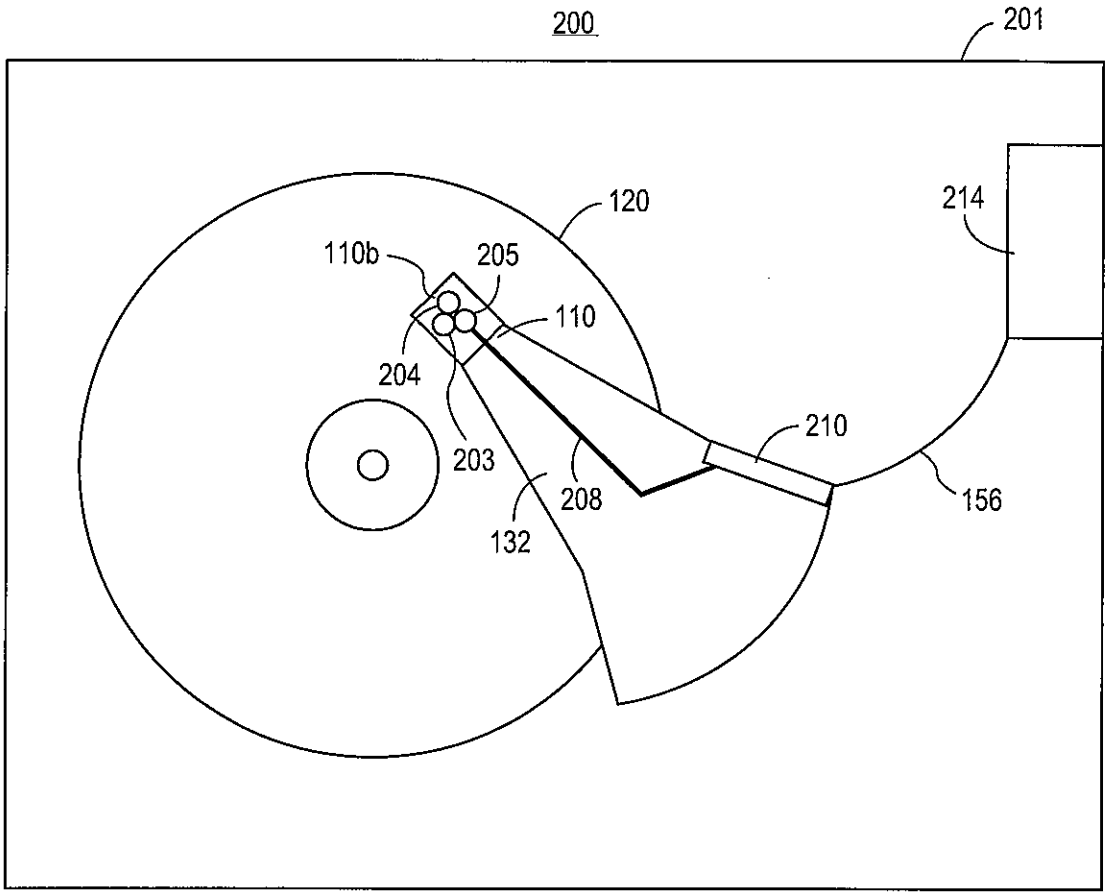

FIG. 2

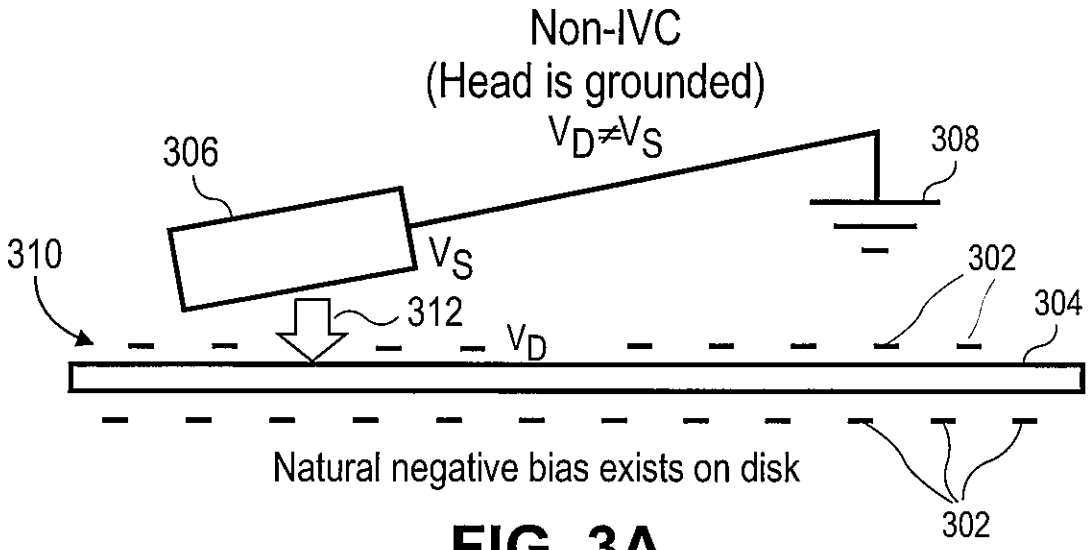
Non-IVC
(Head is grounded)
$V_D \neq V_S$
306
308
310
V_S
302
312
304
V_D
Natural negative bias exists on disk
302

FIG. 3A

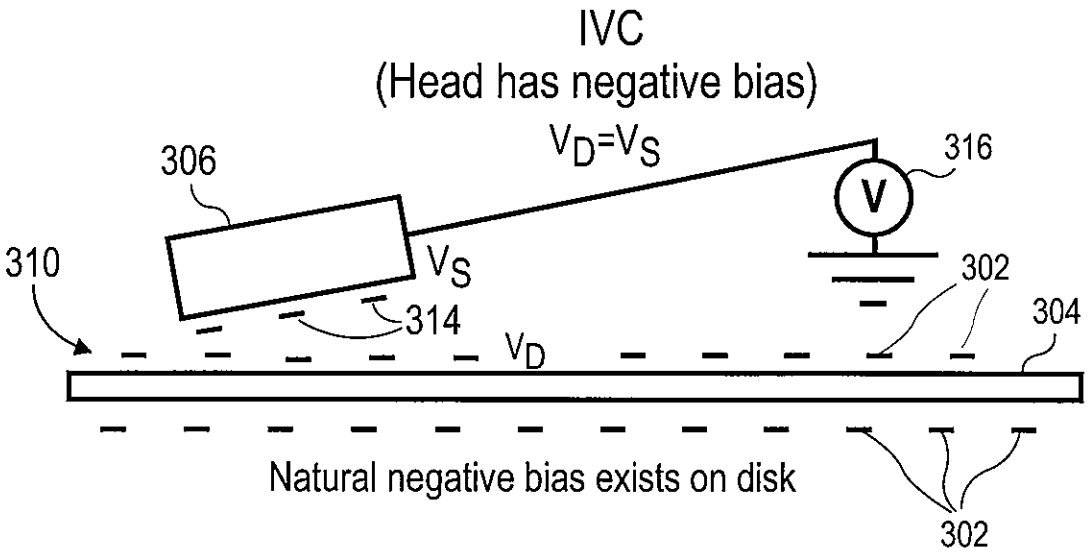
IVC
(Head has negative bias)
$V_D = V_S$
306
316
V
310
V_S
302
314
304
V_D
Natural negative bias exists on disk
302

FIG. 3B

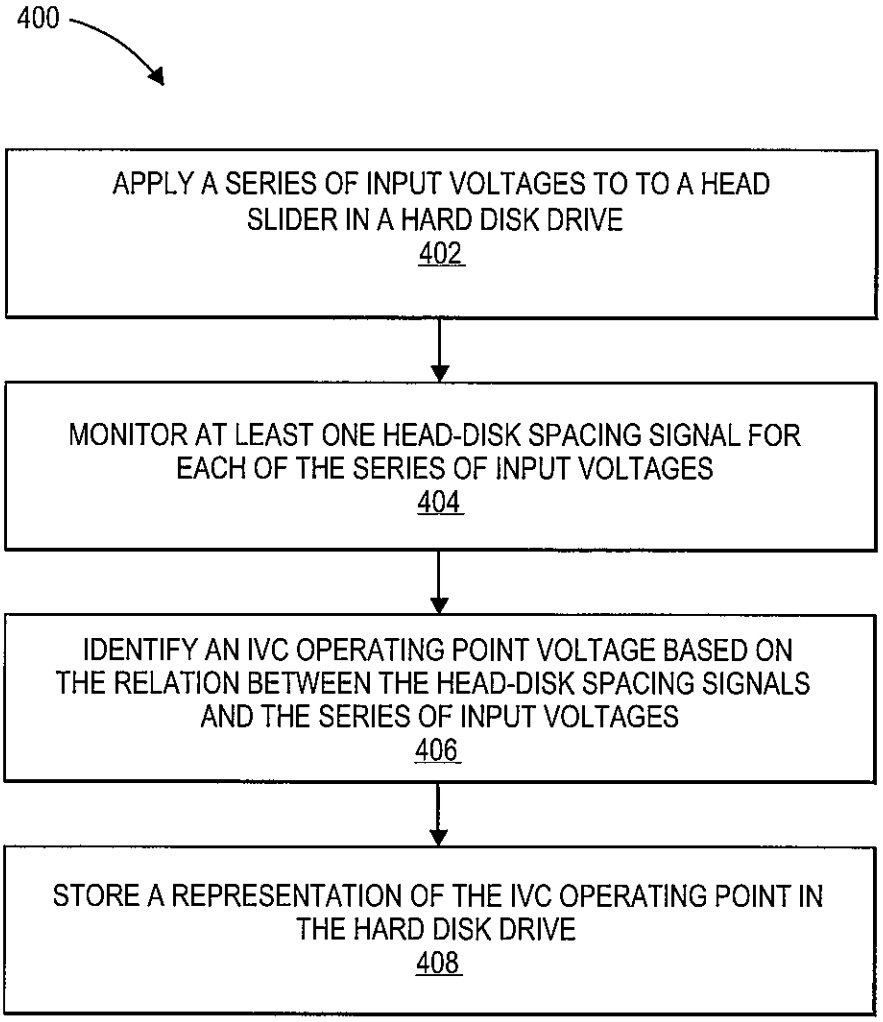
400
APPLY A SERIES OF INPUT VOLTAGES TO TO A HEAD SLIDER IN A HARD DISK DRIVE
402
MONITOR AT LEAST ONE HEAD-DISK SPACING SIGNAL FOR EACH OF THE SERIES OF INPUT VOLTAGES
404
IDENTIFY AN IVC OPERATING POINT VOLTAGE BASED ON THE RELATION BETWEEN THE HEAD-DISK SPACING SIGNALS AND THE SERIES OF INPUT VOLTAGES
406
STORE A REPRESENTATION OF THE IVC OPERATING POINT IN THE HARD DISK DRIVE
408

FIG. 4

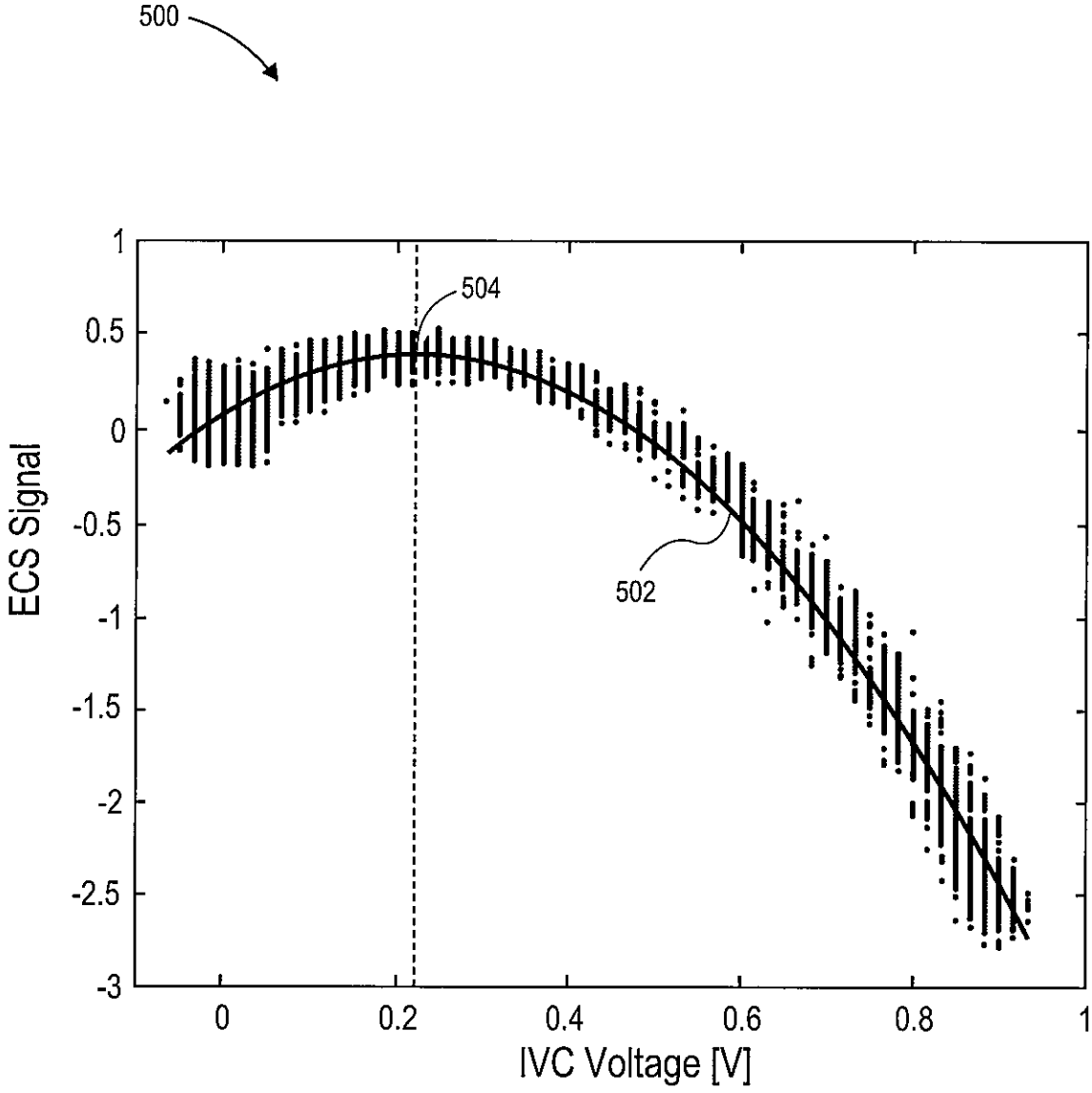
500
504
502
ECS Signal
IVC Voltage [V]
1
0.5
0
-0.5
-1
-1.5
-2
-2.5
-3
0
0.2
0.4
0.6
0.8
1

FIG. 5