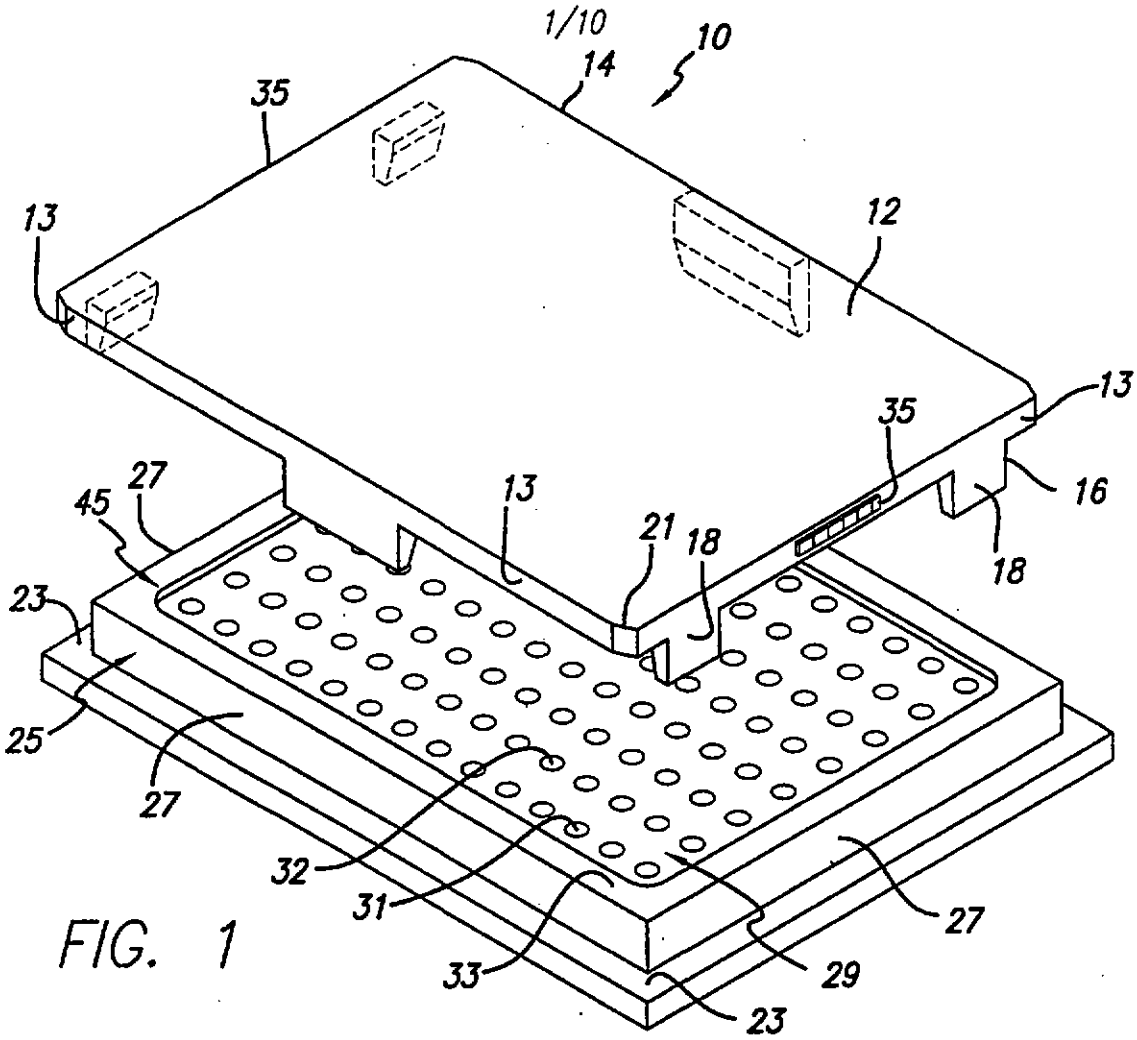
1/10
10
14
35
13
12
13
35
16
18
27
45
13
21
18
23
25
27
32
31
33
29
27
23

FIG. 1

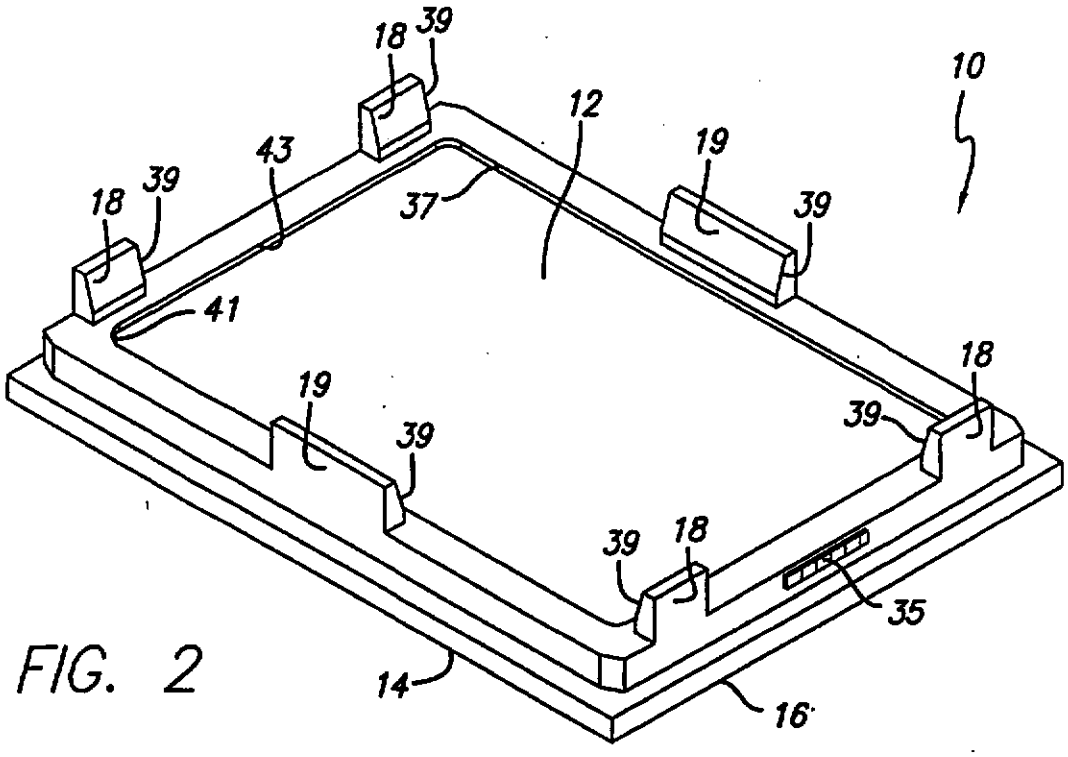
18
39
10
12
43
19
18
39
37
39
41
18
19
39
39
18
39
35
14
16

FIG. 2

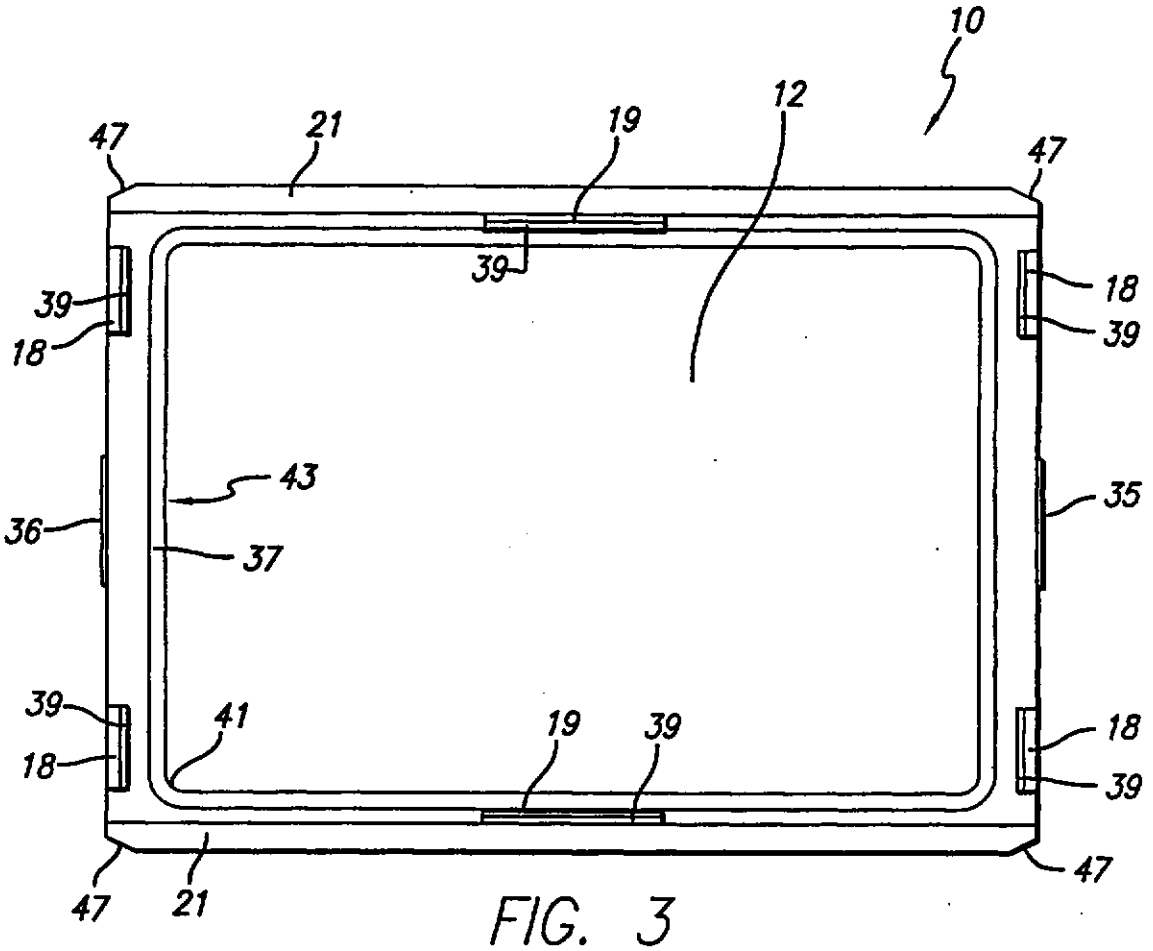
10
12
47
21
19
47
39
39
18
18
39
43
35
36
37
39
41
19
39
18
18
39
47
21
47

FIG. 3

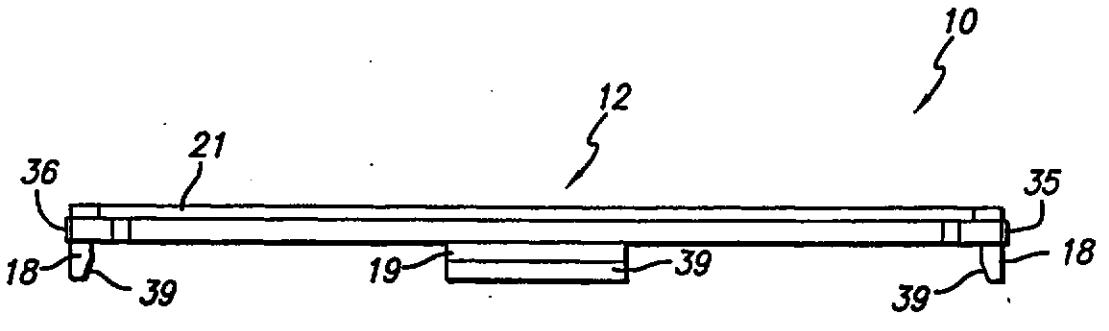
10
12
21
36
35
18
39
19
39
18
39

FIG. 4

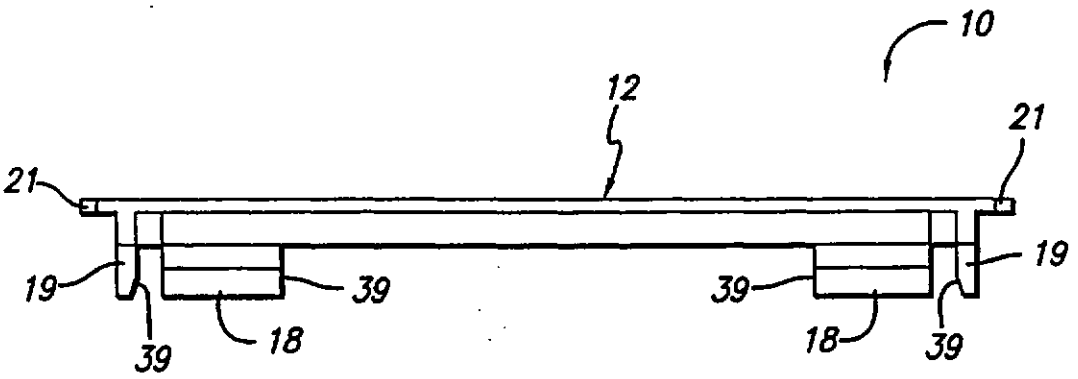

FIG. 5

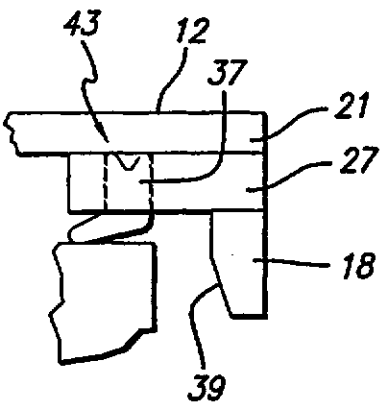

FIG. 6

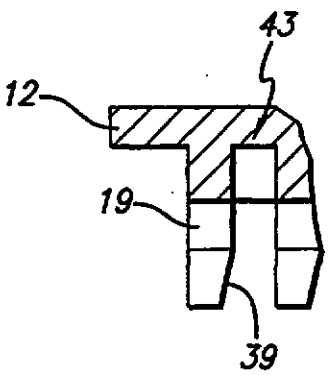

FIG. 7

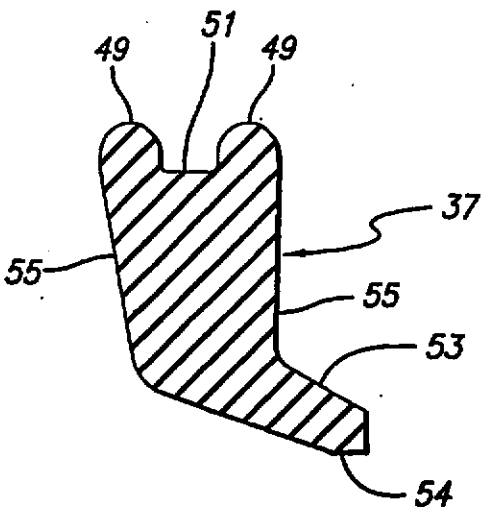

FIG. 8

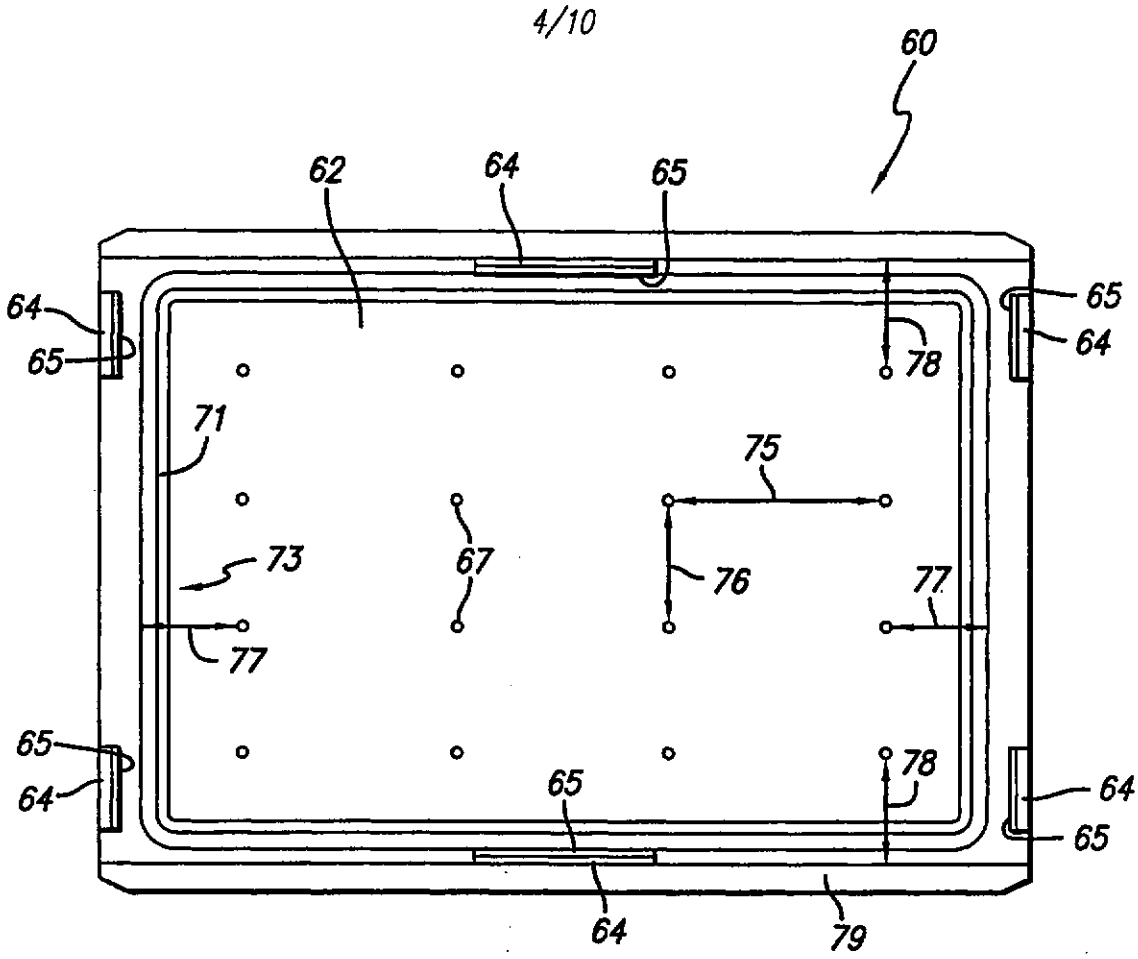
60
62
64
65
64
65
78
65
64
71
75
73
67
76
77
77
65
64
78
64
65
65
64
79

FIG. 9

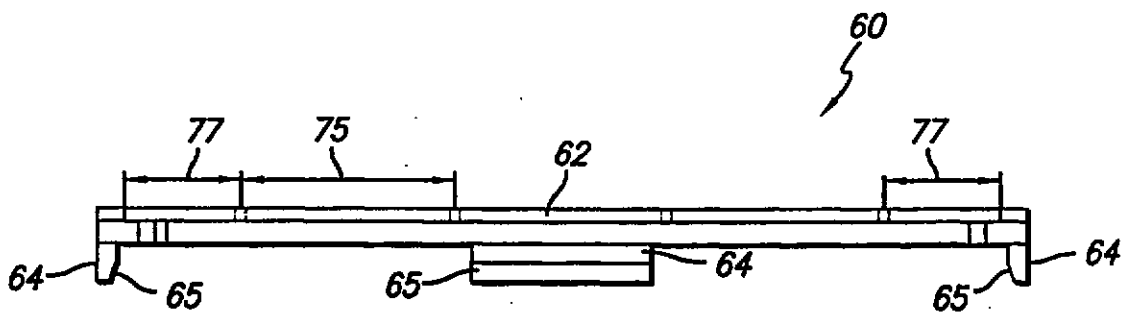
60
77
75
62
77
64
65
65
64
64
65

FIG. 10

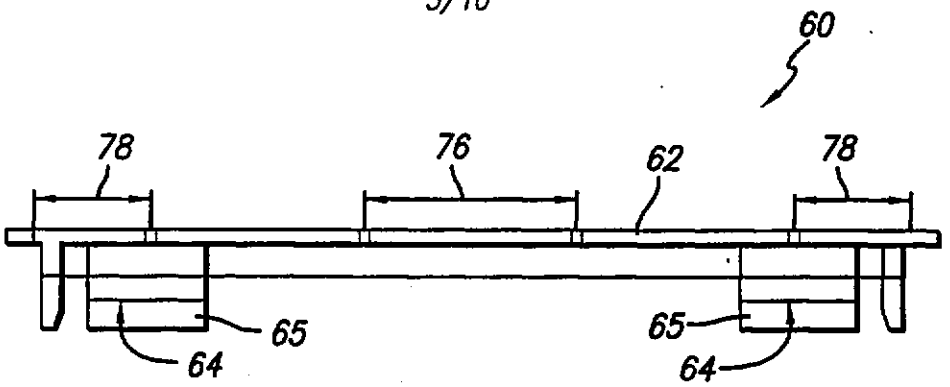

FIG. 11

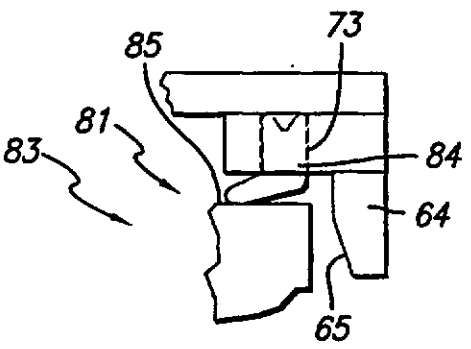

FIG. 12

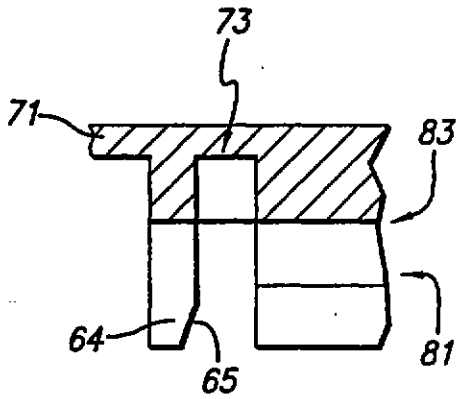

FIG. 13

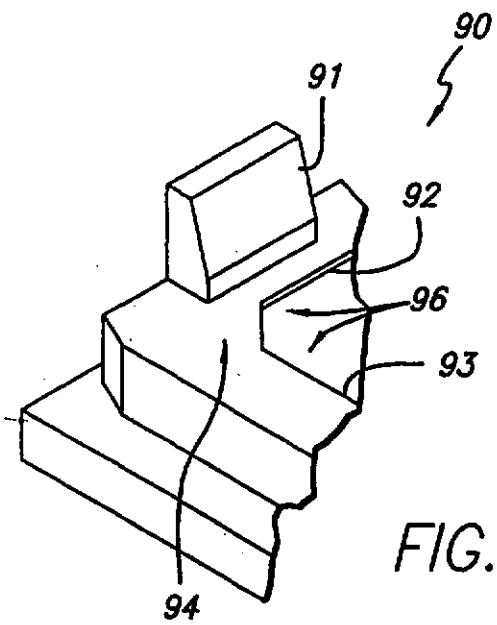

FIG. 14

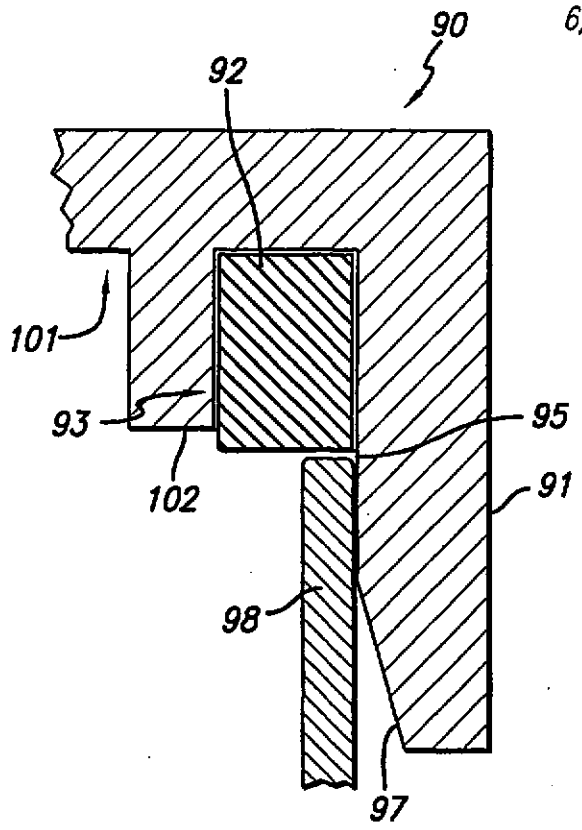

FIG. 15

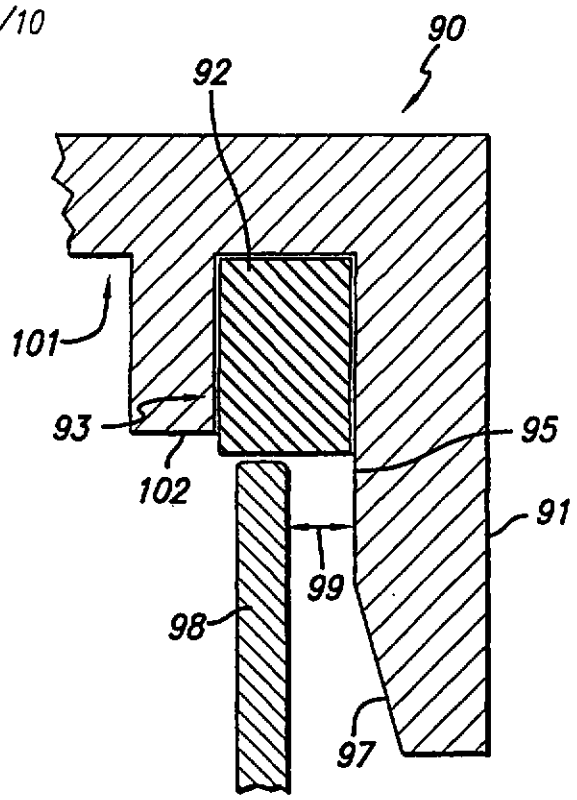

FIG. 16

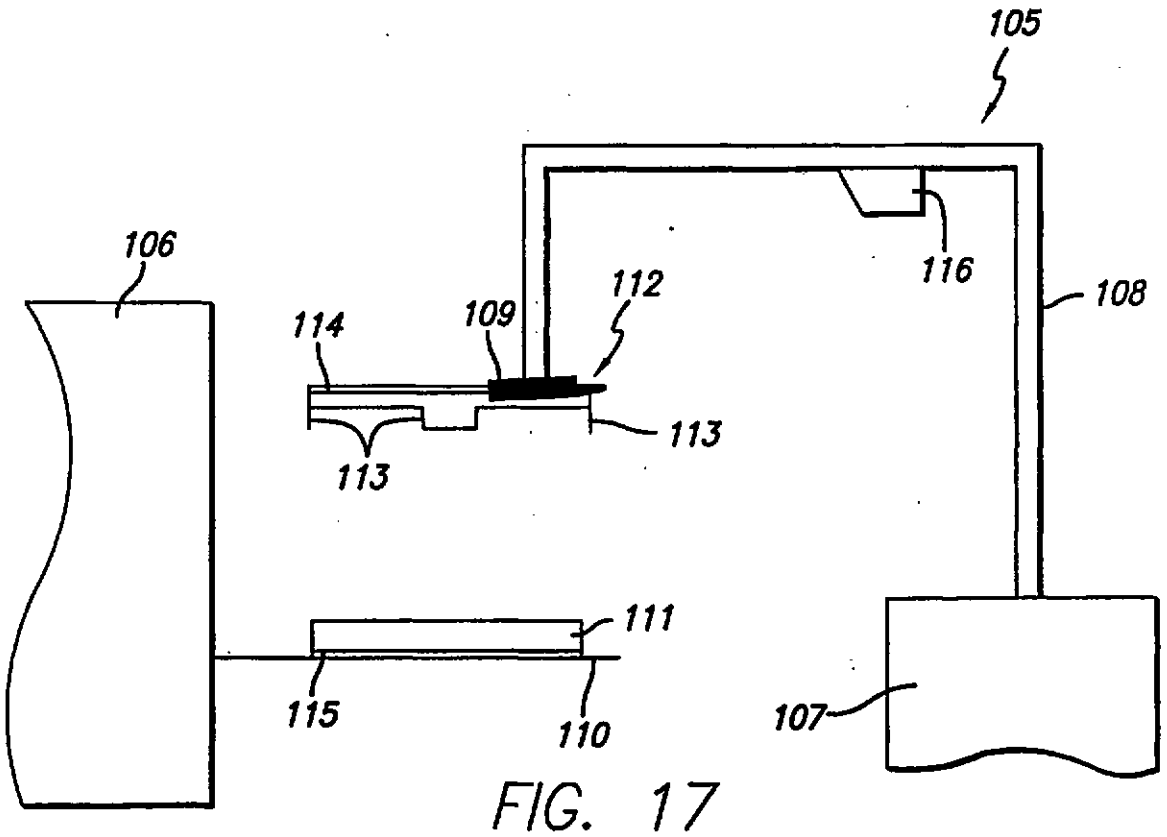

FIG. 17

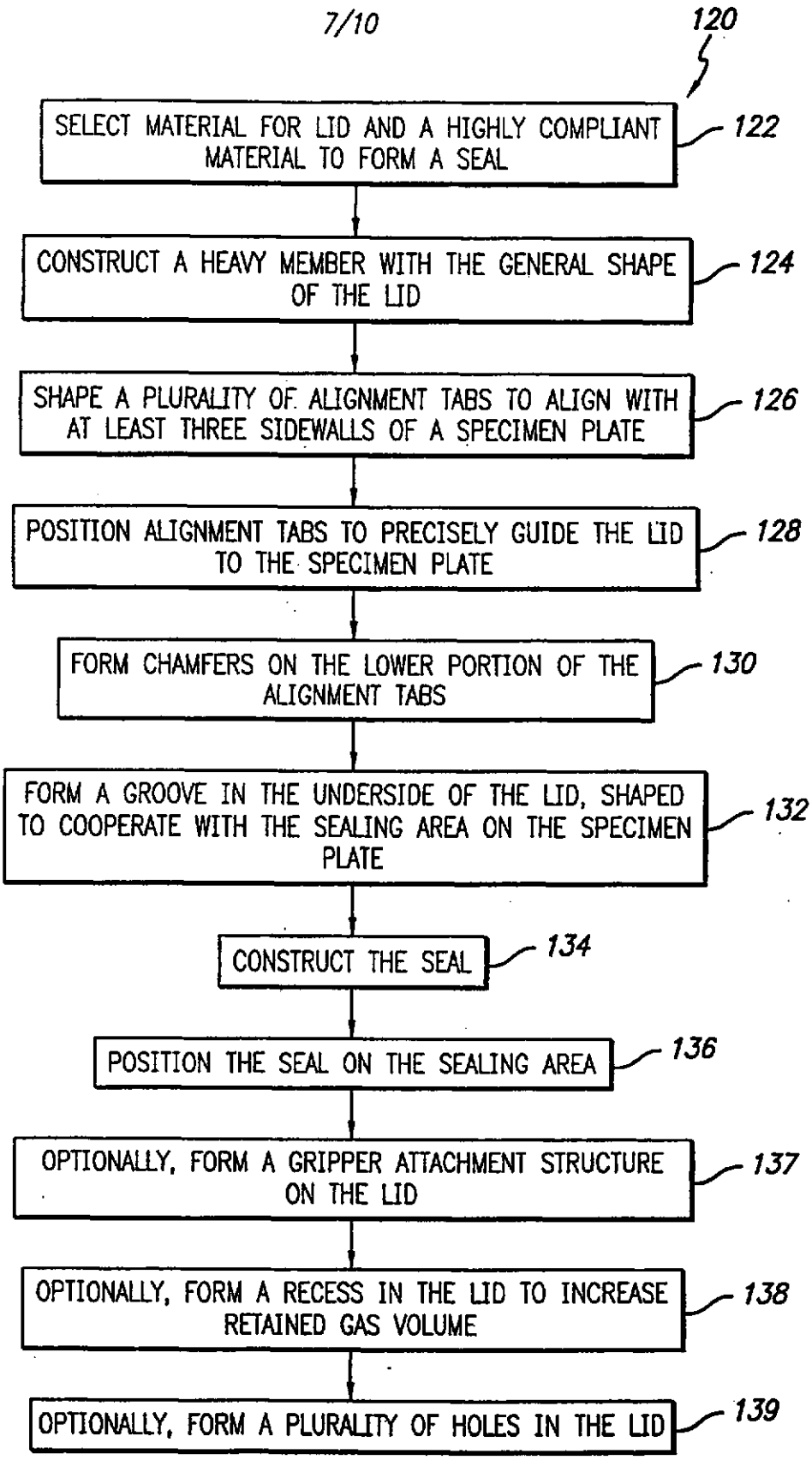
120
SELECT MATERIAL FOR LID AND A HIGHLY COMPLIANT MATERIAL TO FORM A SEAL
122
CONSTRUCT A HEAVY MEMBER WITH THE GENERAL SHAPE OF THE LID
124
SHAPE A PLURALITY OF ALIGNMENT TABS TO ALIGN WITH AT LEAST THREE SIDEWALLS OF A SPECIMEN PLATE
126
POSITION ALIGNMENT TABS TO PRECISELY GUIDE THE LID TO THE SPECIMEN PLATE
128
FORM CHAMFERS ON THE LOWER PORTION OF THE ALIGNMENT TABS
130
FORM A GROOVE IN THE UNDERSIDE OF THE LID, SHAPED TO COOPERATE WITH THE SEALING AREA ON THE SPECIMEN PLATE
132
CONSTRUCT THE SEAL
134
POSITION THE SEAL ON THE SEALING AREA
136
OPTIONALLY, FORM A GRIPPER ATTACHMENT STRUCTURE ON THE LID
137
OPTIONALLY, FORM A RECESS IN THE LID TO INCREASE RETAINED GAS VOLUME
138
OPTIONALLY, FORM A PLURALITY OF HOLES IN THE LID
139

FIG. 18

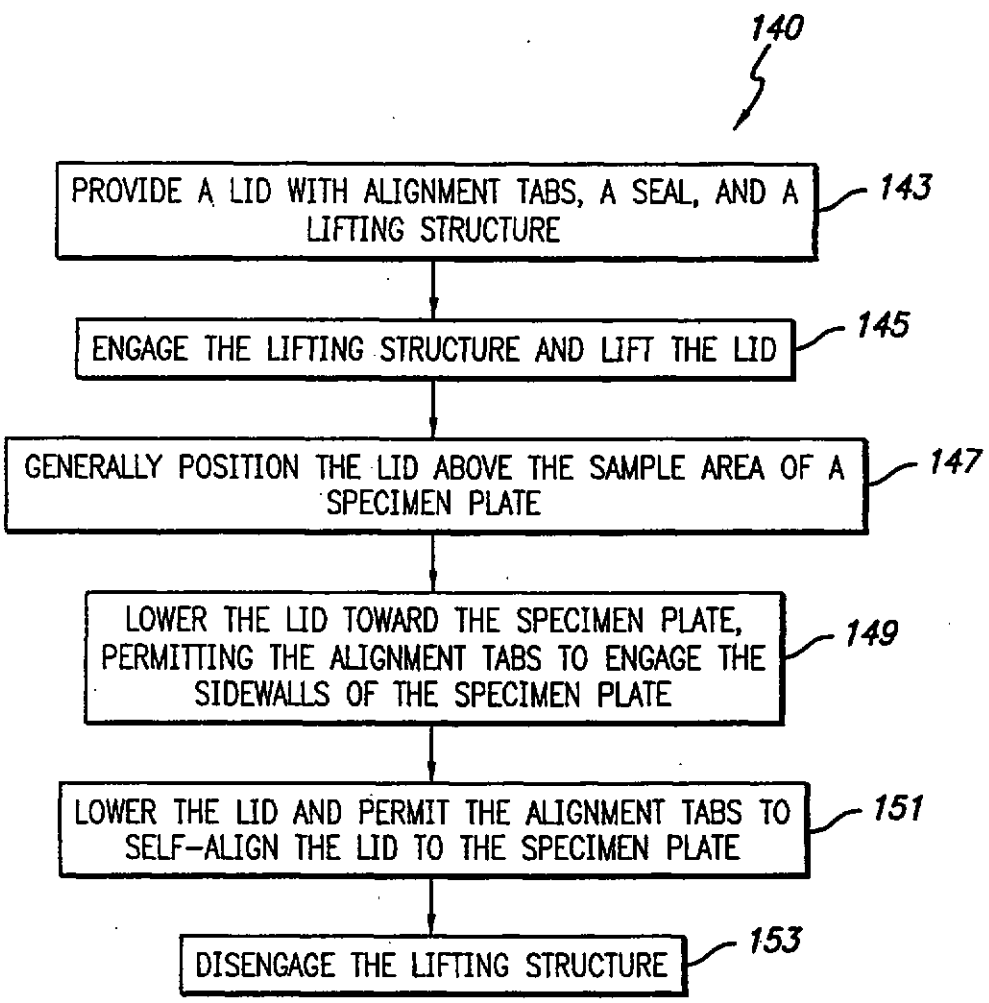
140
PROVIDE A LID WITH ALIGNMENT TABS, A SEAL, AND A LIFTING STRUCTURE
143
ENGAGE THE LIFTING STRUCTURE AND LIFT THE LID
145
GENERALLY POSITION THE LID ABOVE THE SAMPLE AREA OF A SPECIMEN PLATE
147
LOWER THE LID TOWARD THE SPECIMEN PLATE, PERMITTING THE ALIGNMENT TABS TO ENGAGE THE SIDEWALLS OF THE SPECIMEN PLATE
149
LOWER THE LID AND PERMIT THE ALIGNMENT TABS TO SELF-ALIGN THE LID TO THE SPECIMEN PLATE
151
DISENGAGE THE LIFTING STRUCTURE
153

FIG. 19

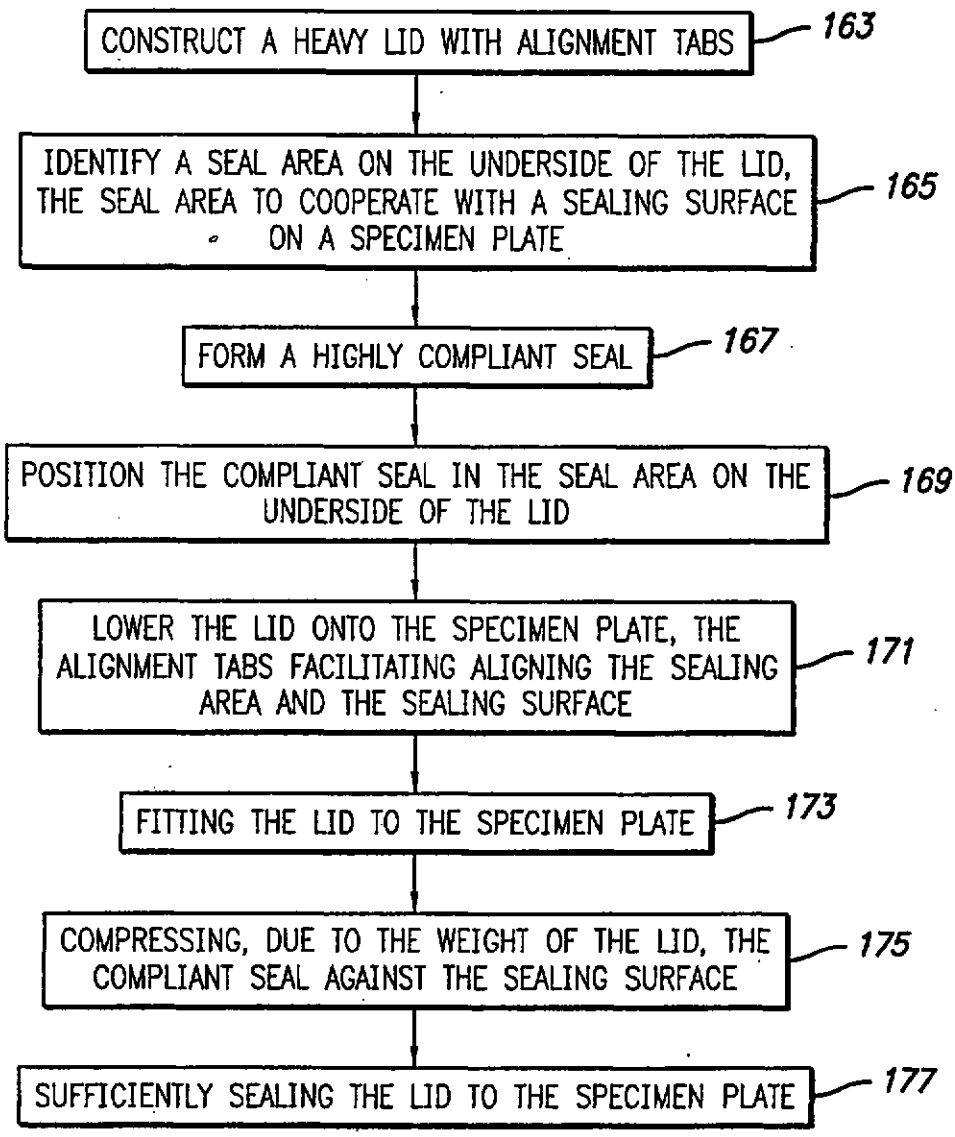
CONSTRUCT A HEAVY LID WITH ALIGNMENT TABS
163
IDENTIFY A SEAL AREA ON THE UNDERSIDE OF THE LID, THE SEAL AREA TO COOPERATE WITH A SEALING SURFACE ON A SPECIMEN PLATE
165
FORM A HIGHLY COMPLIANT SEAL
167
POSITION THE COMPLIANT SEAL IN THE SEAL AREA ON THE UNDERSIDE OF THE LID
169
LOWER THE LID ONTO THE SPECIMEN PLATE, THE ALIGNMENT TABS FACILITATING ALIGNING THE SEALING AREA AND THE SEALING SURFACE
171
FITTING THE LID TO THE SPECIMEN PLATE
173
COMPRESSING, DUE TO THE WEIGHT OF THE LID, THE COMPLIANT SEAL AGAINST THE SEALING SURFACE
175
SUFFICIENTLY SEALING THE LID TO THE SPECIMEN PLATE
177

FIG. 20

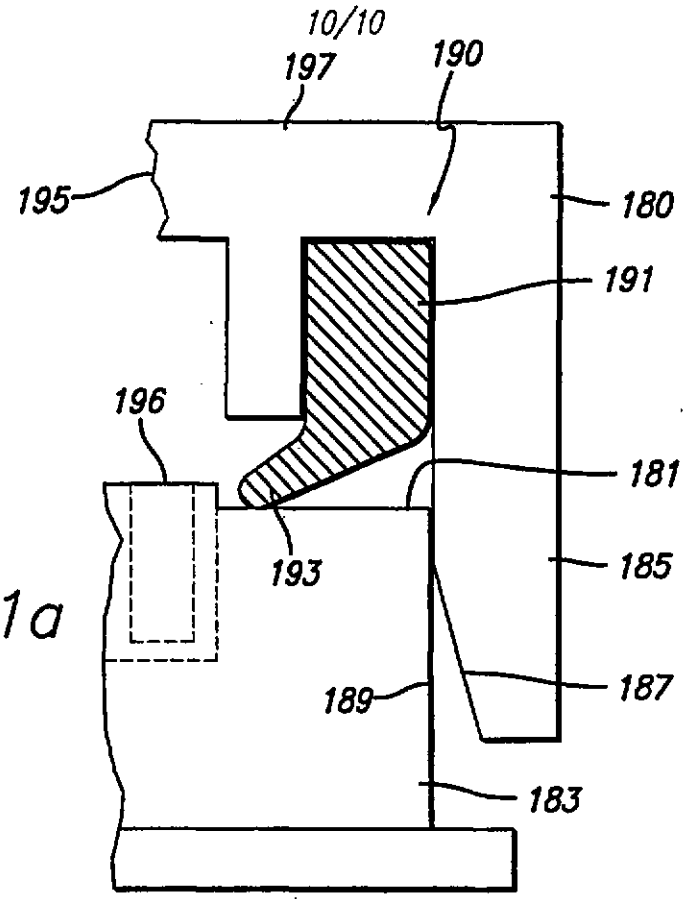

FIG. 21a

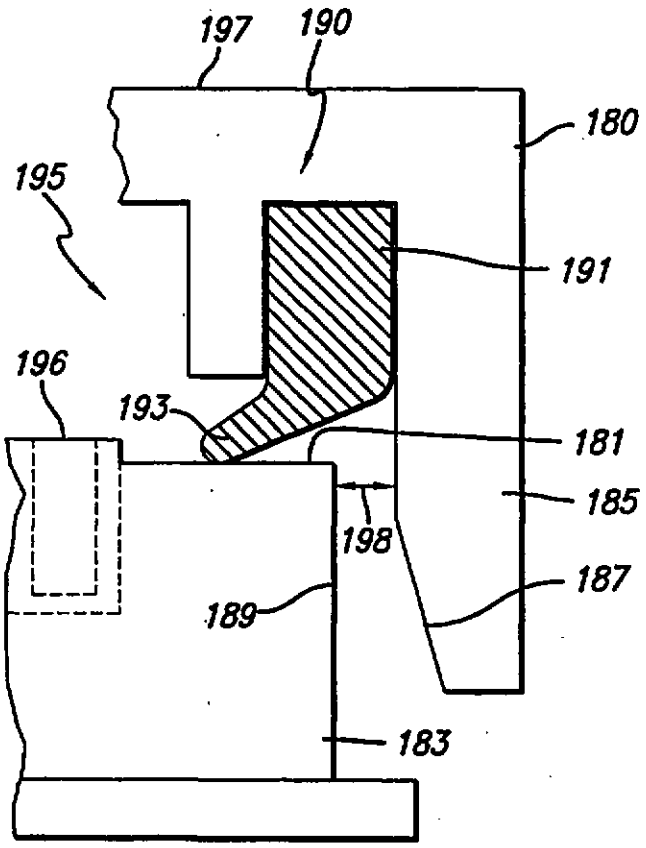

FIG. 21b