(12) INTERNATIONAL APPLICATION PUBLISHED UNDER THE PATENT COOPERATION TREATY (PCT)

(19) World Intellectual Property Organization
International Bureau

(43) International Publication Date
18 September 2025 (18.09.2025)

WIPO | PCT

(10) International Publication Number
WO 2025/193779 A1

(51) International Patent Classification:
*G06Q 20/38* (2012.01) *G06Q 20/36* (2012.01)
*G06Q 20/40* (2012.01)

(21) International Application Number:
PCT/US2025/019490

(22) International Filing Date:
12 March 2025 (12.03.2025)

(25) Filing Language: English

(26) Publication Language: English

(30) Priority Data:
18/605,715 14 March 2024 (14.03.2024) US

(71) Applicant: **CIRCLE INTERNET FINANCIAL LIMITED** [IE/IE]; 70 Sir John Rogerson's Quay, Dublin 2, D02 R296 (IE).

(72) Inventors: **BONEH, Naomi**; 70 Sir John Rogerson's Quay, Dublin 2, D02 R296 (IE). **CHUANG, Gee**; 70 Sir John Rogerson's Quay, Dublin 2, D02 R296 (IE). **WANG, Kaili**; 70 Sir John Rogerson's Quay, Dublin 2, D02 R296 (IE).

(74) Agent: **MCCARTHY, Ryan** et al.; P.O. Box 1022, Minneapolis, Minnesota 55440-1022 (US).

(81) Designated States *(unless otherwise indicated, for every kind of national protection available)*: AE, AG, AL, AM, AO, AT, AU, AZ, BA, BB, BG, BH, BN, BR, BW, BY, BZ, CA, CH, CL, CN, CO, CR, CU, CV, CZ, DE, DJ, DK, DM, DO, DZ, EC, EE, EG, ES, FI, GB, GD, GE, GH, GM, GT, HN, HR, HU, ID, IL, IN, IQ, IR, IS, IT, JM, JO, JP, KE, KG, KH, KN, KP, KR, KW, KZ, LA, LC, LK, LR, LS, LU, LY, MA, MD, MG, MK, MN, MU, MW, MX, MY, MZ, NA, NG, NI, NO, NZ, OM, PA, PE, PG, PH, PL, PT, QA, RO, RS, RU, RW, SA, SC, SD, SE, SG, SK, SL, ST, SV, SY, TH, TJ, TM, TN, TR, TT, TZ, UA, UG, US, UY, UZ, VC, VN, WS, ZA, ZM, ZW.

(84) Designated States *(unless otherwise indicated, for every kind of regional protection available)*: ARIPO (BW, CV,

(54) Title: CROSS-CHAIN CRYPTOCURRENCY ABSTRACTION USING CROSS-CHAIN TRANSFER PROTOCOL

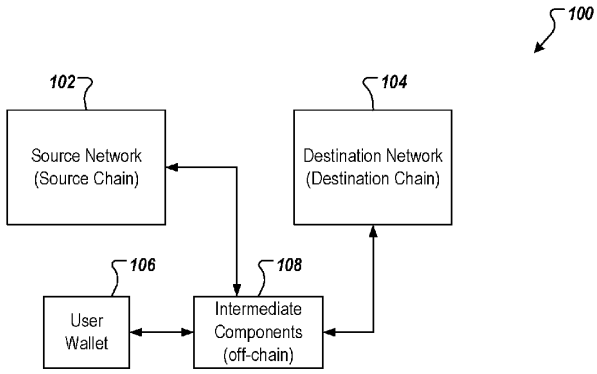


FIG. 1

(57) Abstract: Implementations are directed to cryptocurrency abstraction using a cross-chain transfer protocol (CCTP) between a source chain network and a destination chain network and can include receiving a user operation that indicates a paymaster and that includes an attestation, triggering, by the paymaster, minting of a number of tokens of a cryptocurrency on a destination chain, the number of tokens corresponding to a number of tokens of the cryptocurrency burned on a source chain attested to by the attestation, receiving, by the paymaster, the number of tokens of the cryptocurrency minted on the destination chain, and accounting, by the paymaster and using at least a portion of the number of tokens of the cryptocurrency, for computing resources expended on the destination chain to execute a transaction of the user operation.

WO 2025/193779 A1

[Continued on next page]

GH, GM, KE, LR, LS, MW, MZ, NA, RW, SC, SD, SL, ST, SZ, TZ, UG, ZM, ZW), Eurasian (AM, AZ, BY, KG, KZ, RU, TJ, TM), European (AL, AT, BE, BG, CH, CY, CZ, DE, DK, EE, ES, FI, FR, GB, GR, HR, HU, IE, IS, IT, LT, LU, LV, MC, ME, MK, MT, NL, NO, PL, PT, RO, RS, SE, SI, SK, SM, TR), OAPI (BF, BJ, CF, CG, CI, CM, GA, GN, GQ, GW, KM, ML, MR, NE, SN, TD, TG).

**Declarations under Rule 4.17:**

— *as to applicant's entitlement to apply for and be granted a patent (Rule 4.17(ii))*

**Published:**

— *with international search report (Art. 21(3))*