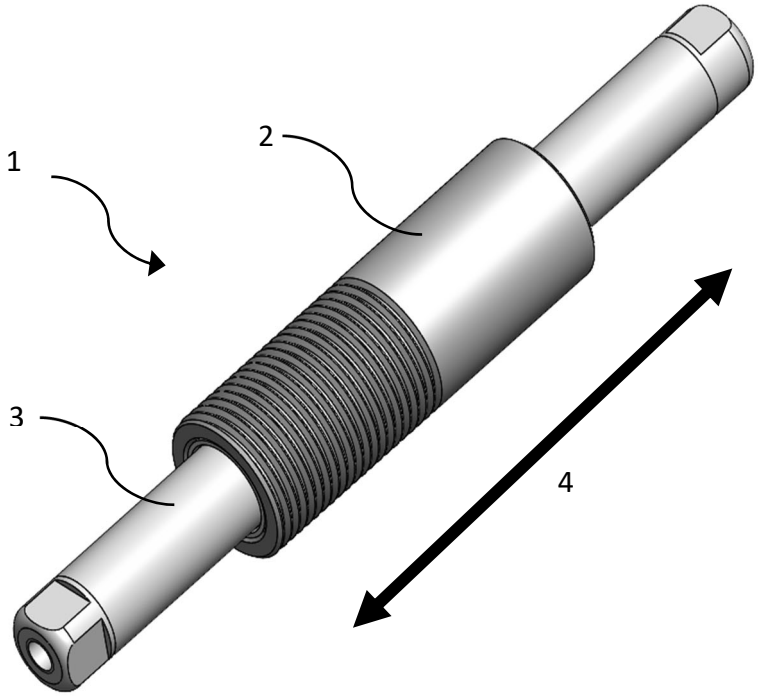

FIGURE 1

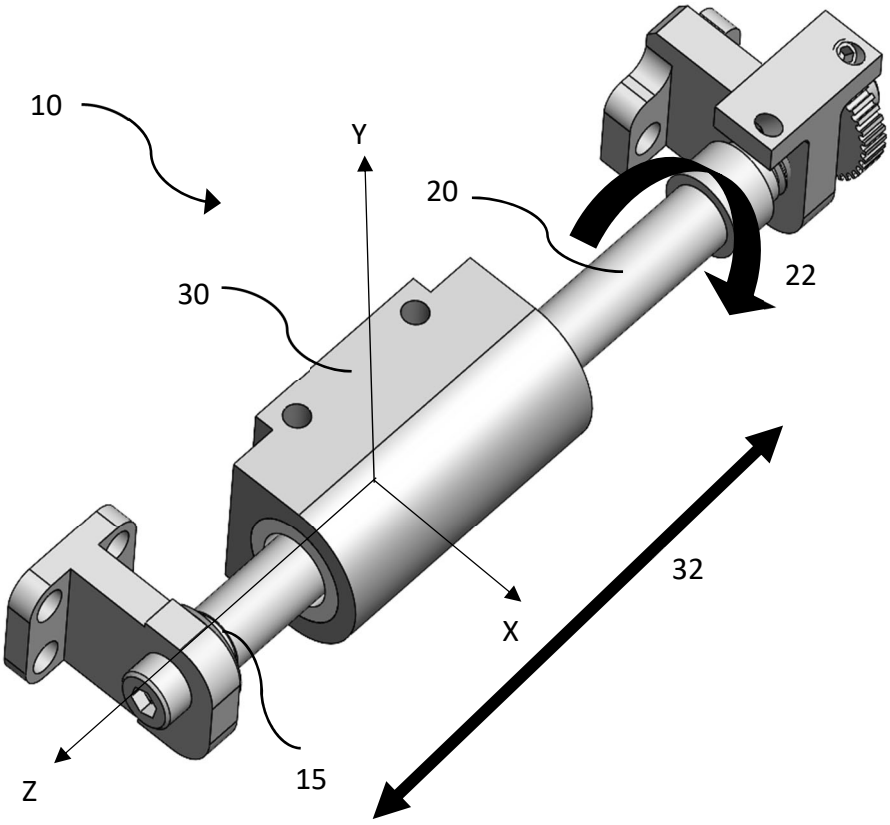

FIGURE 2

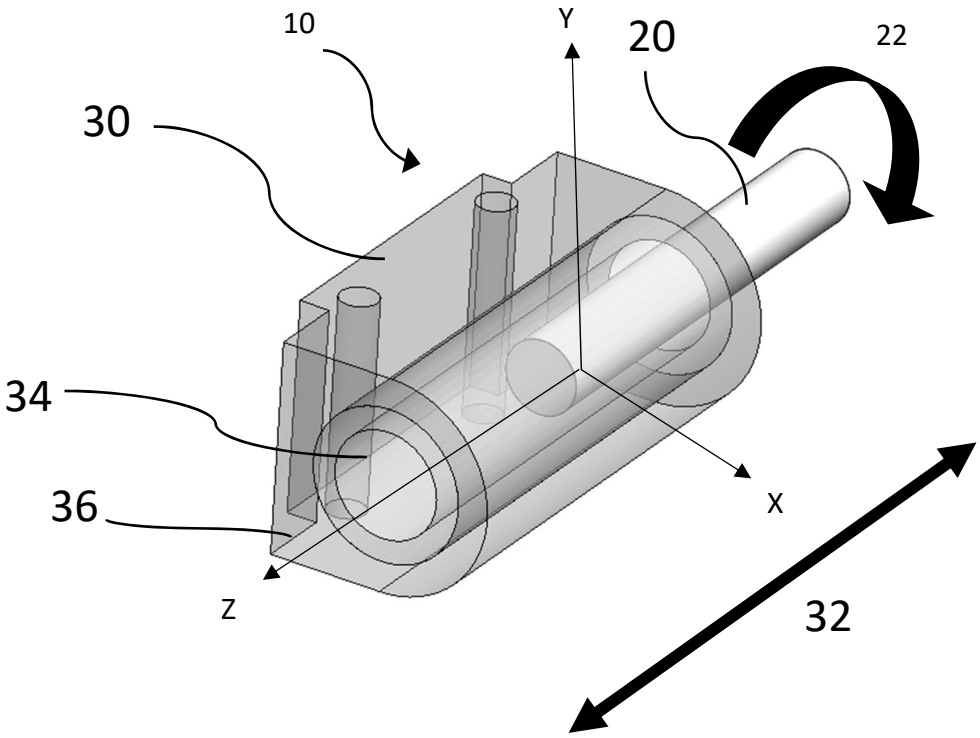

FIGURE 3A

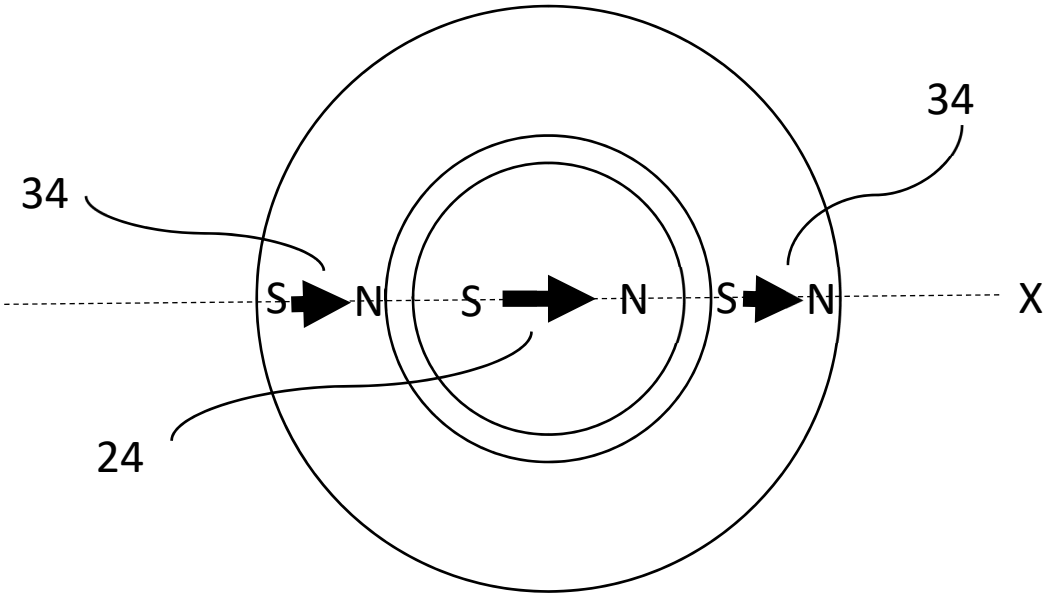

FIGURE 3B

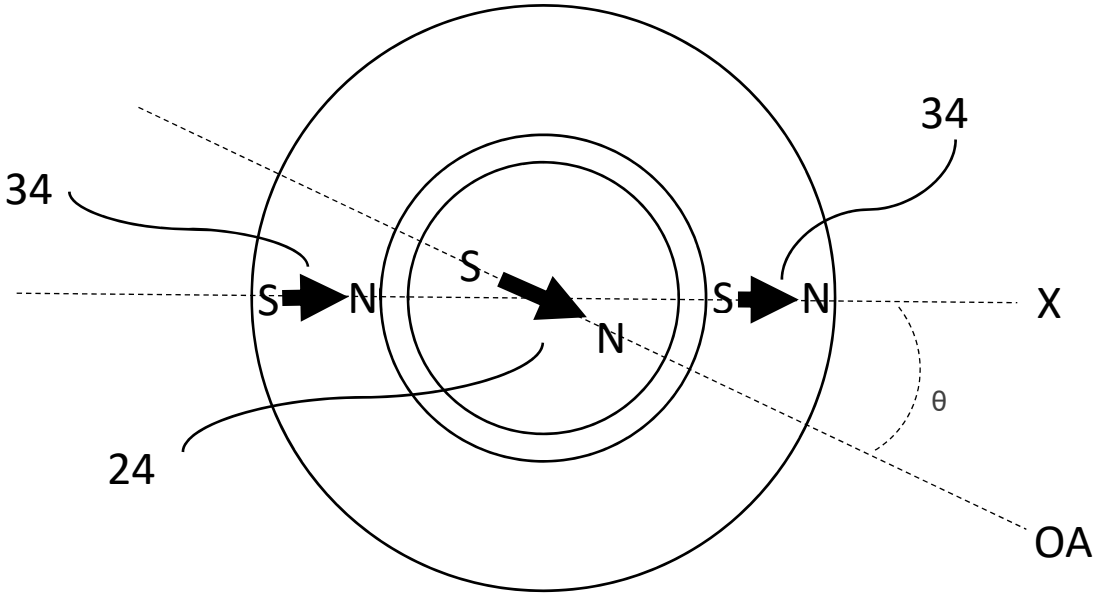

FIGURE 3C

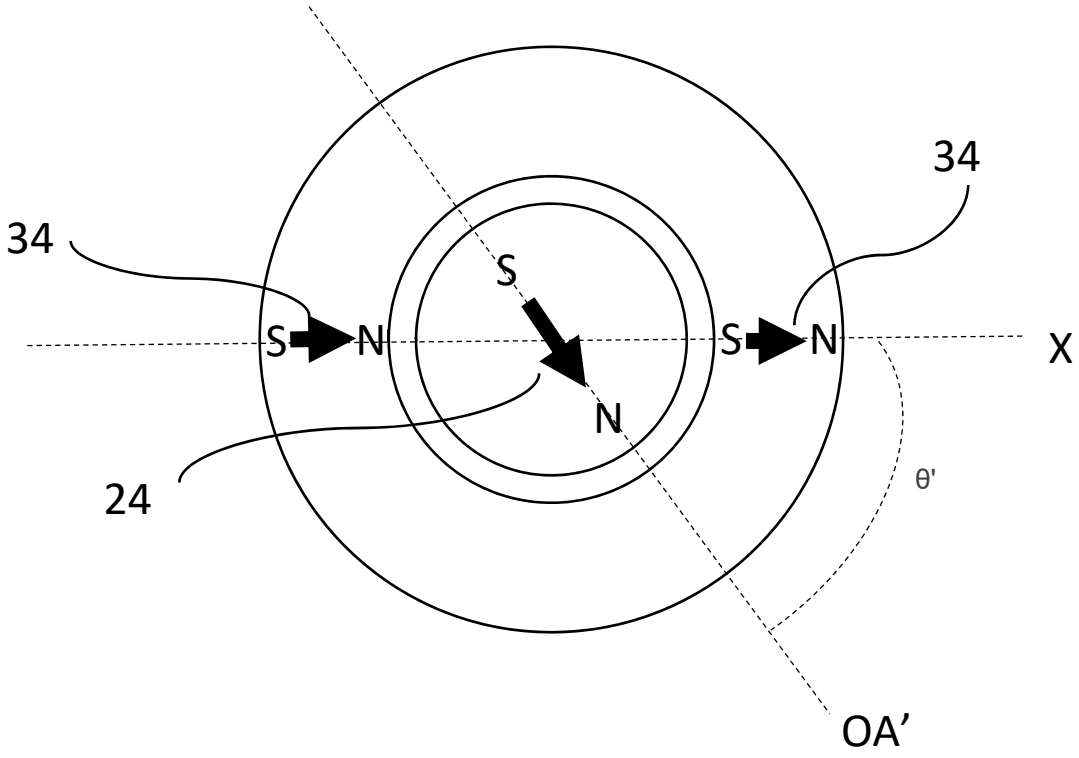

FIGURE 3D

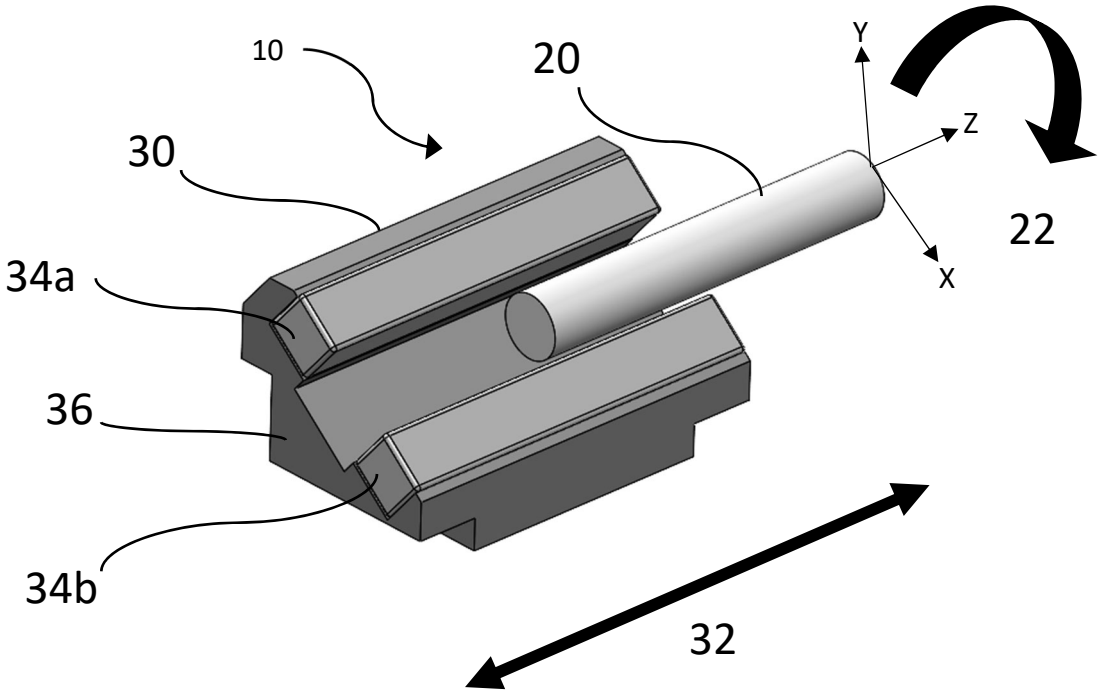

FIGURE 4A

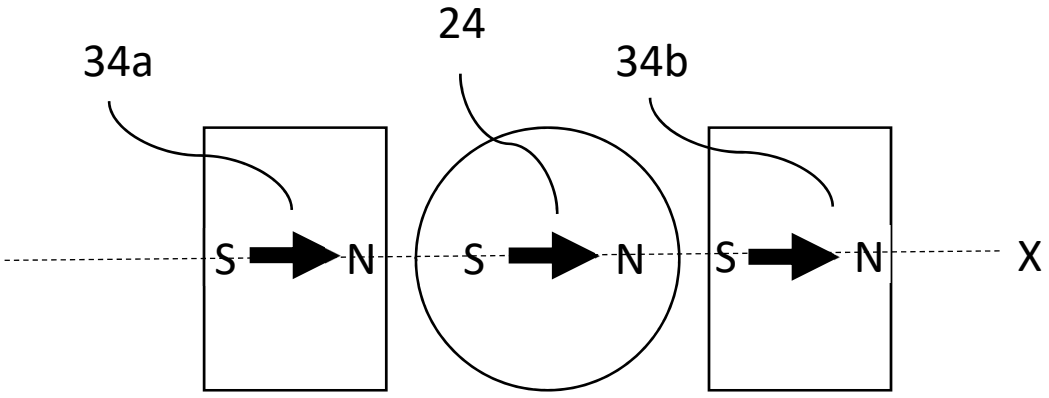

FIGURE 4B

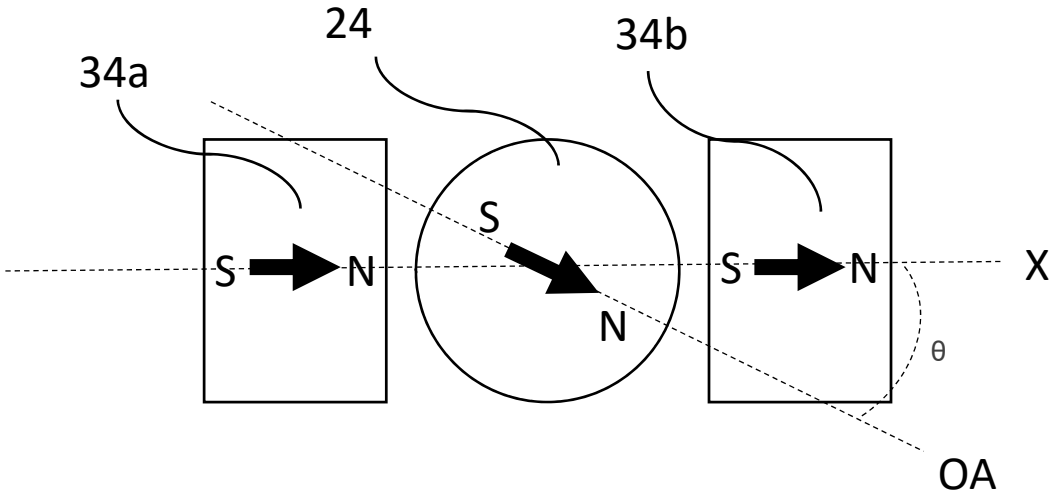

FIGURE 4C

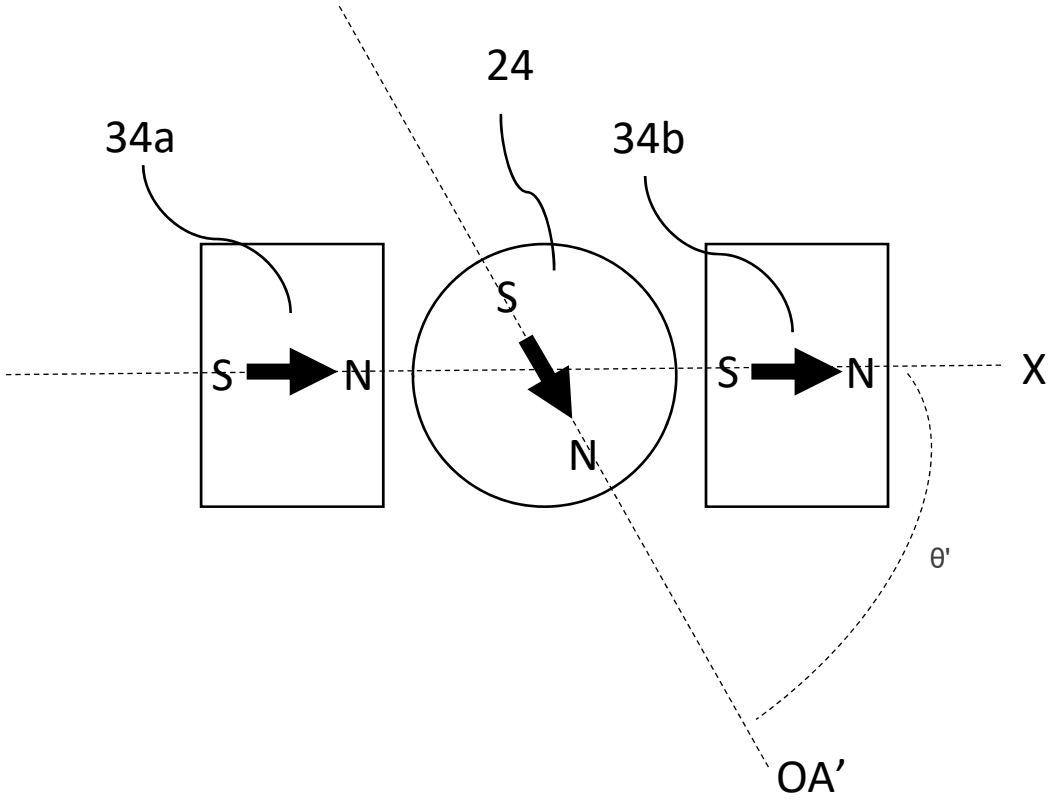

FIGURE 4D

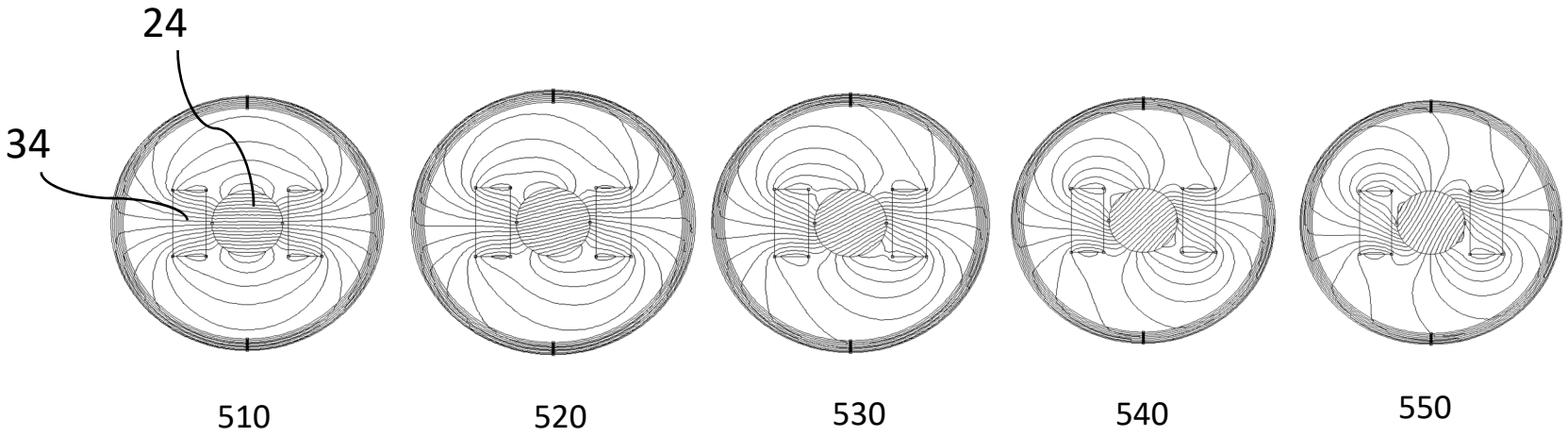

FIGURE 5

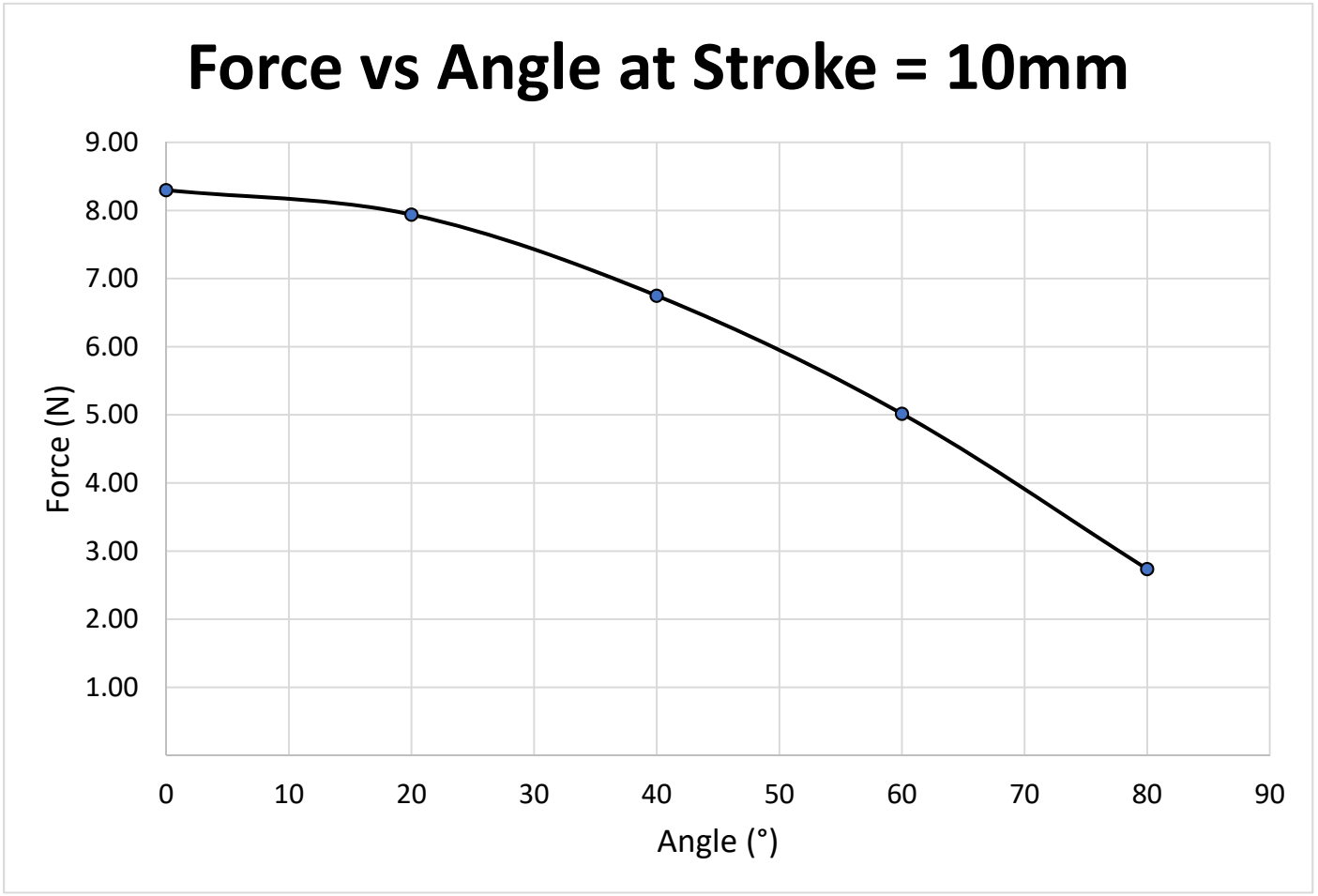
Force vs Angle at Stroke = 10mm
9.00
8.00
7.00
6.00
5.00
4.00
3.00
2.00
1.00
Force (N)
0
10
20
30
40
50
60
70
80
90
Angle (°)

FIGURE 6

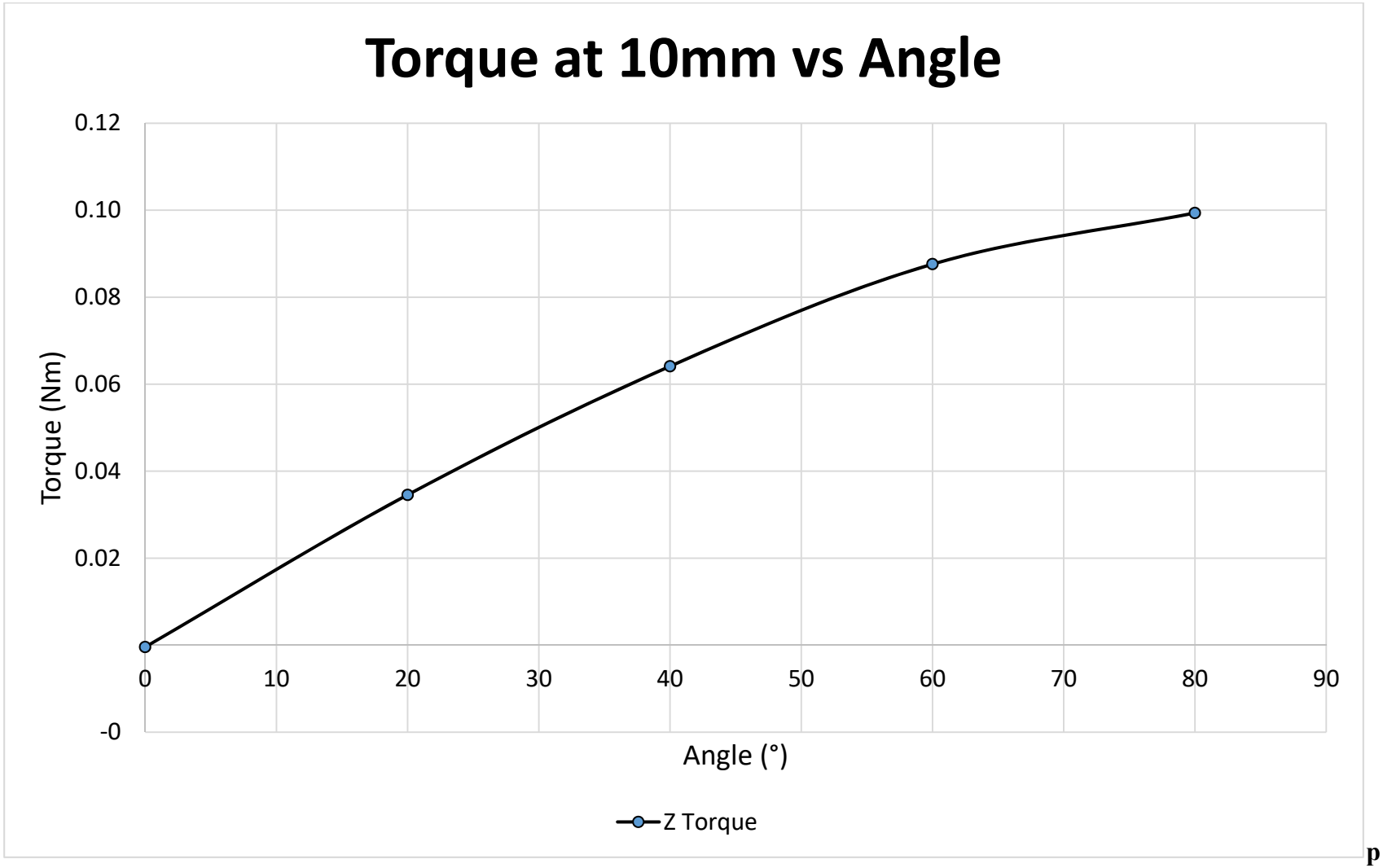
Torque at 10mm vs Angle
0.12
0.10
0.08
0.06
0.04
0.02
-0
Torque (Nm)
0
10
20
30
40
50
60
70
80
90
Angle (°)
Z Torque

p

FIGURE 7

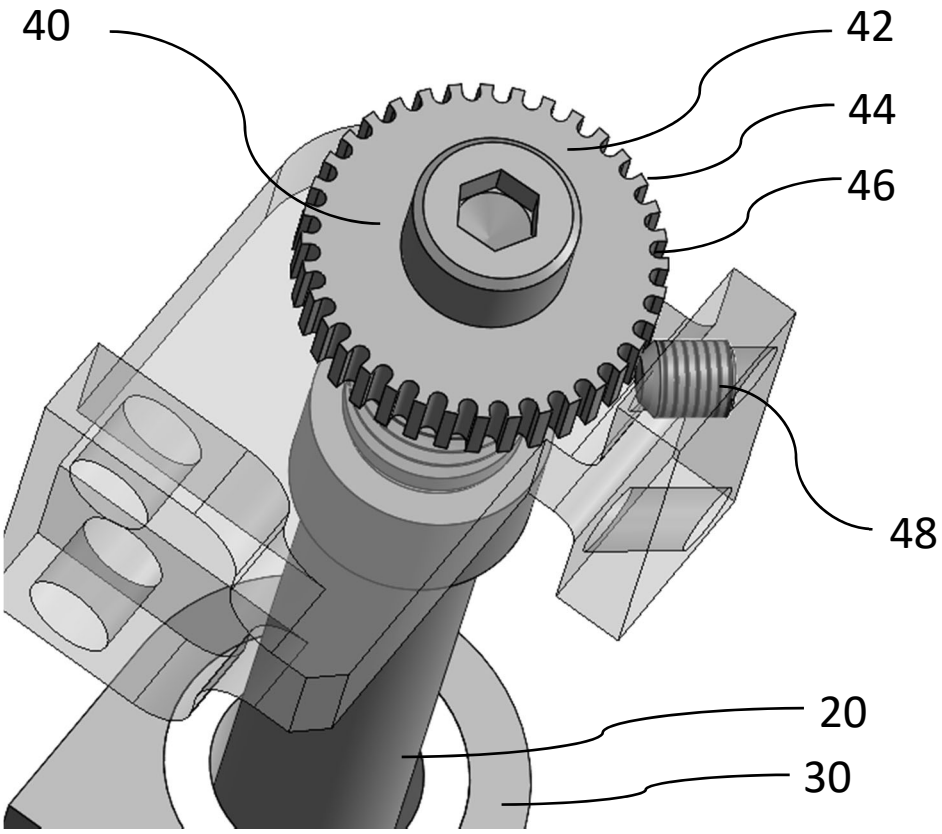

FIGURE 8

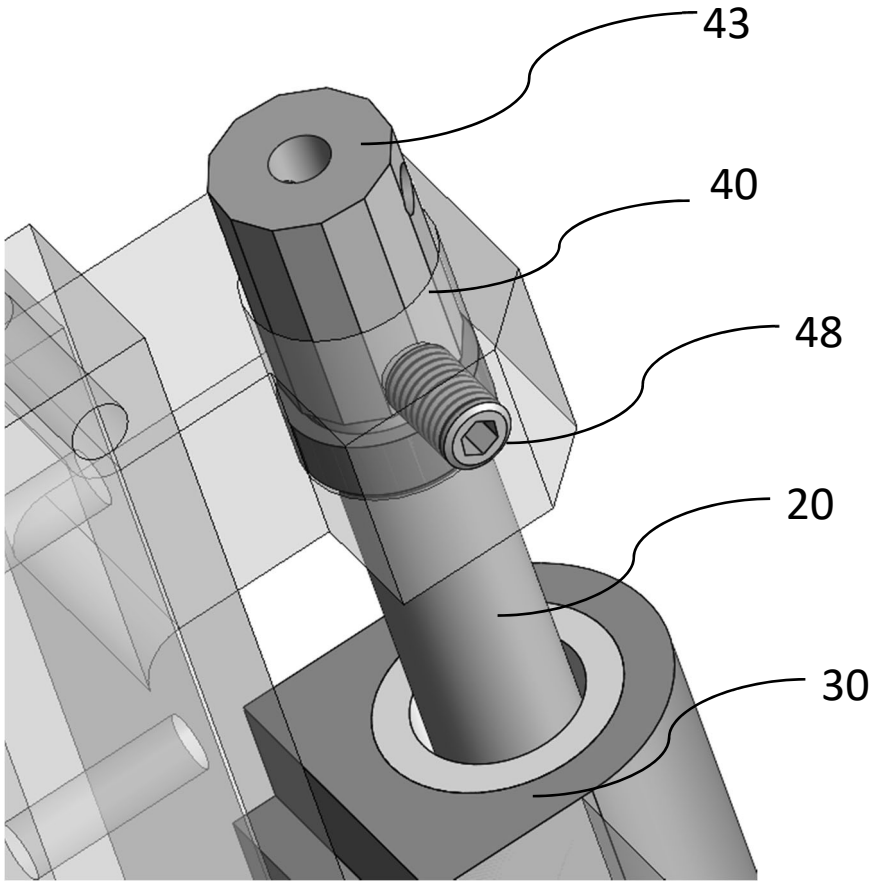

FIGURE 9

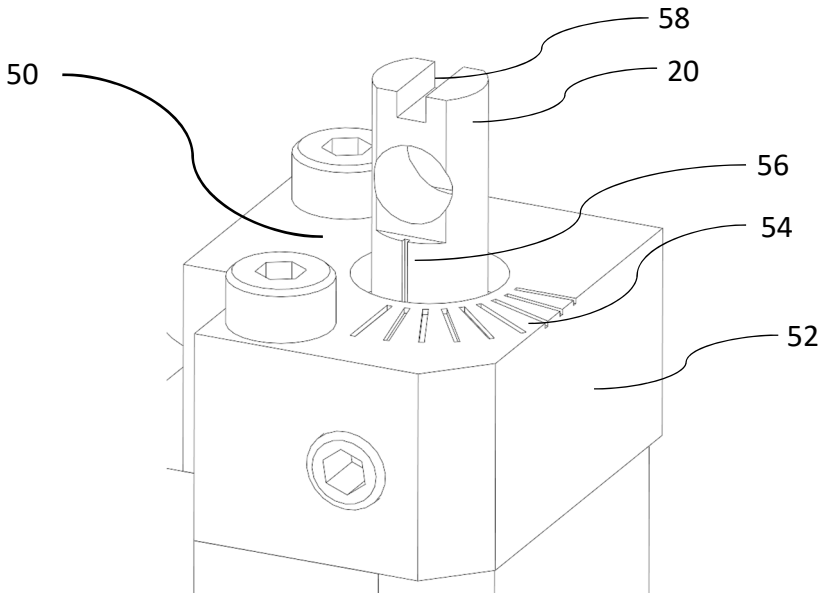

FIGURE 10A

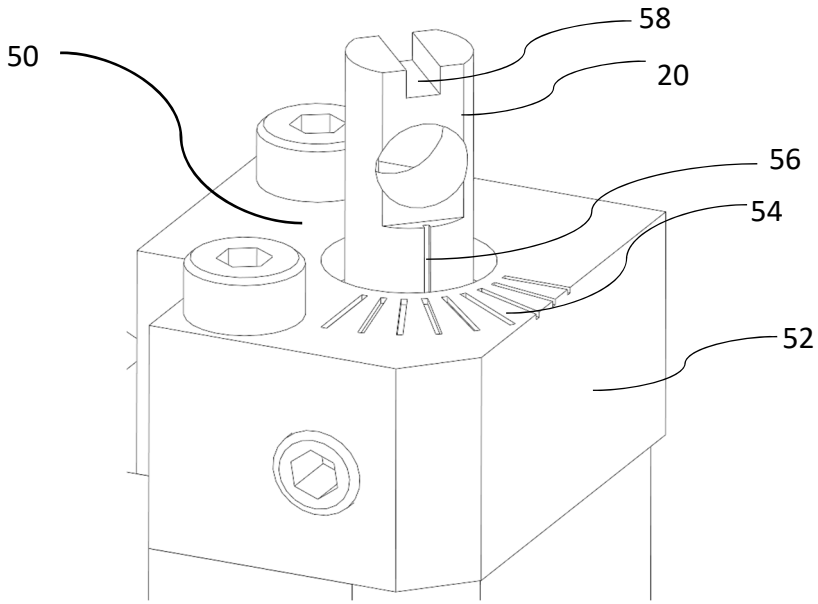

FIGURE 10B

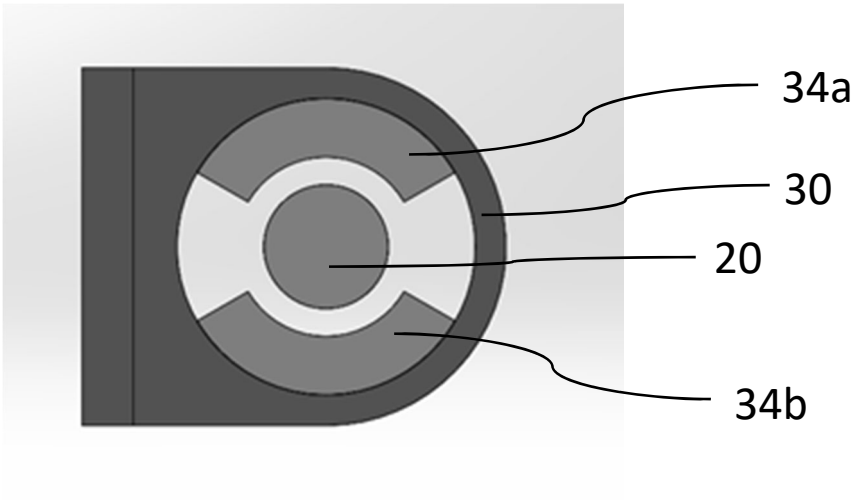

FIGURE 11A

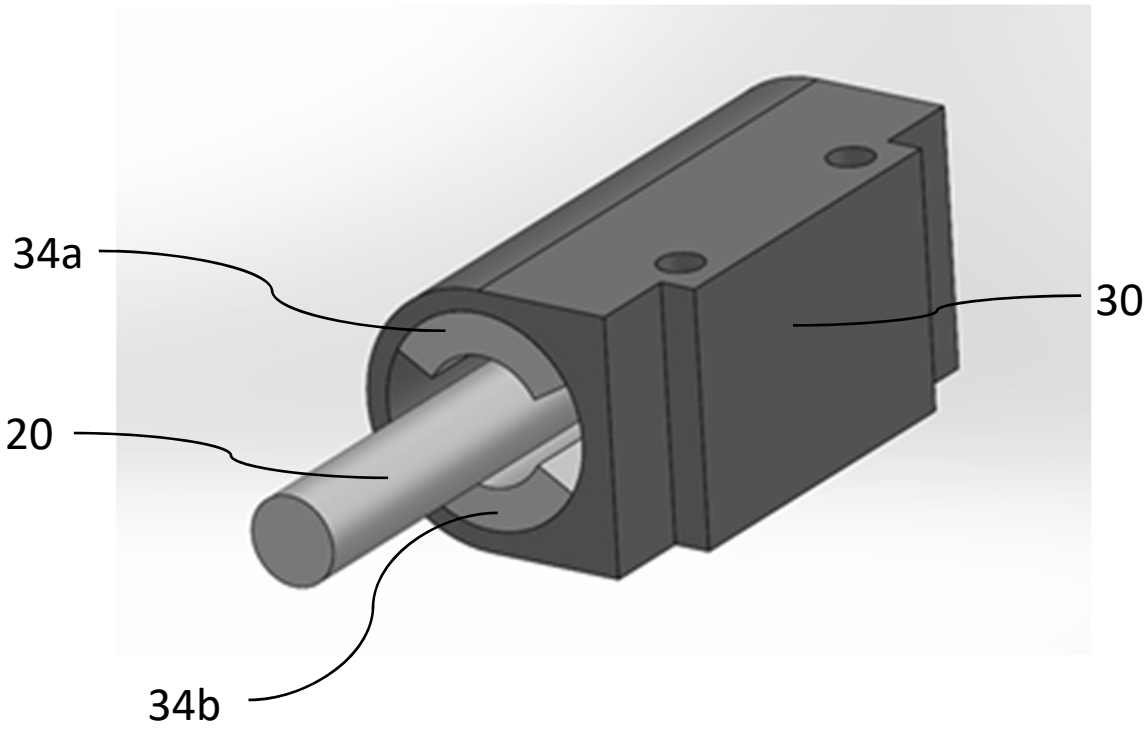

FIGURE 11B

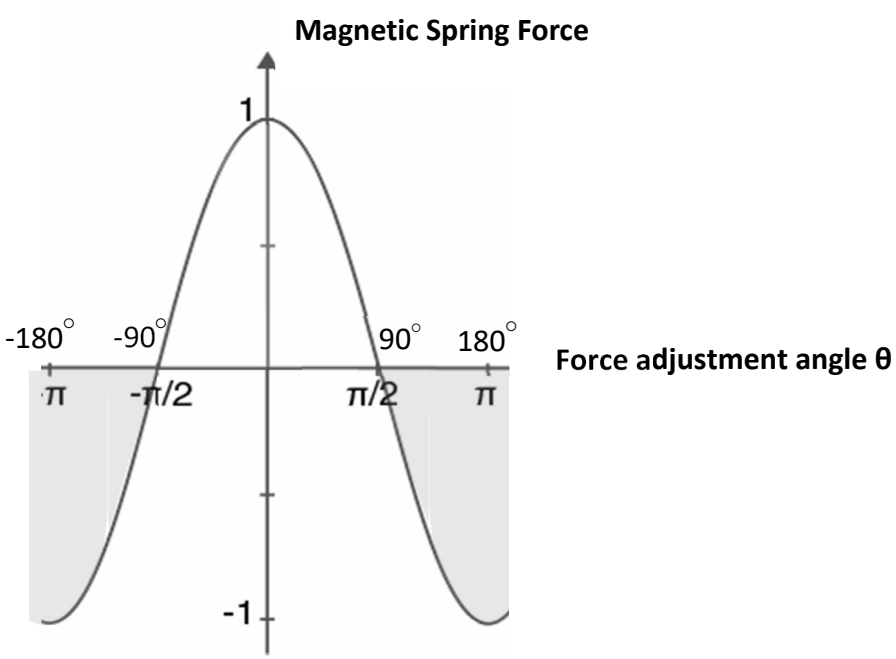
Magnetic Spring Force
1
-1
-180°
-90°
90°
180°
π
-π/2
π/2
π
Force adjustment angle θ

FIGURE 12