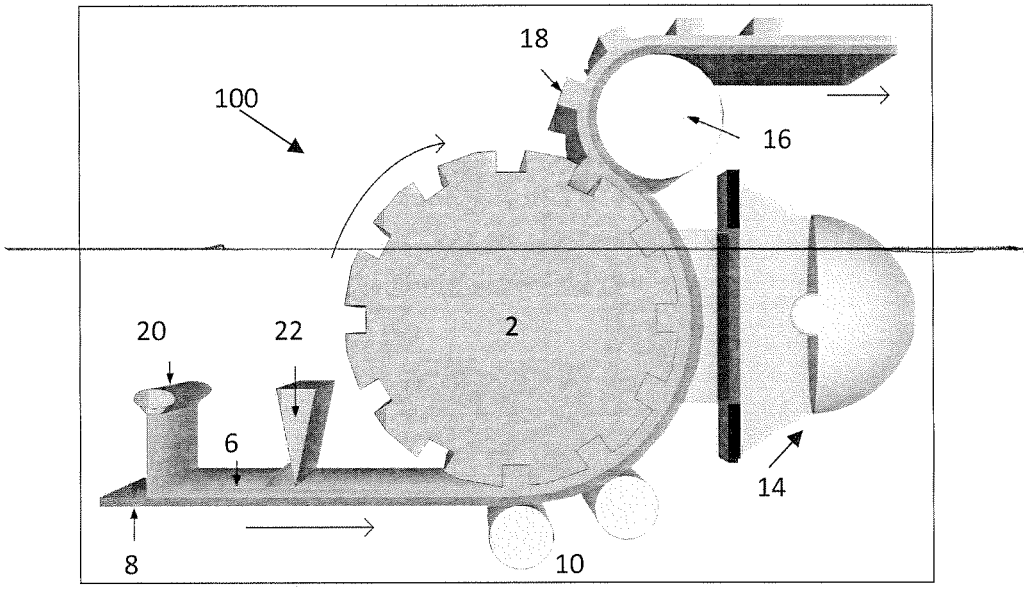

~~Fig. 1~~

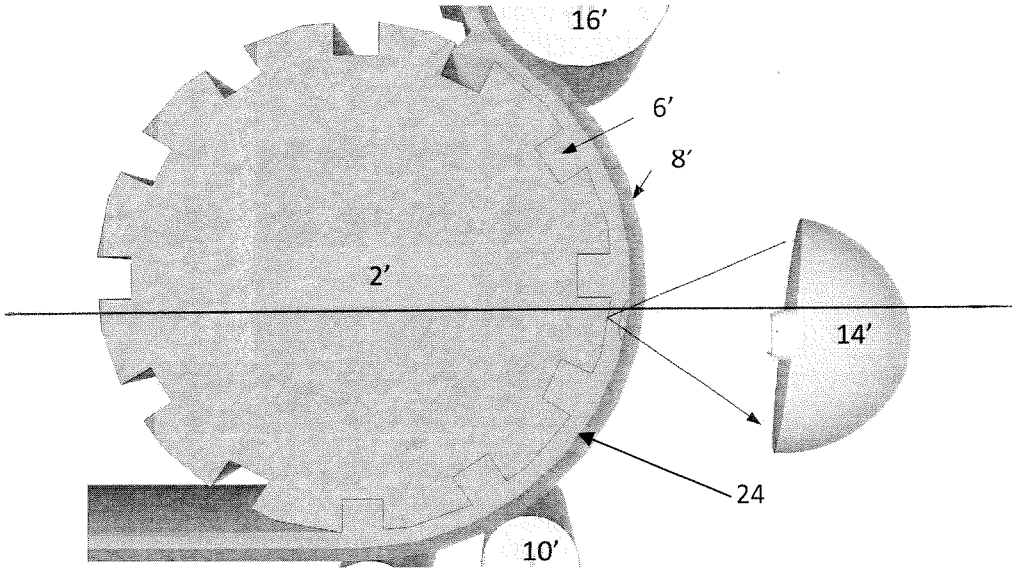

~~Fig. 2~~

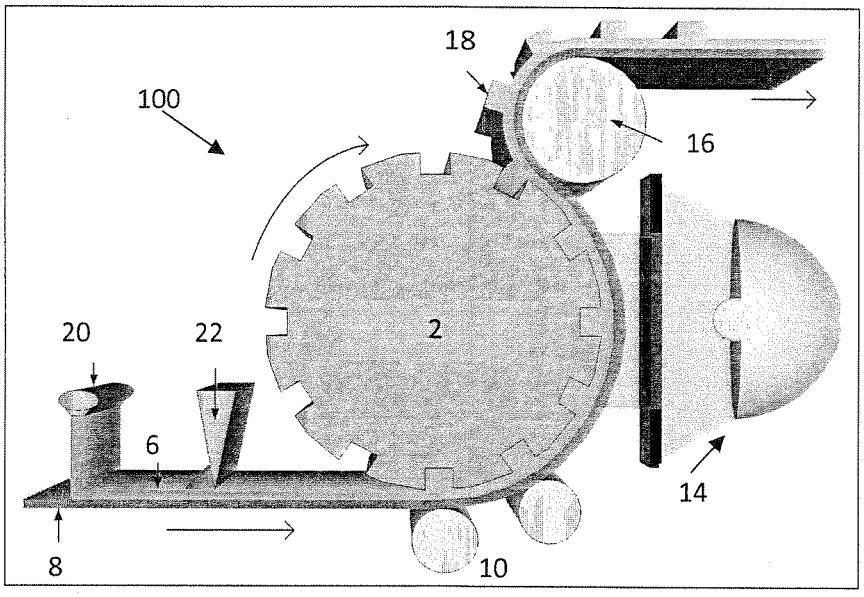

Fig. 1

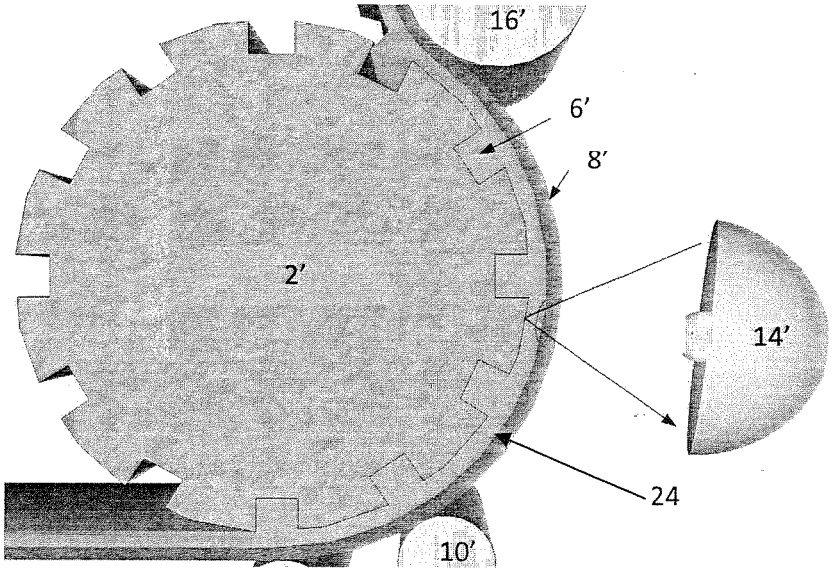

Fig. 2

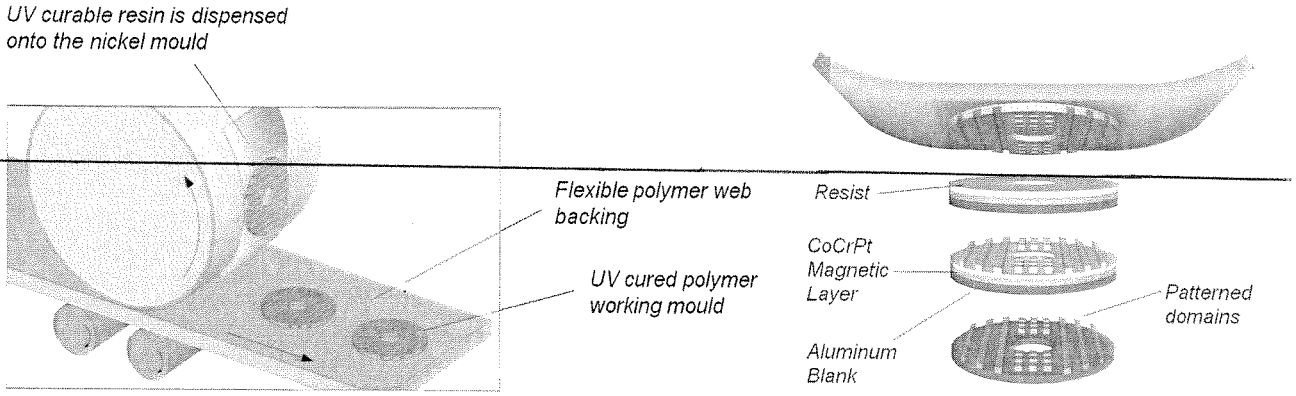

~~Fig. 5a~~ ~~Fig. 5b~~

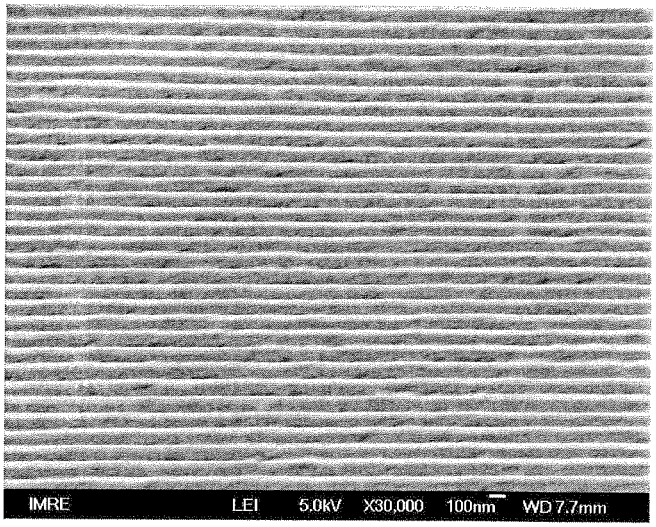

Fig. 6

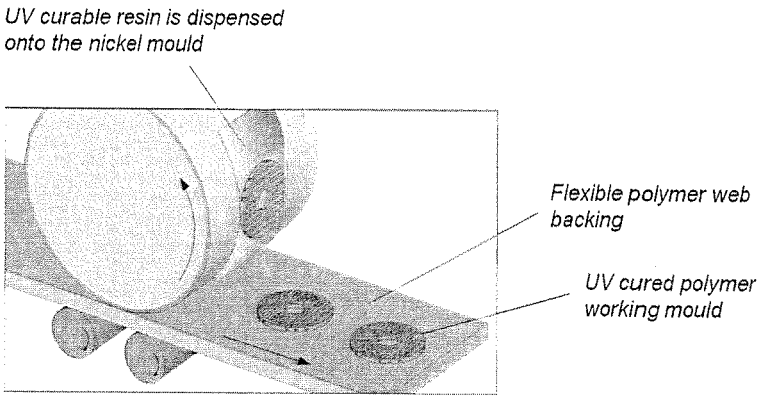

Fig. 5a

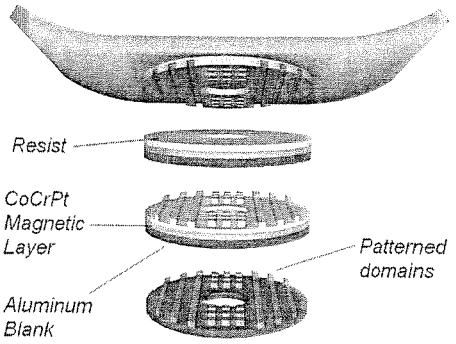

Fig. 5b

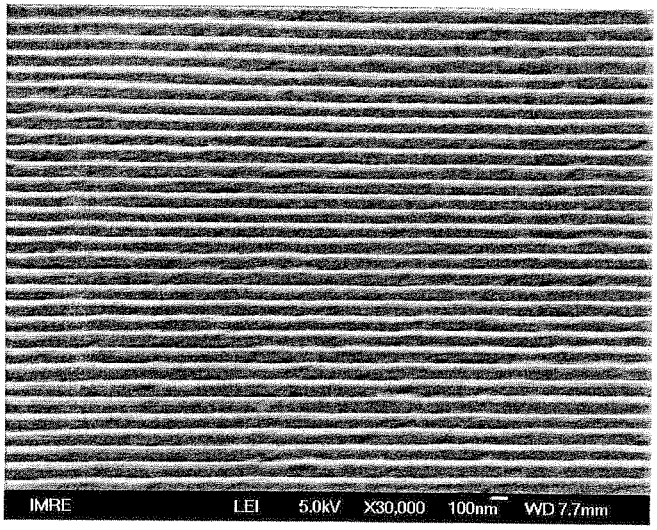

Fig. 6