(12) INTERNATIONAL APPLICATION PUBLISHED UNDER THE PATENT COOPERATION TREATY (PCT)

(19) World Intellectual Property Organization
International Bureau

(43) International Publication Date
16 December 2010 (16.12.2010)

PCT

(10) International Publication Number
WO 2010/144054 A1

(51) International Patent Classification:
B62B 3/14 (2006.01)

(21) International Application Number:
PCT/SG2010/000198

(22) International Filing Date:
27 May 2010 (27.05.2010)

(25) Filing Language: English

(26) Publication Language: English

(30) Priority Data:
200904012-2 10 June 2009 (10.06.2009) SG

(71) Applicant *(for all designated States except US)*: **STORE OF THE FUTURE PTE LTD** [SG/SG]; 9 Jurong Town Hall Road, #03-25, Singapore 609431 (SG).

(72) Inventors; and

(75) Inventors/Applicants *(for US only)*: **NG, Wei Yang** [SG/SG]; c/o Store of the Future Pte Ltd, 9 Jurong Town Hall Road, #03-25, Singapore 609431 (SG). **CHEE, Lay Hoon** [SG/SG]; c/o Store of the Future Pte Ltd, 9 Jurong Town Hall Road, #03-25, Singapore 609431 (SG). **ONG, James** [SG/SG]; c/o Store of the Future Pte Ltd, 9 Jurong Town Hall Road, #03-25, Singapore 609431 (SG).

(74) Agent: **DHALIWAL, S. RajDave Singh**; Marks & Clerk Singapore LLP, Tanjong Pagar, PO Box 636, Singapore 910816 (SG).

(81) Designated States *(unless otherwise indicated, for every kind of national protection available)*: AE, AG, AL, AM, AO, AT, AU, AZ, BA, BB, BG, BH, BR, BW, BY, BZ, CA, CH, CL, CN, CO, CR, CU, CZ, DE, DK, DM, DO, DZ, EC, EE, EG, ES, FI, GB, GD, GE, GH, GM, GT, HN, HR, HU, ID, IL, IN, IS, JP, KE, KG, KM, KN, KP, KR, KZ, LA, LC, LK, LR, LS, LT, LU, LY, MA, MD, ME, MG, MK, MN, MW, MX, MY, MZ, NA, NG, NI, NO, NZ, OM, PE, PG, PH, PL, PT, RO, RS, RU, SC, SD, SE, SG, SK, SL, SM, ST, SV, SY, TH, TJ, TM, TN, TR, TT, TZ, UA, UG, US, UZ, VC, VN, ZA, ZM, ZW.

(84) Designated States *(unless otherwise indicated, for every kind of regional protection available)*: ARIPO (BW, GH, GM, KE, LR, LS, MW, MZ, NA, SD, SL, SZ, TZ, UG, ZM, ZW), Eurasian (AM, AZ, BY, KG, KZ, MD, RU, TJ, TM), European (AL, AT, BE, BG, CH, CY, CZ, DE, DK, EE, ES, FI, FR, GB, GR, HR, HU, IE, IS, IT, LT, LU, LV, MC, MK, MT, NL, NO, PL, PT, RO, SE, SI, SK, SM, TR), OAPI (BF, BJ, CF, CG, CI, CM, GA, GN, GQ, GW, ML, MR, NE, SN, TD, TG).

Declarations under Rule 4.17:

— *of inventorship (Rule 4.17(iv))*

Published:

— *with international search report (Art. 21(3))*

(54) Title: COMMUNICATIONS-ENABLED SHOPPING CART

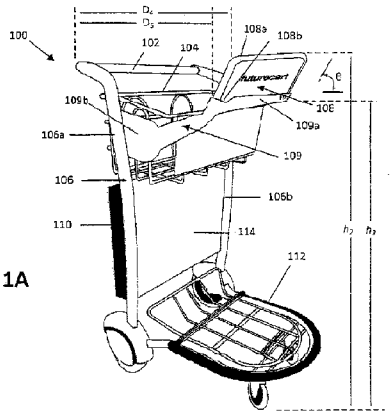

FIGURE 1A

(57) Abstract: The disclosed communications-enabled shopping cart (100) includes a handle (102) attached to a frame (106). There is also provided a display (108) having a base (108b) and being attached to the cart (100) by an attachment arm (109). The attachment arm (109) locates the display base (108b) higher than the handle (102) to ensure the cart (100) can be nested without requiring the display (108) to be moved. There is also a computing module configured to receive information from a remote source and to display the information on the display (108).

WO 2010/144054 A1