(12) INTERNATIONAL APPLICATION PUBLISHED UNDER THE PATENT COOPERATION TREATY (PCT)

(19) World Intellectual Property Organization
International Bureau

(43) International Publication Date
11 November 2004 (11.11.2004)

PCT

(10) International Publication Number
WO 2004/097287 A3

(51) International Patent Classification[7]: F16J 15/00, F17C 13/04, C09K 3/10

(21) International Application Number: PCT/JP2004/006043

(22) International Filing Date: 27 April 2004 (27.04.2004)

(25) Filing Language: English

(26) Publication Language: English

(30) Priority Data:
2003-125508 30 April 2003 (30.04.2003) JP
60/470,895 16 May 2003 (16.05.2003) US

(71) Applicant *(for all designated States except US)*: **SHOWA DENKO K.K.** [JP/JP]; 13-9, Shibadaimon 1-chome, Minato-ku, Tokyo, 1058518 (JP).

(72) Inventors; and

(75) Inventors/Applicants *(for US only)*: **TAGUCHI, Hiroyasu** [JP/JP]; c/o Production & Technology Control Department, Gases & Chemicals Division, SHOWA DENKO K.K., 5-1, Ogimachi, Kawasaki-ku, Kawasaki-shi, Kanagawa, 2100867 (JP). **KOSUGE, Yasuhiro** [JP/JP]; c/o Production & Technology Control Department, Gases & Chemicals Division, SHOWA DENKO K.K., 5-1, Ogimachi, Kawasaki-ku, Kawasaki-shi, Kanagawa, 2100867 (JP).

(74) Agent: **SUZUKI, Shunichiro**; S.SUZUKI & ASSOCIATES, Gotanda Yamazaki Bldg. 6F, 13-6, Nishigotanda 7-chome, Shinagawa-ku, Tokyo, 1410031 (JP).

(81) Designated States *(unless otherwise indicated, for every kind of national protection available)*: AE, AG, AL, AM, AT, AU, AZ, BA, BB, BG, BR, BW, BY, BZ, CA, CH, CN, CO, CR, CU, CZ, DE, DK, DM, DZ, EC, EE, EG, ES, FI, GB, GD, GE, GH, GM, HR, HU, ID, IL, IN, IS, JP, KE,

[Continued on next page]

(54) Title: APPARATUS AND METHOD FOR FEEDING HIGH-PURITY AMMONIA GAS

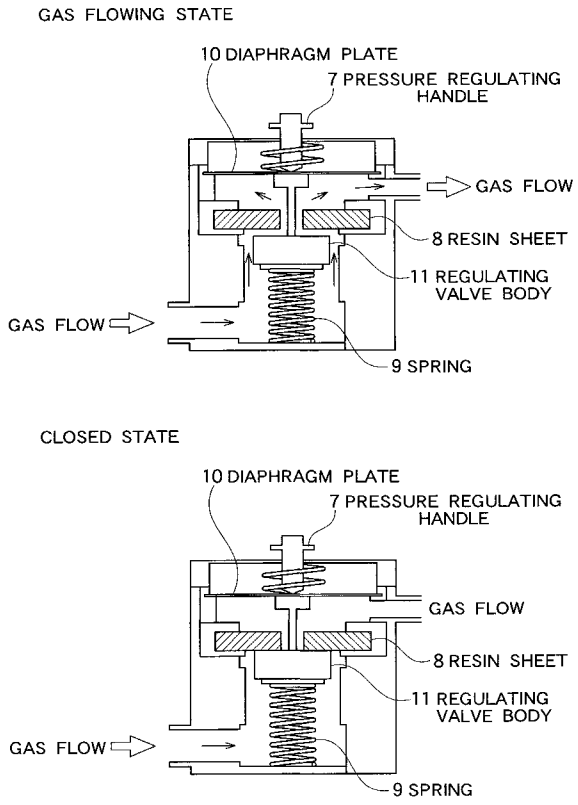

(57) Abstract: It is an object of the present invention to provide a system for feeding a high-purity ammonia gas, where a feeding apparatus free from generation of a particle due to corrosion and not causing the formation of a corrosion or reaction product inside the gas feeding path, such as cylinder valve, pressure regulator, pressure gauge, mass flow controller, line valve and filter, is appropriately employed for the gas flow path from a gas cylinder to a production apparatus, thereby realizing more safe and highly efficient feeding of the high-purity ammonia gas without deteriorating the purity and production of a semiconductor device having higher performance. The apparatus for feeding a high-purity ammonia gas of the present invention comprises the sealing part and/or the gas contacting part which comprise a halogen-free resin. The gas flow path of feeding a high-purity ammonia gas is constituted by the above-described high-purity ammonia gas-feeding apparatus, and thereby a high-purity ammonia gas can be fed to an apparatus for producing a semiconductor device without deteriorating the gas purity.

WO 2004/097287 A3

KG, KP, KR, KZ, LC, LK, LR, LS, LT, LU, LV, MA, MD, MG, MK, MN, MW, MX, MZ, NA, NI, NO, NZ, OM, PG, PH, PL, PT, RO, RU, SC, SD, SE, SG, SK, SL, SY, TJ, TM, TN, TR, TT, TZ, UA, UG, US, UZ, VC, VN, YU, ZA, ZM, ZW.

(84) Designated States *(unless otherwise indicated, for every kind of regional protection available)*: ARIPO (BW, GH, GM, KE, LS, MW, MZ, NA, SD, SL, SZ, TZ, UG, ZM, ZW), Eurasian (AM, AZ, BY, KG, KZ, MD, RU, TJ, TM), European (AT, BE, BG, CH, CY, CZ, DE, DK, EE, ES, FI, FR, GB, GR, HU, IE, IT, LU, MC, NL, PL, PT, RO, SE, SI, SK, TR), OAPI (BF, BJ, CF, CG, CI, CM, GA, GN, GQ, GW, ML, MR, NE, SN, TD, TG).

Published:

— *with international search report*

— *before the expiration of the time limit for amending the claims and to be republished in the event of receipt of amendments*

(88) Date of publication of the international search report:
16 December 2004

For two-letter codes and other abbreviations, refer to the "Guidance Notes on Codes and Abbreviations" appearing at the beginning of each regular issue of the PCT Gazette.