Air Treatment

The subject invention relates to air treatment in passenger cabins of aircraft such, for example, as an aeroplane.

Aircraft which incorporate pressurisable cabins comprise cabin ventilation systems, which systems are operable to introduce air to the cabin at first locations thereof, to withdraw air from the cabin at second locations thereof, to vent overboard a proportion of the air withdrawn from the cabin and to compress air from outboard the aircraft, the so compressed air forming a proportion of the air introduced to the cabin. Such ventilation systems comprise air conditioning packs, usually located beneath the cabin floor, and air-flow ducting for the delivery of air from the packs to said first locations of the cabin and for the delivery of air from said second locations of the cabin to the packs.

The air conditioning packs comprise filters, which filters serve the purpose of effecting removal from air withdrawn from, and to be introduced back into, the cabin of components carried in the air such as those the result of the smoking of cigarettes in the cabin.

The quantity of air in an aircraft cabin can be very considerable. In a Boeing 747 aircraft, for example, the cabin contains about 900kg of air. Thus the power requirement for operating the ventilation system of a

This Sheet Has Been Replaced ET HAS BEEN PLACED

passenger aircraft can be considerable. Even in the case of smaller passenger aircraft it is an operational requisite to minimise the power requirement of the cabin ventilation system.

An object of the subject invention is the provision of an improved passenger cabin air quality. It is a further object of the subject invention to provide improved means of maintaining an acceptable air quality in a passenger cabin.

The subject invention provides a combination of a passenger seat and air treatment means, said passenger seat being located in a pressurisable aircraft passenger cabin, said air treatment means comprising air inlet means in air-flow communication with the environment at and to the fore of said seat, air induction means, air filtration means and air outlet means, and said induction means being operable to cause air flow from said environment via said inlet means, through said filtration means and to said outlet means.

The said environment is bounded to the fore of said seat by bounding means, which bounding means can take the form of the backrest of a second passenger seat, or can take the form of bulkhead or partition means. The air inlet means is at said bounding means. In the case where the passenger seat is adjacent the outer wall of the pressurisable aircraft passenger cabin, the bounding means can take the form of a portion of the aircraft fuselage wall, in which case the air inlet may be at the outer wall

THIS SHEET HAS BEEN REPLACED

of the cabin. Thus air can be drawn directly from the said environment by the air treatment means, rather than passing from said environment to another location in the cabin before being withdrawn from the cabin.

The air filtration means may be, for example, electrostatic, polarised or passive air filtration means.

A convenient arrangement is for the air inlet means, the air induction means, the air filtration means and the air outlet means to be assembled together as a single air treatment unit. Such unitary assemblage is advantageously mounted at, and preferably in, the said backrest or bulkhead means with the air inlet means opening at the rear of the backrest or bulkhead means in the usual case in which the first mentioned seat is to the rear of the second seat or the bulkhead means. Suitably, the air inlet means comprises grill means, which grill means is flush or substantially flush with the rear face of the backrest or bulkhead means.

The subject invention further provides an aircraft passenger seat in combination with air treatment means, said air treatment means comprising air inlet means, air induction means, air filtration means and air outlet means.

The air outlet means of the air treatment means may be located relatively of cabin air withdrawal means of the cabin ventilation system such that air issuing from the outlet means is drawn from the cabin via the withdrawal means.

This Sheet Has Been Replaced



This Sheet Has Been Replaced
T HAS BEEN
4
N

Air filtration means of the air treatment means may be provided by air filtration means of the cabin ventilation system.

Air induction means of the air treatment means may be provided by air induction means of the cabin ventilation system.

In order that the subject invention may be clearly understood and readily carried into effect, reference will now be made, by way of example, to the diagrammatic drawings hereof, in which:-

Figure 1 shows two aircraft passenger seats installed in a passenger cabin of an aircraft, an aeroplane for example;

Figure 2 shows, in section and to an enlarged scale, an upper portion of the backrest of the rightward of the seats shown in Figure 1;

Figure 3 shows the upper portion of the backrest of Figure 2 as viewed in the direction of arrow A of Figure 2; and

Figure 4 shows a rearward view of a row of three aircraft passenger seats.

In Figure 1 the first and second aircraft passenger seats are designated by reference numerals 1 and 2. The seats 1 and 2 are secured to aircraft cabin floor 3, with seat 1 being positioned directly behind seat 2. Reference numeral 4 designates a cabin bulkhead or partition.

Mounted in the backrest 5 of seat 2 is an air treatment unit 6. The unit 6 comprises two air inlet

THIS SHEET HAS BEEN REPLACED

grills 7 and 8 (see Figure 3), mesh grills for example, behind each of which is located an electrostatic filter, the filter associated with inlet grill 7 being designated by reference numeral 9 in Figure 2. The unit 6 also comprises air induction means, taking the form of an induction fan 10, a first duct 11, extending from the aforementioned filters to the air inlet side of the fan 10, an air outlet baffle 12 and a second duct 13 which extends from the air outlet side of the fan 10 to the baffle 12. The unit 6 further comprises an electric motor (not shown) arranged to drive the fan 10.

Wiring (not shown) runs within the backrest 5 for the provision of an electrical supply to the aforesaid motor and to the grids (not shown) of the aforesaid electrostatic filters.

When the fan 10 is in operation, air from the environment at the rear of the backrest 5, i.e. to the fore of seat 1, is drawn continuously through the grills 7,8 and the electrostatic filters associated therewith and is expelled *via* the duct 13, the presence of the baffle 12 causing the expelled air to flow in a downward direction. Thus, should a passenger in seat 1 be smoking a cigarette, tobacco smoke is drawn into the unit 6 with the continuous airflow therethrough, whereupon tobacco smoke components are trapped on the aforesaid electrostatic filters.

The backrest of each cabin seat behind which is positioned a smoking designated seat accommodates an air

This Sheet Has Been Replaced



treatment unit as per unit 6, together with the associated electrical wiring.

Should a smoking designated seat be positioned immediately to the rear of a cabin bulkhead or partition, an air treatment unit as per unit 6 is mounted of the bulkhead. Such a unit, designated by reference numeral 14, is shown mounted in bulkhead 4 (Figure 1).

By use of the backrest or bulkhead mounted air treatment units, when a person smoking a cigarette is seated in a smoking designated seat, tobacco smoke is removed directly from the location of the generation thereof. Absent the use of such air treatment units, the whole tobacco smoke is moved within the cabin from said location by the air circulating under the action of the cabin ventilation system. The units provide the further advantage of reducing the load on the cabin ventilation system.

If a stowable table is mounted at the rear of seat 2, the location of the baffle 12 should preferably be no higher than the position occupied by the table when folded out for use. Similarly, if a stowable table is provided for a seat positioned behind (to the left viewing Figure 1) the bulkhead 4, the air outlet baffle of the air treatment unit 14 should preferably be no higher than the position occupied by the table when folded out or fitted for use.

The aircraft passenger seats shown in Figure 4 are designated by reference numerals 15, 16 and 17. Reference

THIS SHEET HAS BEEN REPLACED

numerals 18 and 19 designate respectively the aircraft fuselage wall and the cabin floor. Reference numeral 20 designates a cabin air withdrawal grill of the cabin ventilation system. Air introduction means (not shown) of the cabin ventilation system are located at upper locations of the cabin. Two air inlet grills are mounted at the rear of each of the backrests of the seats 15-17, which grills are designated by reference numerals 21, 22; 23,24; and 25,26. An air-flow duct extends downwardly, within the respective backrest, from each of the grills 21-26, these air-flow ducts being designated by reference numerals 27, 28; 29,30; and 31,32. At the lower ends thereof the ducts 27-32 communicate with a common air-flow duct 33, which duct 33, extends to the air inlet side of an induction fan unit 34, which unit 34 provides air induction means. From the air outlet side of the fan unit 34 there extends an air-flow duct 35, the distal end of which duct 35 is downwardly directed towards the cabin air withdrawal grill 20.

With the fan unit 34 in operation air is drawn continuously through the air inlet grills 21-26, whereby should a passenger in a seat immediately behind one of the seats 15-17 be smoking a cigarette, tobacco smoke too is drawn through the air inlet grills of the backrest of said one of the seats. The smoke laden air is expelled by the fan unit 34 via the air-flow duct 35, and is thereupon drawn from the cabin via the grill 20.

This Sheet Has Been Replaced

THIS SHEET HAS BEEN REPLACED

A filter may be installed in duct 35 or in duct 33 downstream of the juncture of ducts 27,28 with duct 33. Alternatively, a large filtration unit, located, for example, beneath cabin floor 19, may serve to filter smoke laden air drawn from all of the air inlet grills mounted at the rear of the backrests of a plurality of rows of seats. In this alternative case, instead of a fan unit as per unit 34 being associated with each row of seats, a large air induction unit, located, for example, below the cabin floor 19 may be utilised to draw air through all of said air inlet grills and through the said large filtration unit.

The said large filtration unit may be that of an air conditioning pack of the cabin ventilation system.

If an aforesaid large filtration unit is utilised, the ducting serving to convey air thereto may be separate from ducting of the cabin ventilation system.

As will be realised by the skilled-in-the-art addressee, should a row of seats as per seats 15-17 of Figure 4 be positioned to the rear of a cabin bulkhead, air treatment elements generally similar to those depicted in Figure 4 would be associated with the bulkhead, whereby should a passenger in one of the seats be smoking a cigarette, tobacco smoke would be drawn through air inlet grills at the bulkhead, which smoke would be withdrawn from the cabin via withdrawal grill means as per grill 20 of the cabin ventilation system.

This Sheet Has Been Replaced

THIS SHEET HAS BEEN REPLACED

If a passenger seat comprises a headrest, an air treatment unit as per unit 6 or air inlet grills as per 21-26 could be installed at the headrest. Thus references herein to "backrest" encompass "headrest".

As described and shown hereinabove, two air inlet grills are located at the rear of a backrest. As will be realised by the skilled-in-the-art addressee, as an alternative a single air inlet grill could be employed, suitably a horizontally disposed grill of elongate conformation.

Co-pending U.K. Patent Application No. 9508252.5 standing in the name of the present Applicant discloses a passenger seat in combination with air treatment means. The air treatment means comprises air inlet means, air induction means, air filtration means and air outlet means. The air inlet means of the air treatment means is at the arm rest of the passenger seat, the air induction means being operable when the air inlet means is placed in air flow communication with the environment about the arm rest.

Advantageously the subject invention is used in combination with the invention disclosed in the referenced co-pending application to provide a yet further improved air filtration system.

This Sheet Has Been Replaced



THIS SHEET HAS BEEN REPLACED

This Sheet Has Been Replaced

CLAIMS

1. A combination of a passenger seat and air treatment means, said passenger seat being located in a pressurisable aircraft passenger cabin, said air treatment means comprising air inlet means in air-flow communication with the environment at and to the fore of said seat, air induction means, air filtration means and air outlet means, said induction means being operable to cause air flow from said environment via said inlet means, through said filtration means and to said outlet means.

2. The combination according to Claim 1, wherein said air inlet means is other than at said first mentioned seat.

3. A combination according to Claim 1 or 2, wherein said environment is bounded to the fore by the backrest of a second passenger seat and said air inlet means is at said backrest.

4. A combination according to Claim 1 or 2, wherein said environment is bounded to the fore by bulkhead means and said air inlet means is at said bulkhead means.

5. A combination according to any one of the preceding Claims, wherein said air induction means comprises an induction fan.

6. A combination according to any one of the preceding claims, wherein said filtration means comprises one

This Sheet Has Been Replaced ET HAS BEEN LACED

* C L M S *

or more of an electrostatic, polarised or passive air filtration means.

7. A combination according to any one of the preceding claims, wherein said air filtration means is provided by air filtration means of the cabin ventilation system.

8. A combination according to any one of the preceding claims, wherein said air induction means is provided by air induction means of the cabin ventilation system.

9. The combination according to any one of Claim 1 to 6, wherein said air inlet means, said air induction means, said air filtration means and said air outlet means are assembled together to form a unit.

10. An aircraft passenger seat in combination with air treatment means, said air treatment means comprising air inlet means, air induction means, air filtration means and air outlet means said air inlet means being at the rear of the seat and providing communication between the environment at the rear of said seat and said air induction means.

11. A seat according to Claim 10, wherein said air inlet means said air induction means, said air filtration means, and said air outlet means are assembled together to form a unit.

12. An aircraft comprising a passenger cabin, an aircraft passenger seat located within said cabin and air treatment means, said air treatment means comprising

THIS SHEET HAS BEEN REPLACED 12

* C L M S *

air inlet means in air-flow communication with the environment at and to the fore of said seat, air induction means, air filtration meahs and air outlet means, said induction means being operable to cause air flow from said environment via said inlet means, through said filtration means and to said outlet means.

13. The combination according to Claim 12, wherein said air inlet means is other than at said first mentioned seat.

This Sheet Has Been Replaced

AMENDED CLAIMS

[received by the International Bureau on 27 November 1995 (27.11.95); original claims 1,3,4,9,11 and 13 amended; original claim 2 cancelled; original claims 3-13 renumbered as 2-12 (3 pages)]

1. A combination of a passenger seat and air treatment means, said passenger seat being located in a pressurisable aircraft passenger cabin, said air treatment means comprising air inlet means in air-flow communication with the environment at and to the fore of said seat, said air inlet means being other than at said seat, air induction means, air filtration means and air outlet means, said induction means being operable to cause air flow from said environment via said inlet means, through said filtration means and to said outlet means.

2. A combination according to Claim 1, wherein said environment is bounded to the fore by the backrest of a second passenger seat and said air inlet means is at said backrest.

3. A combination according to Claim 1, wherein said environment is bounded to the fore by bulkhead means and said air inlet means is at said bulkhead means.

4. A combination according to any one of the preceding Claims, wherein said air induction means comprises an induction fan.

5. A combination according to any one of the preceding claims, wherein said filtration means comprises one or more of an electrostatic, polarised or passive air filtration means.

REPLACEMENT SHEET
27 NOV 1995

This Sheet Has Been Replaced

THIS SHEET HAS BEEN

6. A combination according to any one of the preceding claims, wherein said air filtration means is provided by air filtration means of the cabin ventilation system.

7. A combination according to any one of the preceding claims, wherein said air induction means is provided by air induction means of the cabin ventilation system.

8. The combination according to any one of Claim 1 to 5, wherein said air inlet means, said air induction means, said air filtration means and said air outlet means are assembled together to form a unit.

9. An aircraft passenger seat in combination with air treatment means, said air treatment means comprising air inlet means, air induction means, air filtration means and air outlet means said air inlet means being at the rear of the seat and providing communication between the environment at the rear of said seat and said air induction means.

10. A seat according to Claim 9, wherein said air inlet means said air induction means, said air filtration means, and said air outlet means are assembled together to form a unit.

11. An aircraft comprising a passenger cabin, an aircraft passenger seat located within said cabin and air treatment means, said air treatment means comprising air inlet means in air-flow communication with the environment at and to the fore of said seat, air

REPLACEMENT SHEET
27 NOV 1995

THIS SHEET HAS BEEN REPLACED

induction means, air filtration means and air outlet means, said induction means being operable to cause air flow from said environment via said inlet means, through said filtration means and to said outlet means.

12. The combination according to Claim 11, wherein said air inlet means is other than at said first mentioned seat.

REPLACEMENT SHEET
27 NOV 1995

This Sheet Has Been Replaced

Fig.1.

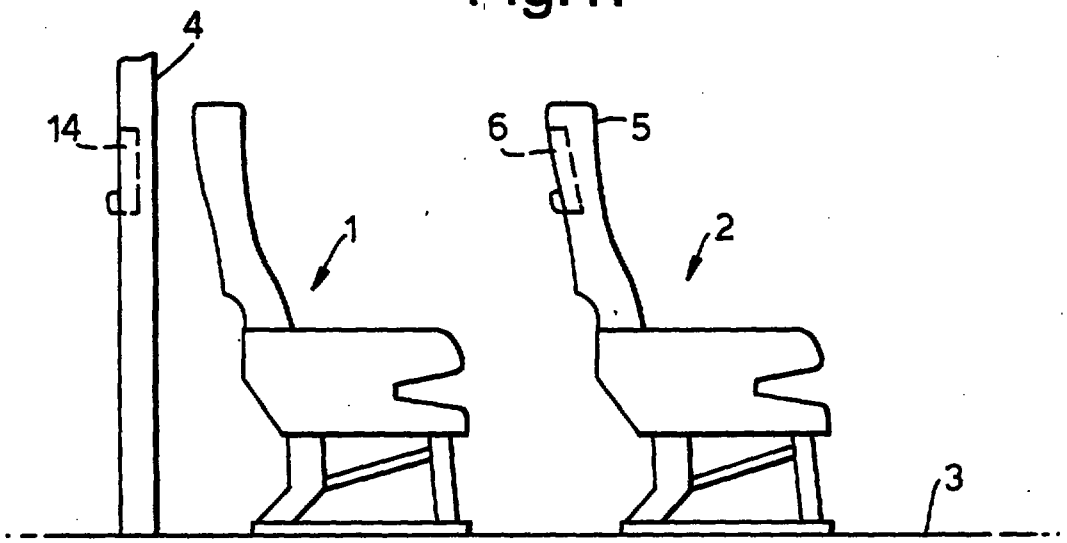
4
14
6
5
1
2
3

Fig.4.

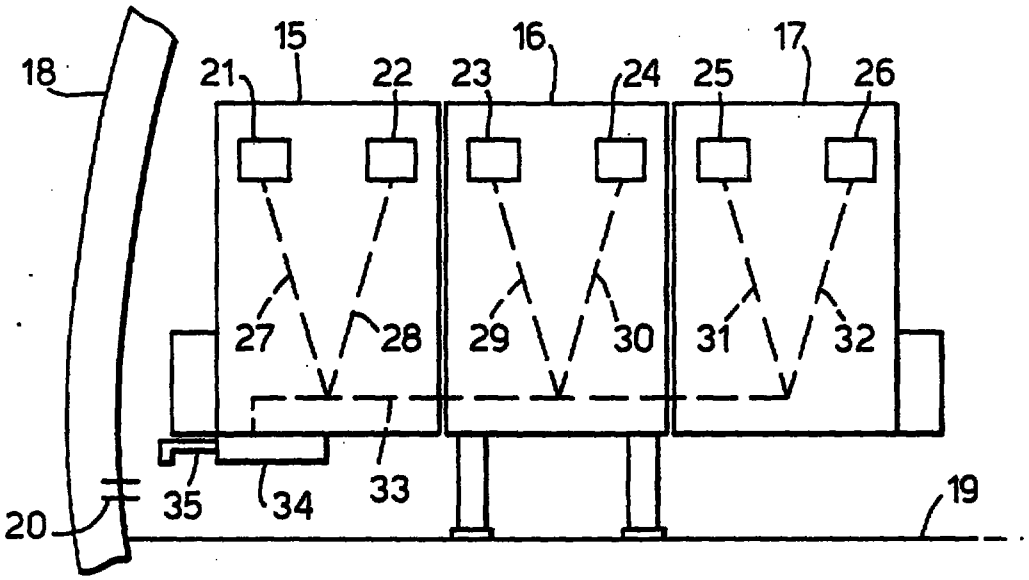
18
15
16
17
21
22
23
24
25
26
27
28
29
30
31
32
35
34
33
20
19

Fig.3.

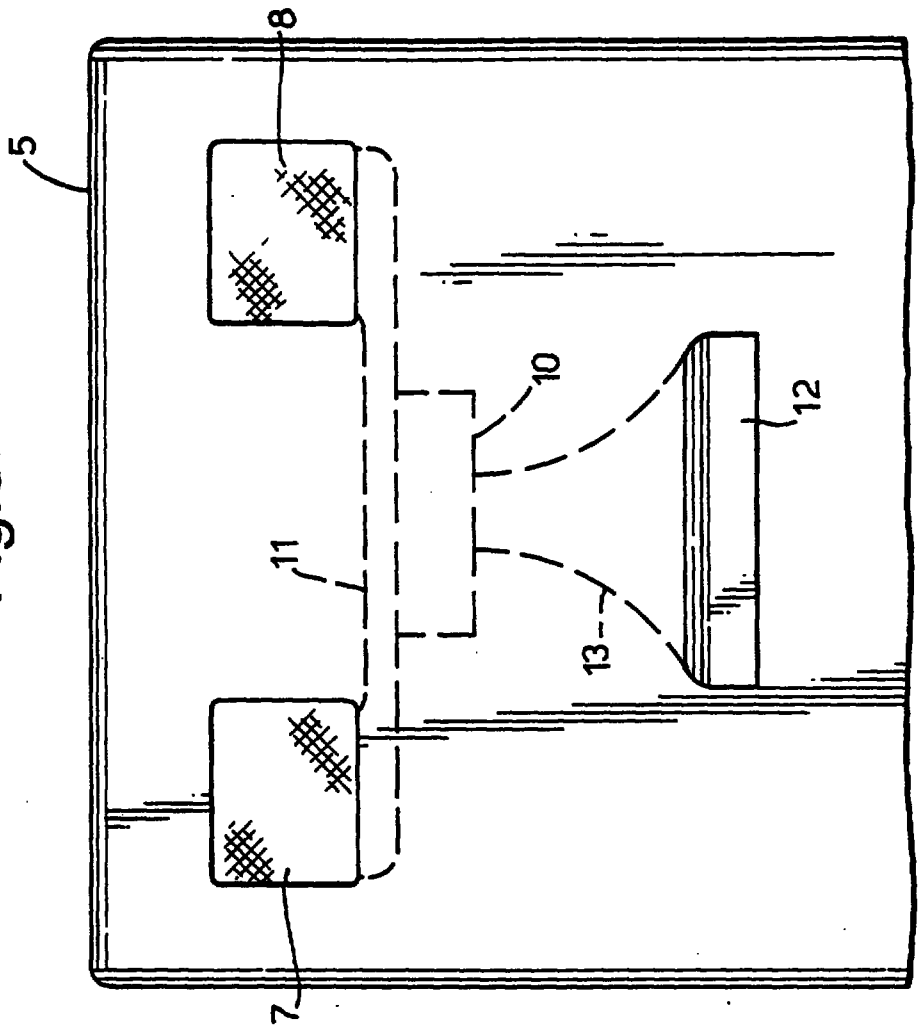

Fig.2.

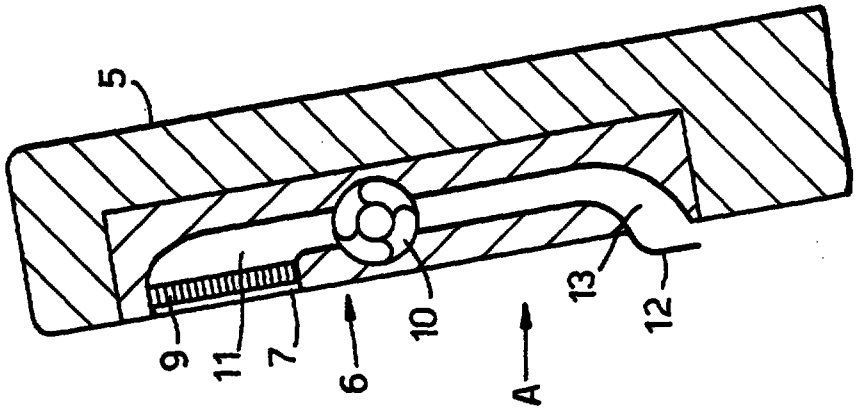

REPLACEMENT SHEET
15 JUL 1996

passenger aircraft can be considerable. Even in the case of smaller passenger aircraft it is an operational requisite to minimise the power requirement of the cabin ventilation system.

There is disclosed in U.S. 5,261,855 the provision in relation to an aircraft passenger cabin of a system for the capture of cigarette smoke laden air at the locations of the generation of the smoke and the passing thereof to the exterior of the aircraft.

An object of the subject invention is the provision of an improved passenger cabin air quality. It is a further object of the subject invention to provide improved means of maintaining an acceptable air quality in a passenger cabin.

The subject invention provides in an aircraft the combination of a passenger seat, air treatment means and bounding means, said passenger seat being located in a pressurisable passenger cabin of said aircraft and said bounding means bounding the environment at and to the fore of said seat, said air treatment means comprising air inlet means at said bounding means in air-flow communication with said environment, air induction means, air filtration means and air outlet means, and said induction means being operable to cause air flow from said environment via said inlet means, through said filtration means and to said outlet means.

The bounding means can take the form of the backrest of a second passenger seat, or can take the form of

AMENDED SHEET

REPLACEMENT SHEET
15 JUL 1996

bulkhead or partition means. In the case where the passenger seat is adjacent the outer wall of the pressurisable aircraft passenger cabin, the bounding means can take the form of a portion of the aircraft fuselage wall, in which case the air inlet may be at the outer wall of the cabin. Thus air can be drawn directly from the said environment by the air treatment means, rather than passing from said environment to another location in the cabin before being withdrawn from the cabin.

The air filtration means may be, for example, electrostatic, polarised or passive air filtration means.

A convenient arrangement is for the air inlet means, the air induction means, the air filtration means and the air outlet means to be assembled together as a single air treatment unit. Such unitary assemblage is advantageously mounted at, and preferably in, the said backrest or bulkhead means with the air inlet means opening at the rear of the backrest or bulkhead means in the usual case in which the first mentioned seat is to the rear of the second seat or the bulkhead means. Suitably, the air inlet means comprises grill means, which grill means is flush or substantially flush with the rear face of the backrest or bulkhead means.

The subject invention further provides an aircraft passenger seat in combination with air treatment means, said air treatment means comprising air inlet means, air induction means, air filtration means and air outlet means, said air inlet means being at the rear of said seat

AMENDED SHEET

REPLACEMENT SHEET
15 JUL 1996

and providing communication between the environment at the rear of said seat and said air induction means.

The air outlet means of the air treatment means may be located relatively of cabin air withdrawal means of the cabin ventilation system such that air issuing from the outlet means is drawn from the cabin via the withdrawal means.

Air filtration means of the air treatment means may be provided by air filtration means of the cabin ventilation system.

Air induction means of the air treatment means may be provided by air induction means of the cabin ventilation system.

In order that the subject invention may be clearly understood and readily carried into effect, reference will now be made, by way of example, to the diagrammatic drawings hereof, in which:-

Figure 1 shows two aircraft passenger seats installed in a passenger cabin of an aircraft, an aeroplane for example;

Figure 2 shows, in section and to an enlarged scale, an upper portion of the backrest of the rightward of the seats shown in Figure 1;

Figure 3 shows the upper portion of the backrest of Figure 2 as viewed in the direction of arrow A of Figure 2; and

Figure 4 shows a rearward view of a row of three aircraft passenger seats.

AMENDED SHEET

REPLACEMENT SHEET
15 JUL 1996

In Figure 1 the first and second aircraft passenger seats are designated by reference numerals 1 and 2. The seats 1 and 2 are secured to aircraft cabin floor 3, with seat 1 being positioned directly behind seat 2. Reference numeral 4 designates a cabin bulkhead or partition.

Mounted in the backrest 5 of seat 2 is an air treatment unit 6. The unit 6 comprises two air inlet grills 7 and 8 (see Figure 3), mesh grills for example, behind each of which is located an electrostatic filter, the filter associated with inlet grill 7 being designated by reference numeral 9 in Figure 2. The unit 6 also comprises air induction means, taking the form of an induction fan 10, a first duct 11, extending from the aforementioned filters to the air inlet side of the fan 10, an air outlet baffle 12 and a second duct 13 which extends from the air outlet side of the fan 10 to the baffle 12. The unit 6 further comprises an electric motor (not shown) arranged to drive the fan 10.

Wiring (not shown) runs within the backrest 5 for the provision of an electrical supply to the aforesaid motor and to the grids (not shown) of the aforesaid electrostatic filters.

When the fan 10 is in operation, air from the environment at the rear of the backrest 5, i.e. to the fore of seat 1, is drawn continuously through the grills 7,8 and the electrostatic filters associated therewith and is expelled *via* the duct 13, the presence of the baffle 12 causing the expelled air to flow in a downward direction.

AMENDED SHEET

REPLACEMENT SHEET
15 JUL 1996

Thus, should a passenger in seat 1 be smoking a cigarette, tobacco smoke is drawn into the unit 6 with the continuous airflow therethrough, whereupon tobacco smoke components are trapped on the aforesaid electrostatic filters.

The backrest of each cabin seat behind which is positioned a smoking designated seat accommodates an air treatment unit as per unit 6, together with the associated electrical wiring.

Should a smoking designated seat be positioned immediately to the rear of a cabin bulkhead or partition, an air treatment unit as per unit 6 is mounted of the bulkhead. Such a unit, designated by reference numeral 14, is shown mounted in bulkhead 4 (Figure 1).

By use of the backrest or bulkhead mounted air treatment units, when a person smoking a cigarette is seated in a smoking designated seat, tobacco smoke is removed directly from the location of the generation thereof. Absent the use of such air treatment units, the whole tobacco smoke is moved within the cabin from said location by the air circulating under the action of the cabin ventilation system. The units provide the further advantage of reducing the load on the cabin ventilation system.

If a stowable table is mounted at the rear of seat 2, the location of the baffle 12 should preferably be no higher than the position occupied by the table when folded out for use. Similarly, if a stowable table is provided for a seat positioned behind (to the left viewing Figure

AMENDED SHEE

REPLACEMENT SHEET
15 JUL 1996

1) the bulkhead 4, the air outlet baffle of the air treatment unit 14 should preferably be no higher than the position occupied by the table when folded out or fitted for use.

The aircraft passenger seats shown in Figure 4 are designated by reference numerals 15, 16 and 17. Reference numerals 18 and 19 designate respectively the aircraft fuselage wall and the cabin floor. Reference numeral 20 designates a cabin air withdrawal grill of the cabin ventilation system. Air introduction means (not shown) of the cabin ventilation system are located at upper locations of the cabin. Two air inlet grills are mounted at the rear of each of the backrests of the seats 15-17, which grills are designated by reference numerals 21, 22; 23,24; and 25,26. An air-flow duct extends downwardly, within the respective backrest, from each of the grills 21-26, these air-flow ducts being designated by reference numerals 27, 28; 29,30; and 31,32. At the lower ends thereof the ducts 27-32 communicate with a common air-flow duct 33, which duct 33, extends to the air inlet side of an induction fan unit 34, which unit 34 provides air induction means. From the air outlet side of the fan unit 34 there extends an air-flow duct 35, the distal end of which duct 35 is downwardly directed towards the cabin air withdrawal grill 20.

With the fan unit 34 in operation air is drawn continuously through the air inlet grills 21-26, whereby should a passenger in a seat immediately behind one of the

AMENDED SHEET

REPLACEMENT SHEET
15 JUL 1996

seats 15-17 be smoking a cigarette, tobacco smoke too is drawn through the air inlet grills of the backrest of said one of the seats. The smoke laden air is expelled by the fan unit 34 via the air-flow duct 35, and is thereupon drawn from the cabin via the grill 20.

A filter may be installed in duct 35 or in duct 33 downstream of the juncture of ducts 27,28 with duct 33. Alternatively, a large filtration unit, located, for example, beneath cabin floor 19, may serve to filter smoke laden air drawn from all of the air inlet grills mounted at the rear of the backrests of a plurality of rows of seats. In this alternative case, instead of a fan unit as per unit 34 being associated with each row of seats, a large air induction unit, located, for example, below the cabin floor 19 may be utilised to draw air through all of said air inlet grills and through the said large filtration unit.

The said large filtration unit may be that of an air conditioning pack of the cabin ventilation system.

If an aforesaid large filtration unit is utilised, the ducting serving to convey air thereto may be separate from ducting of the cabin ventilation system.

As will be realised by the skilled-in-the-art addressee, should a row of seats as per seats 15-17 of Figure 4 be positioned to the rear of a cabin bulkhead, air treatment elements generally similar to those depicted in Figure 4 would be associated with the bulkhead, whereby should a passenger in one of the seats be smoking a

AMENDED SHEET

cigarette, tobacco smoke would be drawn through air inlet grills at the bulkhead, which smoke would be withdrawn from the cabin via withdrawal grill means as per grill 20 of the cabin ventilation system.

If a passenger seat comprises a headrest, an air treatment unit as per unit 6 or air inlet grills as per 21-26 could be installed at the headrest. Thus references herein to "backrest" encompass "headrest".

As described and shown hereinabove, two air inlet grills are located at the rear of a backrest. As will be realised by the skilled-in-the-art addressee, as an alternative a single air inlet grill could be employed, suitably a horizontally disposed grill of elongate conformation.

REPLACEMENT SHEET
15 JUL 1996

AMENDED SHEET

REPLACEMENT SHEET
15 JUL 1996

CLAIMS

* C L M S *

1. In an aircraft the combination of a passenger seat (1) air treatment means (6) and bounding means (4,5), said passenger seat (1) being located in a pressurisable passenger cabin of said aircraft and said bounding means (4, 5) bounding the environment at and to the fore of said seat (1), said air treatment means (6) comprising air inlet means (7,8:21,22:23,24:25,26) at said bounding means (4,5) in air-flow communication with said environment, air induction means (10,34), air filtration means (9) and air outlet means (13,35), and said induction means (10,34) being operable to cause air flow from said environment via said inlet means (7,8:21,22:23,24:25,26), through said filtration means (9) and to said outlet means (13,35).
2. A combination according to Claim 1, wherein said bounding means is the backrest (5) of a second passenger seat (2) and said air inlet means (7,8) is at said backrest (5).
3. A combination according to Claim 1, wherein said bounding means is bulkhead means (4) and said air inlet means is at said bulkhead means (4).
4. A combination according to Claim 1, 2 or 3, wherein said air induction means (10,34) comprises an induction fan.

This Sheet Has Been Replaced

AMENDED SHEET

REPLACEMENT SHEET
15 JUL 1996

* C L M S *

5. A combination according to any one of the preceding claims, wherein said filtration means comprises one or more of an electrostatic, polarised or passive air filtration means.

6. A combination according to any one of the preceding claims, wherein said air filtration means is provided by air filtration means of the cabin ventilation system.

7. A combination according to any one of the preceding claims, wherein said air induction means is provided by air induction means of the cabin ventilation system.

8. The combination according to any one of Claim 1 to 5, wherein said air inlet means (7,8), said air induction means (10), said air filtration means (9) and said air outlet means (13) are assembled together to form a unit.

9. An aircraft passenger seat (2,15) in combination with air treatment means (6), said air treatment means (6) comprising air inlet means (7,8:21,22), air induction means (10,34), air filtration means (9) and air outlet means (13,35), said air inlet means (7,8:21,22) being at the rear of said seat (2,15) and providing communication between the environment at the rear of said seat (2,15) and said air induction means (10,34).

is Sheet Has Been Repla

10. A seat according to Claim 9, wherein said air inlet means (7,8) said air induction means (10), said air

AMENDED SHEET

* C L M S *

filtration means (9) and said air outlet means (13) are assembled together to form a unit (6).

REPLACEMENT SHEET
15 JUL 1996

This Sheet Has Been Replaced

AMENDED SHEET

REPLACEMENT SHEET
Date : 19 FEB 1998

CLAIMS



1. A method of treating air of a pressurised passenger cabin of an aircraft, said cabin comprising a passenger seat (1), air treatment means (6) and bounding means (4,5), said bounding means (4,5) bounding the environment at and to the fore of said seat(1) and air inlet means (7,8,21,22; 23,24; 25,26) of said air treatment means (6) being located at said bounding means (4,5), wherein induction means (10,34) of said air treatment means (6) draws air from said environment such that tobacco smoke generated in said environment is removed directly from said environment thus to prevent said smoke being moved from said environment to another location in said cabin, characterised in that, said air drawn from said enviornment passes through filtration means (9) of said air treatment means (6), which filtration means (9) removes tobacco smoke components from said air, air thus filtered being returned to said cabin.

2. In an aircraft the combination of a passenger seat (1), air treatment means (6) and bounding means (4,5), said passenger seat (1) being located in a pressurisable passenger cabin of said aircraft and said bounding means (4, 5) bounding the environment at and to the fore of said seat (1), said air treatment means (6) comprising air inlet means (7,8,21,22;23,24;25,26) at said bounding means (4,5)

REPLACEMENT SHEET
Date: 19 Feb 1998

in air-flow communication with said environment, air induction means (10,34), and air outlet means (13,35), said induction means (10,34) being operable to draw air from said environment via said inlet means (7,8,21,22; 23,24; 25,26), such that tobacco smoke generated in said environment is removed directly from said enviornment thus to prevent said smoke being moved from said environment to another location in said cabin, characterised in that said air treatment means (6) further comprises air filtration means (9), which air filtration means (9) is capable of removing tobacco smoke components from air drawn through said air treatment means (6) and air thus filtered is returned to said cabin.

3. A combination according to Claim 2, wherein said bounding means is the backrest (5) of a second passenger seat (2) and said air inlet means (7,8) is at said backrest (5).

4. A combination according to Claim 2, wherein said bounding means is bulkhead means (4) and said air inlet means is at said bulkhead means (4).

5. A combination according to Claim 2, 3 or 4, wherein said air induction means (10,34) comprises an induction fan.

6. A combination according to any one of Claims 2-5, wherein said filtration means comprises one or more of an electrostatic, polarised or passive air filtration means.

REPLACEMENT SHEET
Date : 19 FEB 1998

7. A combination according to Claims 2-6, wherein said air filtration means is provided by air filtration means of the cabin ventilation system.

8. A combination according to Claims 2-7, wherein said air induction means is provided by air induction means of the cabin ventilation system.

9. The combination according to any one of Claims 2 to 6, wherein said air inlet means (7,8), said air induction means (10), said air filtration means (9) and said air outlet means (13) are assembled together to form a unit.

10. An aircraft passenger seat (2, 15) in combination with air treatment means (6), said air treatment means (6) comprising air inlet means (7,8; 21,22), air induction means (10,34) and air outlet means, said air inlet means (7,8; 21,22) being at the rear of said seat (2, 15) and providing communication between the environment at the rear of said seat (2, 15) and said air induction means (10, 34) said air induction means (10, 34) being operable to draw air from said environment via said inlet means (7,8; 21,22) such that tobacco smoke generated in said environment is removed directly from said environment thus to prevent said smoke being moved from said environment to another location in said cabin, characterised in that said air treatment means (6) further comprises air filtration means (9), which air filtration means (9) is capable of removing tobacco

REPLACEMENT SHEET
Date 19 FEB 1998

* C L M S *

smoke components from air drawn through said air treatment means (6) and in operation of said air treatment means (6), air thus filtered is returned to said cabin.

11. A seat according to Claim 10, wherein said air inlet means (7,8) said air induction means (10), said air filtration means (9) and said air outlet means (13) are assembled together to form a unit (6).

SG 9700939-3

PCT

WORLD INTELLECTUAL PROPERTY ORGANIZATION
International Bureau

INTERNATIONAL APPLICATION PUBLISHED UNDER THE PATENT COOPERATION TREATY (PCT)

(51) International Patent Classification 6: B64D 11/00, 11/06, B60N 2/44, B60H 1/34 — A1

(11) International Publication Number: WO 96/09205

(43) International Publication Date: 28 March 1996 (28.03.96)

(21) International Application Number: PCT/GB95/02215

(22) International Filing Date: 20 September 1995 (20.09.95)

(30) Priority Data:
9419096.4 — 22 September 1994 (22.09.94) — GB
9424467.0 — 3 December 1994 (03.12.94) — GB

(71) Applicant (*for all designated States except US*): BRITISH-AMERICAN TOBACCO COMPANY LIMITED [GB/GB]; Millbank, Knowle Green, Staines, Middlesex TW18 1DY (GB).

(72) Inventor; and

(75) Inventor/Applicant (*for US only*): WARREN, Nigel, David [GB/GB]; 1 Hann Road, Rownhams, Southampton SO16 8LN (GB).

(74) Agents: MACLEAN, Kenneth, John, Hamson et al.; British-American Tobacco Company Limited, Technology Centre, Regents Park Road, Southampton SO15 8TL (GB).

(81) Designated States: AM, AT, AU, BB, BG, BR, BY, CA, CH, CN, CZ, DE, DK, EE, ES, FI, GB, GE, HU, IS, JP, KE, KG, KP, KR, KZ, LK, LR, LT, LU, LV, MD, MG, MK, MN, MW, MX, NO, NZ, PL, PT, RO, RU, SD, SE, SG, SI, SK, TJ, TM, TT, UA, UG, US, UZ, VN, European patent (AT, BE, CH, DE, DK, ES, FR, GB, GR, IE, IT, LU, MC, NL, PT, SE), OAPI patent (BF, BJ, CF, CG, CI, CM, GA, GN, ML, MR, NE, SN, TD, TG), ARIPO patent (KE, MW, SD, SZ, UG).

Published

With international search report.

With amended claims.

RTMP copy + IPER + Annexes

(54) Title: AIR TREATMENT

(57) Abstract

A passenger seat in a pressurisable aircraft cabin, in combination with air treatment means (6). The air treatment means is operable to take smoke laden air from the environment immediately at and to the fore of the seat, to process the air through air filtration means (9) and to pass the treated air back into the cabin. The air treatment means may, for example, be located as a unit in the backrest (5) of the seat or in bulkhead means of the cabin to the front of the seat.

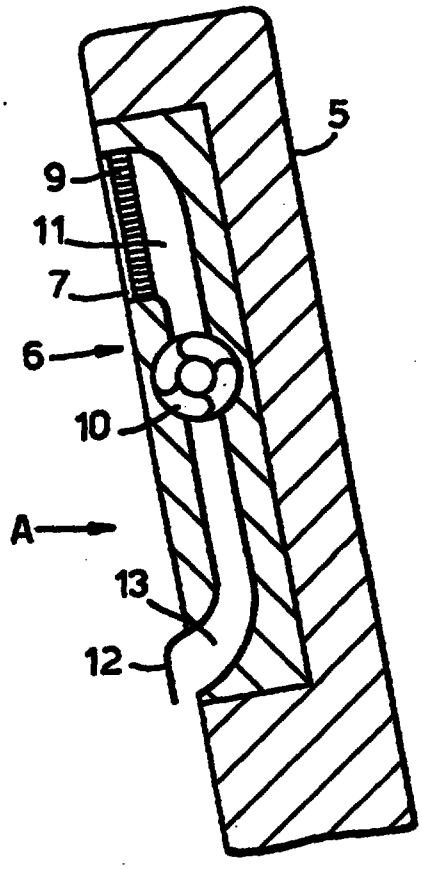

FOR THE PURPOSES OF INFORMATION ONLY

Codes used to identify States party to the PCT on the front pages of pamphlets publishing international applications under the PCT.

AT	Austria	GB	United Kingdom	MR	Mauritania
AU	Australia	GE	Georgia	MW	Malawi
BB	Barbados	GN	Guinea	NE	Niger
BE	Belgium	GR	Greece	NL	Netherlands
BF	Burkina Faso	HU	Hungary	NO	Norway
BG	Bulgaria	IE	Ireland	NZ	New Zealand
BJ	Benin	IT	Italy	PL	Poland
BR	Brazil	JP	Japan	PT	Portugal
BY	Belarus	KE	Kenya	RO	Romania
CA	Canada	KG	Kyrgystan	RU	Russian Federation
CF	Central African Republic	KP	Democratic People's Republic of Korea	SD	Sudan
CG	Congo			SE	Sweden
CH	Switzerland	KR	Republic of Korea	SI	Slovenia
CI	Côte d'Ivoire	KZ	Kazakhstan	SK	Slovakia
CM	Cameroon	LI	Liechtenstein	SN	Senegal
CN	China	LK	Sri Lanka	TD	Chad
CS	Czechoslovakia	LU	Luxembourg	TG	Togo
CZ	Czech Republic	LV	Latvia	TJ	Tajikistan
DE	Germany	MC	Monaco	TT	Trinidad and Tobago
DK	Denmark	MD	Republic of Moldova	UA	Ukraine
ES	Spain	MG	Madagascar	US	United States of America
FI	Finland	ML	Mali	UZ	Uzbekistan
FR	France	MN	Mongolia	VN	Viet Nam
GA	Gabon				

9700939-3