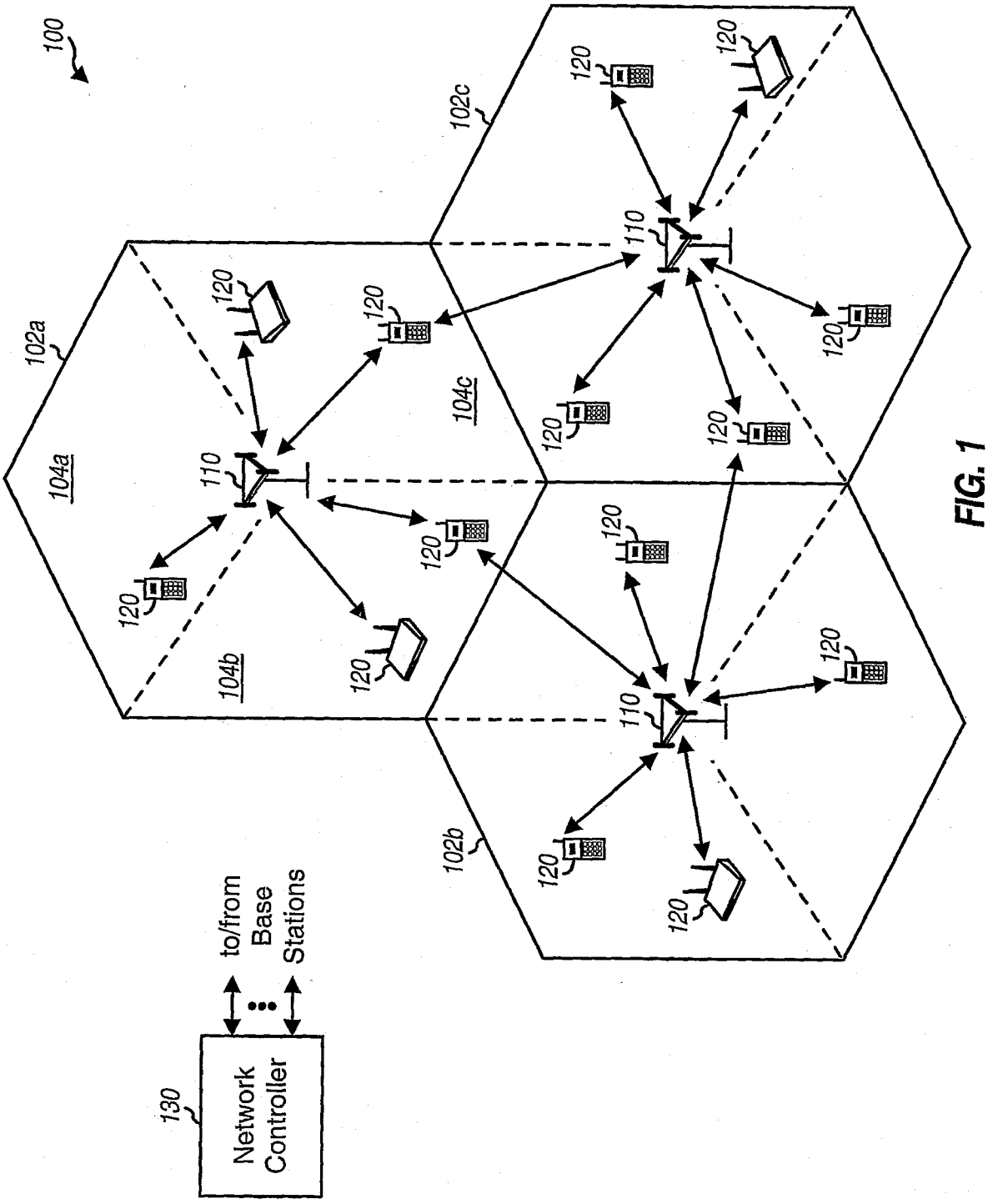
100
102a
102b
102c
104a
104b
104c
110
120
130
Network Controller
to/from Base Stations

FIG. 1

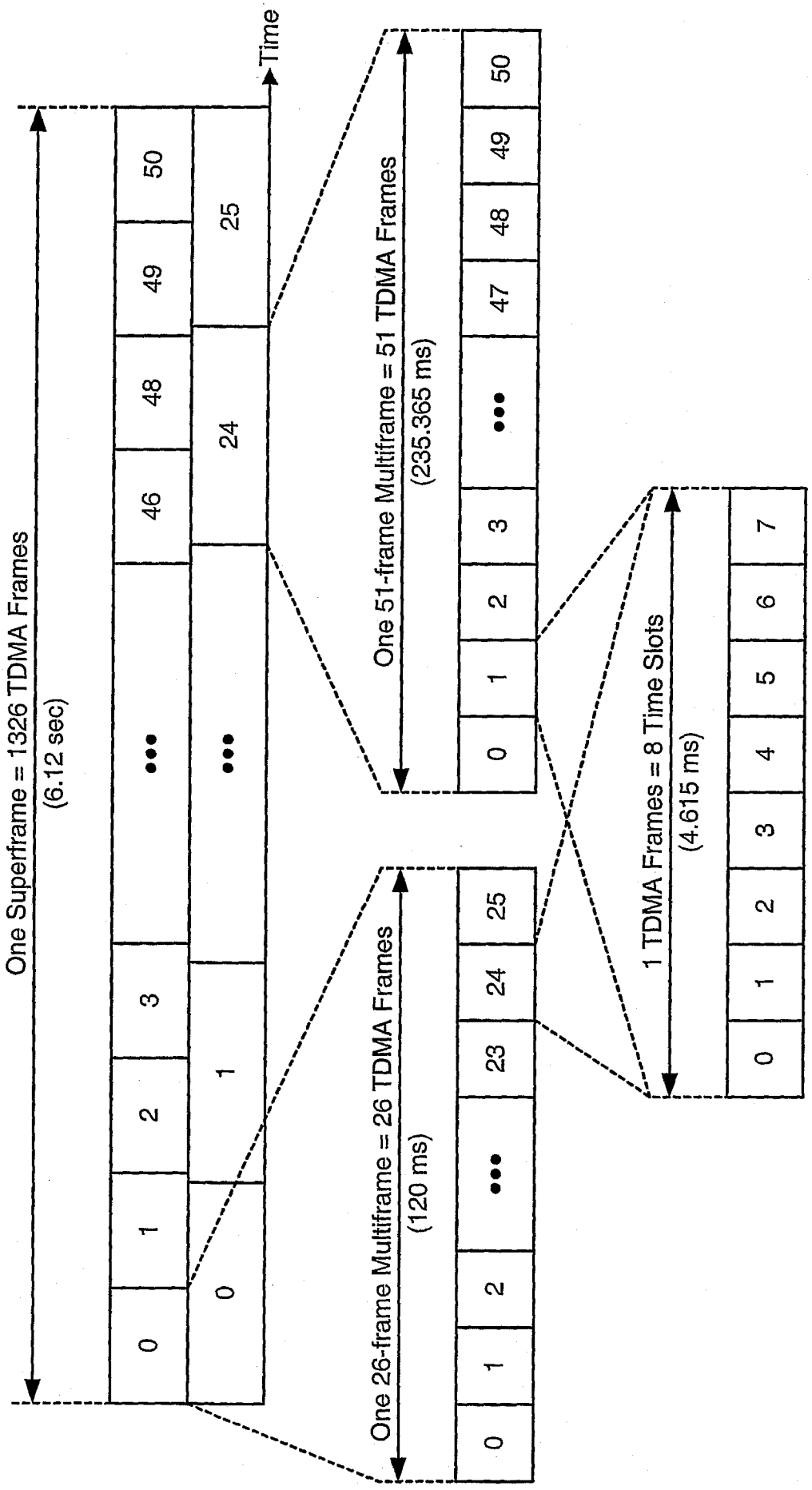
Time
One Superframe = 1326 TDMA Frames
(6.12 sec)
0
1
2
3
46
48
49
50
0
1
24
25
One 51-frame Multiframe = 51 TDMA Frames
(235.365 ms)
0
1
2
3
47
48
49
50
One 26-frame Multiframe = 26 TDMA Frames
(120 ms)
0
1
2
23
24
25
1 TDMA Frames = 8 Time Slots
(4.615 ms)
0
1
2
3
4
5
6
7

FIG. 2

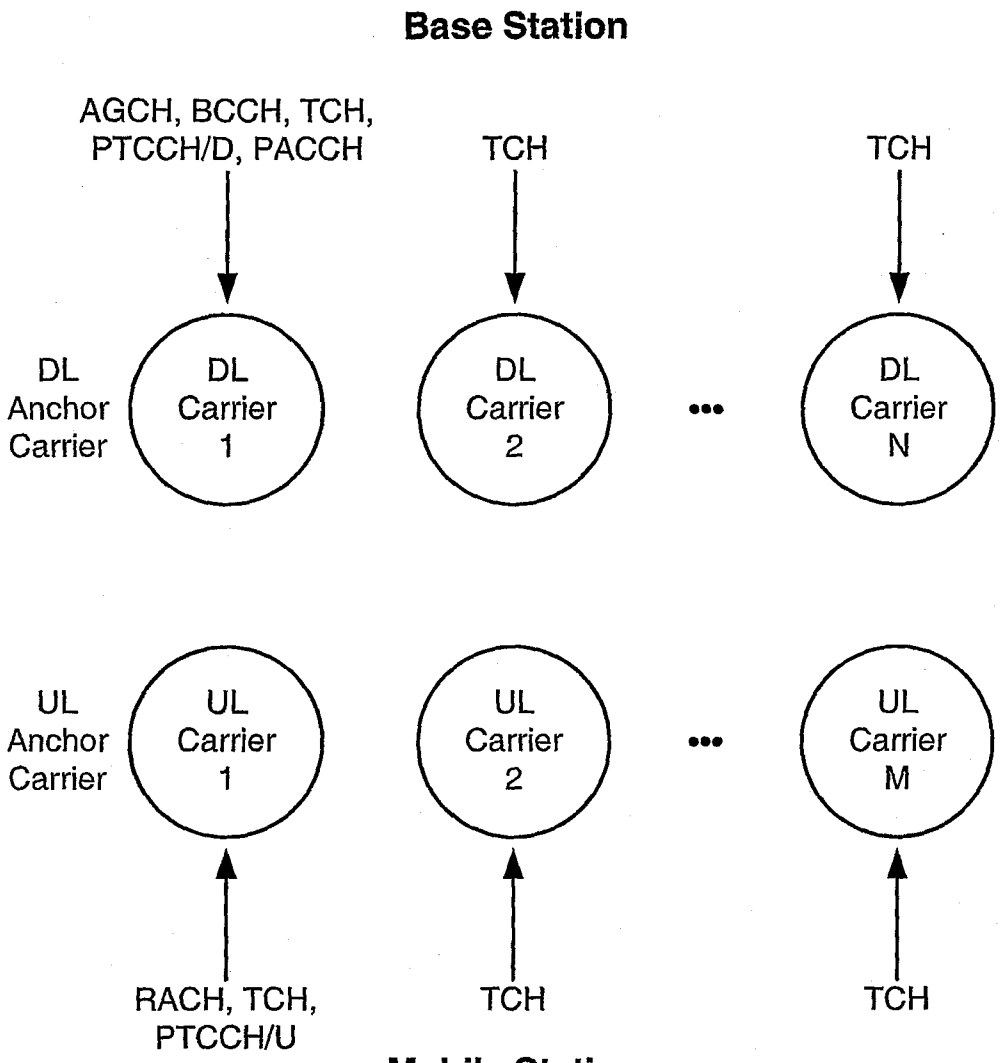
Base Station
AGCH, BCCH, TCH, PTCCH/D, PACCH
TCH
TCH
DL Anchor Carrier
DL Carrier 1
DL Carrier 2
DL Carrier N
UL Anchor Carrier
UL Carrier 1
UL Carrier 2
UL Carrier M
RACH, TCH, PTCCH/U
TCH
TCH
Mobile Station

FIG. 3

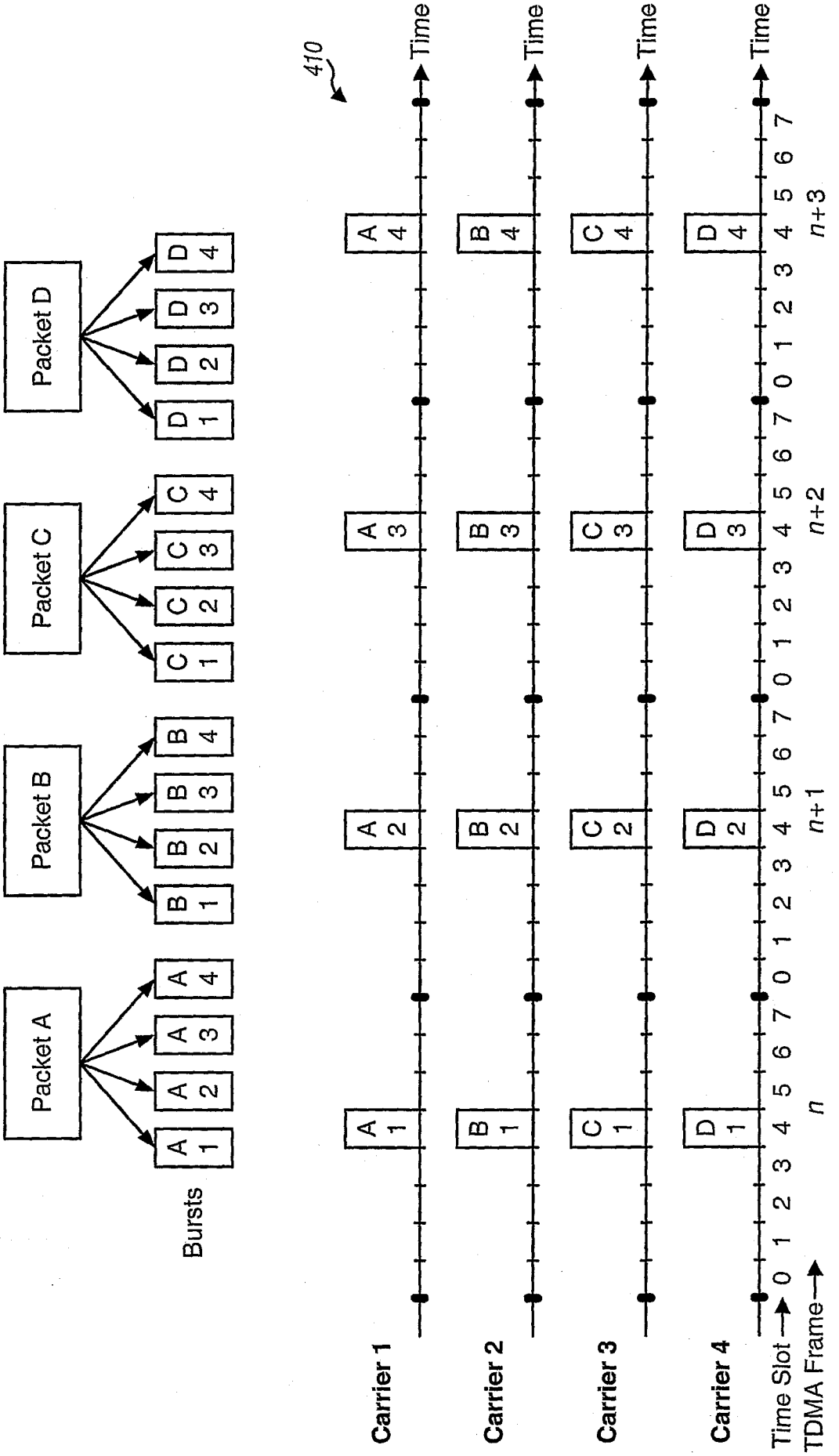
Packet A
Packet B
Packet C
Packet D
Bursts
410
Carrier 1
Carrier 2
Carrier 3
Carrier 4
Time
Time Slot
TDMA Frame
n
n+1
n+2
n+3

FIG. 4A

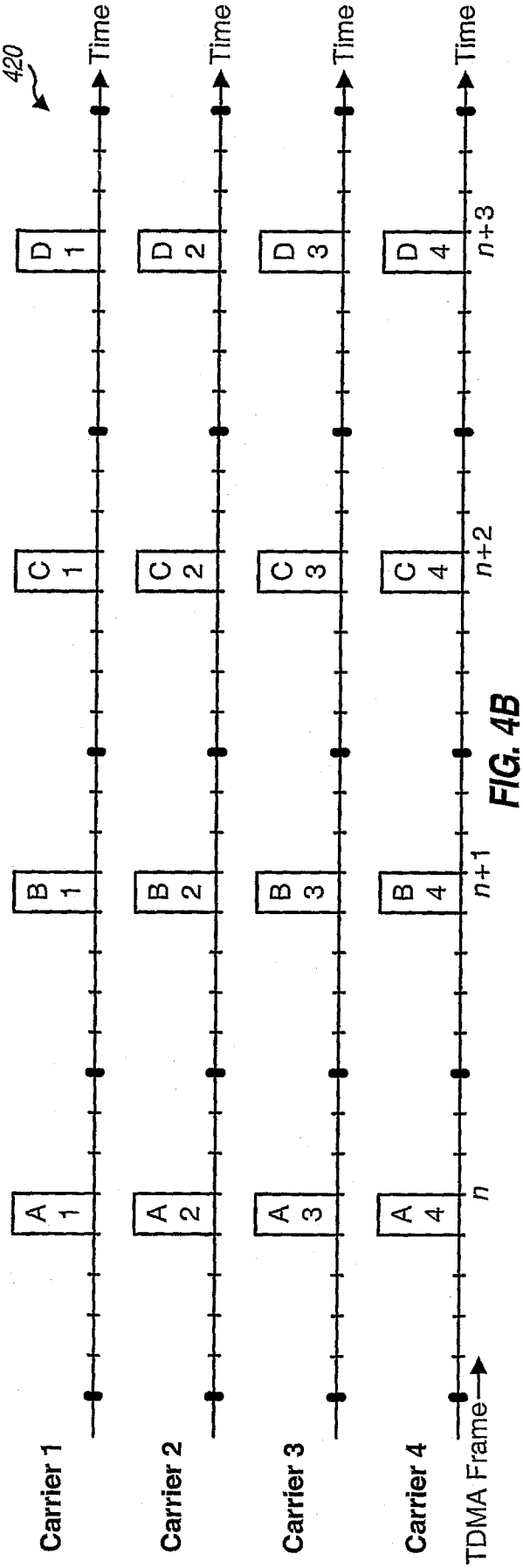
420
Carrier 1
Carrier 2
Carrier 3
Carrier 4
Time
TDMA Frame
A 1
B 1
C 1
D 1
A 2
B 2
C 2
D 2
A 3
B 3
C 3
D 3
A 4
B 4
C 4
D 4
n
n+1
n+2
n+3

FIG. 4B

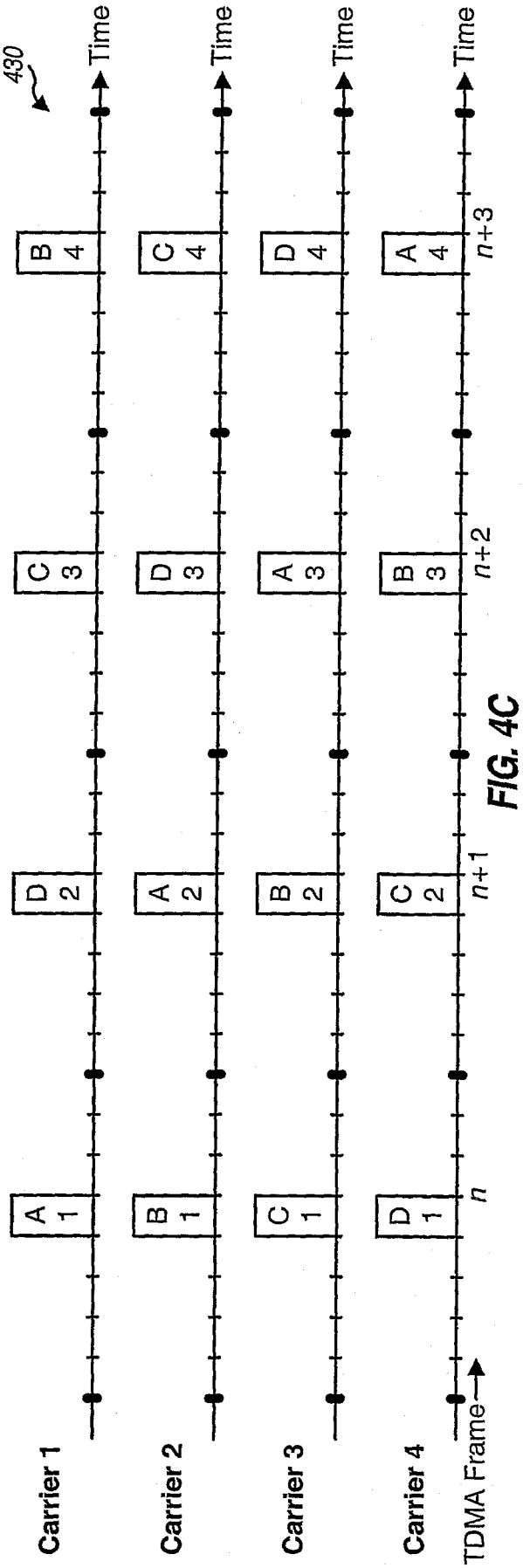
430
Carrier 1
Carrier 2
Carrier 3
Carrier 4
Time
TDMA Frame
A 1
D 2
C 3
B 4
B 1
A 2
D 3
C 4
C 1
B 2
A 3
D 4
D 1
C 2
B 3
A 4
n
n+1
n+2
n+3

FIG. 4C

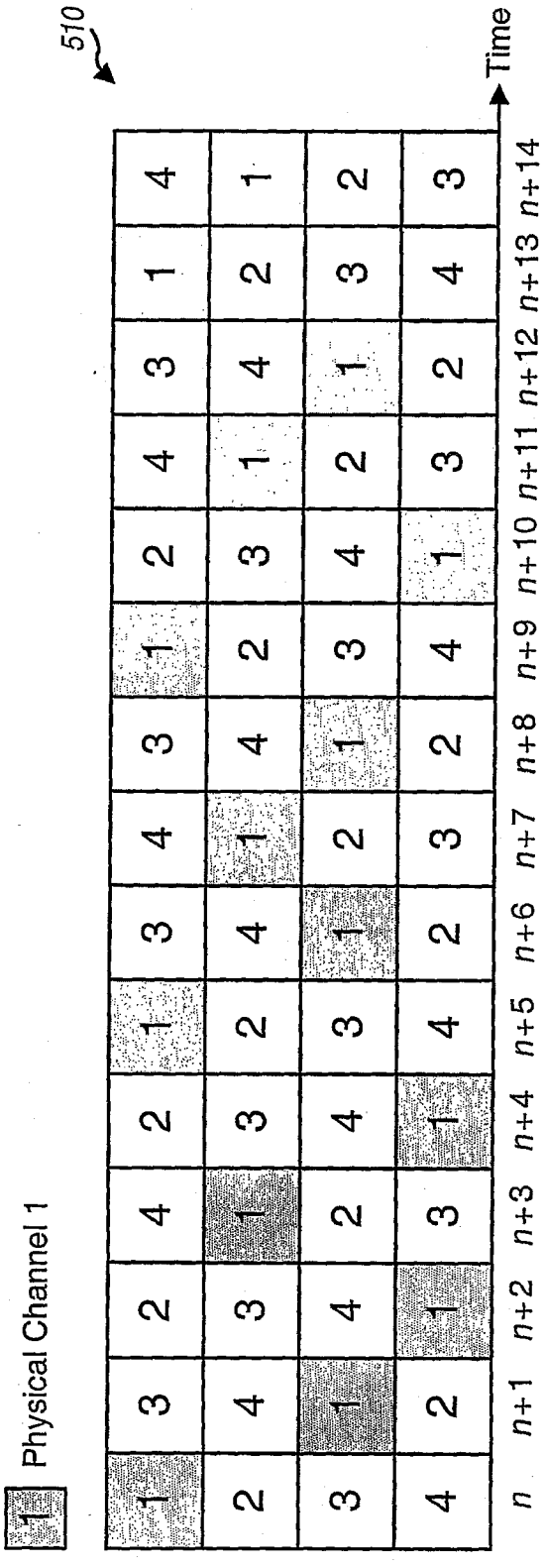
510
1 Physical Channel 1
Carrier 1
Carrier 2
Carrier 3
Carrier 4
n n+1 n+2 n+3 n+4 n+5 n+6 n+7 n+8 n+9 n+10 n+11 n+12 n+13 n+14
TDMA Frame
Time

FIG. 5A

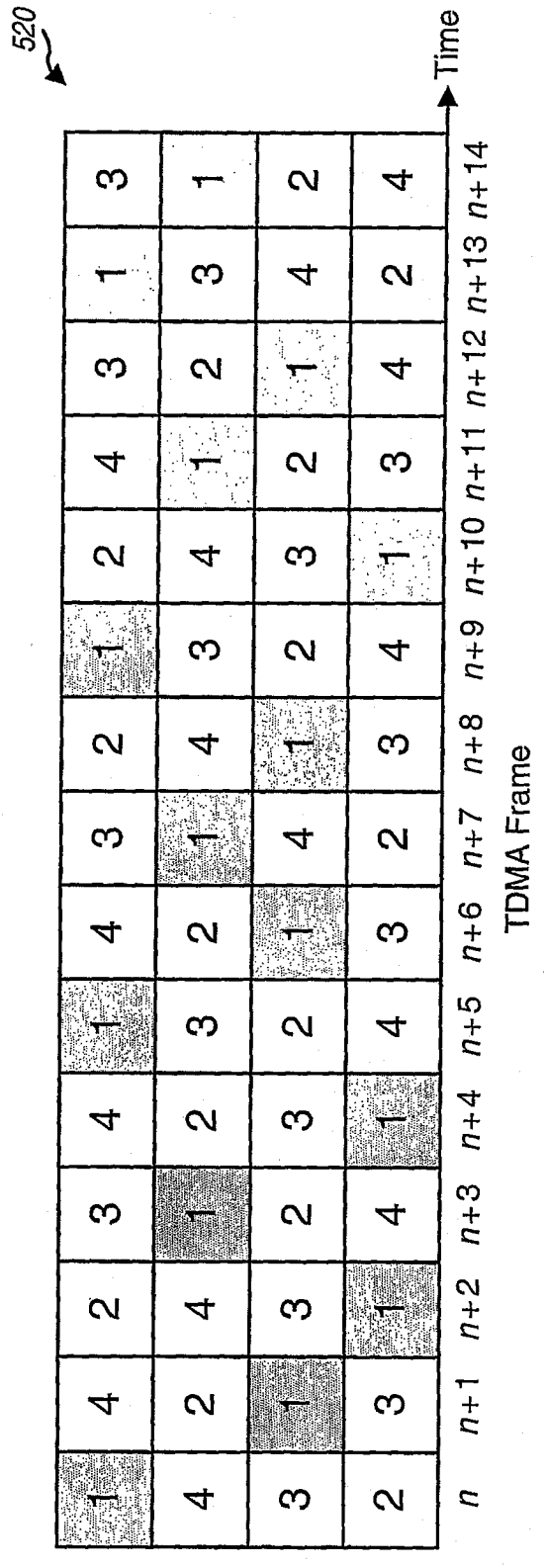
520
Carrier 1
Carrier 2
Carrier 3
Carrier 4
n n+1 n+2 n+3 n+4 n+5 n+6 n+7 n+8 n+9 n+10 n+11 n+12 n+13 n+14
TDMA Frame
Time

FIG. 5B

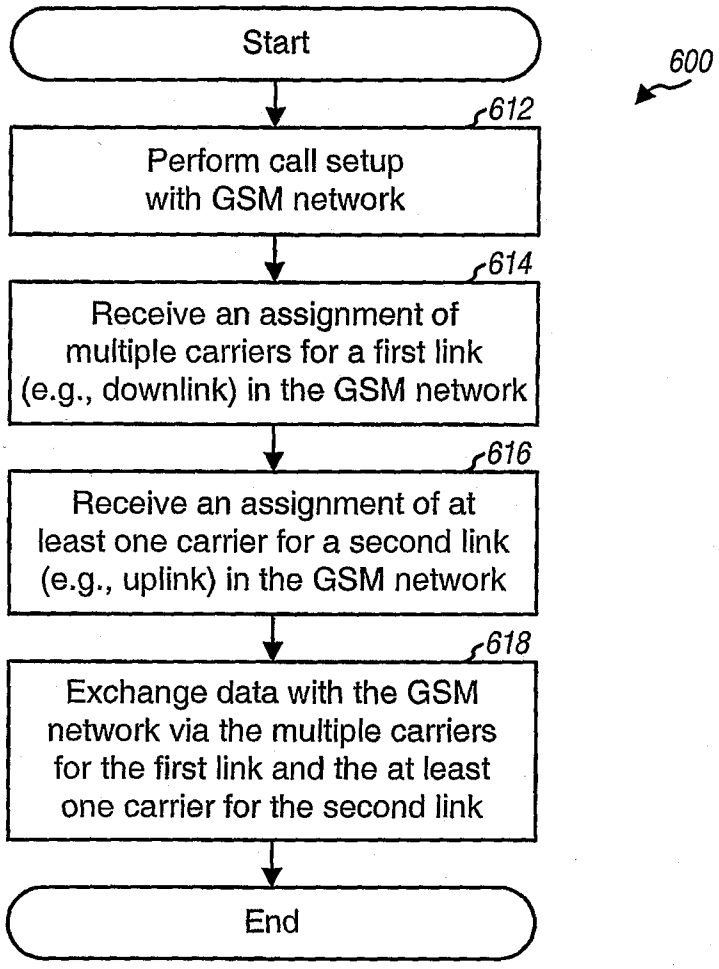
Start
600
612
Perform call setup with GSM network
614
Receive an assignment of multiple carriers for a first link (e.g., downlink) in the GSM network
616
Receive an assignment of at least one carrier for a second link (e.g., uplink) in the GSM network
618
Exchange data with the GSM network via the multiple carriers for the first link and the at least one carrier for the second link
End

FIG. 6

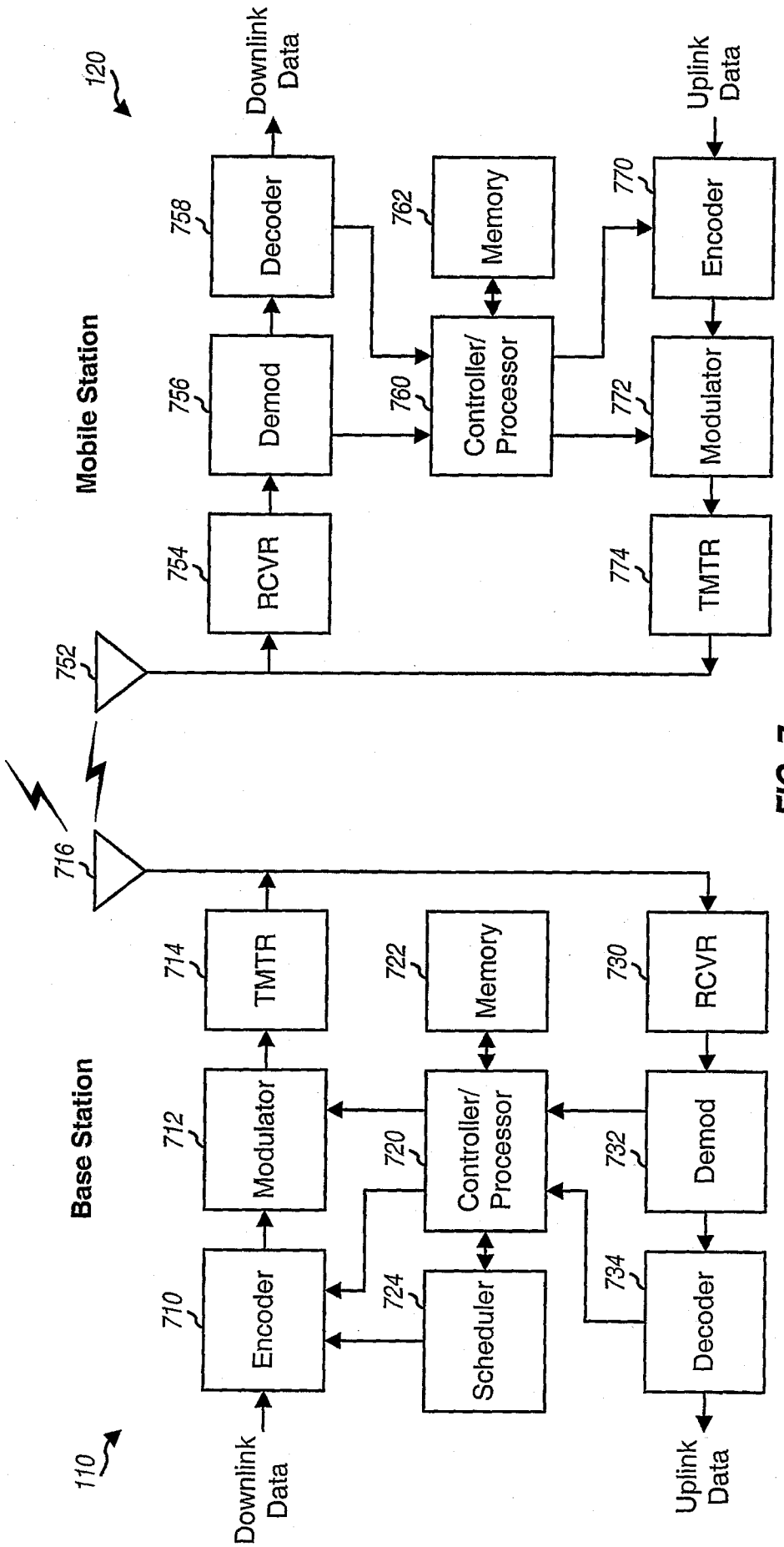
110
Base Station
Downlink Data
Encoder
710
Modulator
712
TMTR
714
716
Scheduler
724
Controller/ Processor
720
Memory
722
RCVR
730
Demod
732
Decoder
734
Uplink Data
120
Mobile Station
752
RCVR
754
Demod
756
Decoder
758
Controller/ Processor
760
Memory
762
TMTR
774
Modulator
772
Encoder
770
Downlink Data
Uplink Data

FIG. 7