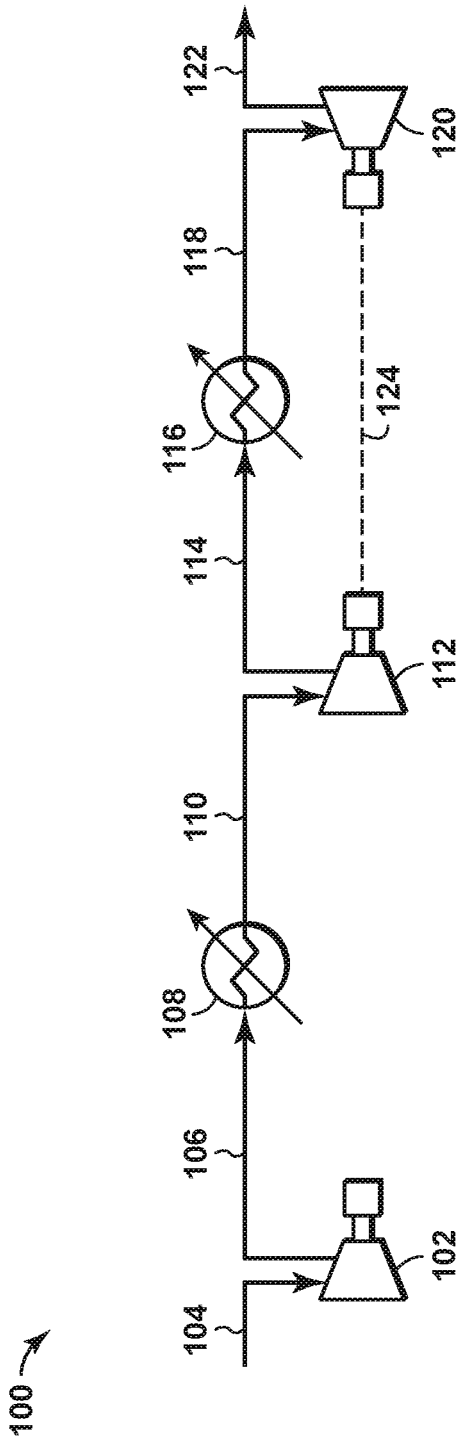


FIG. 1

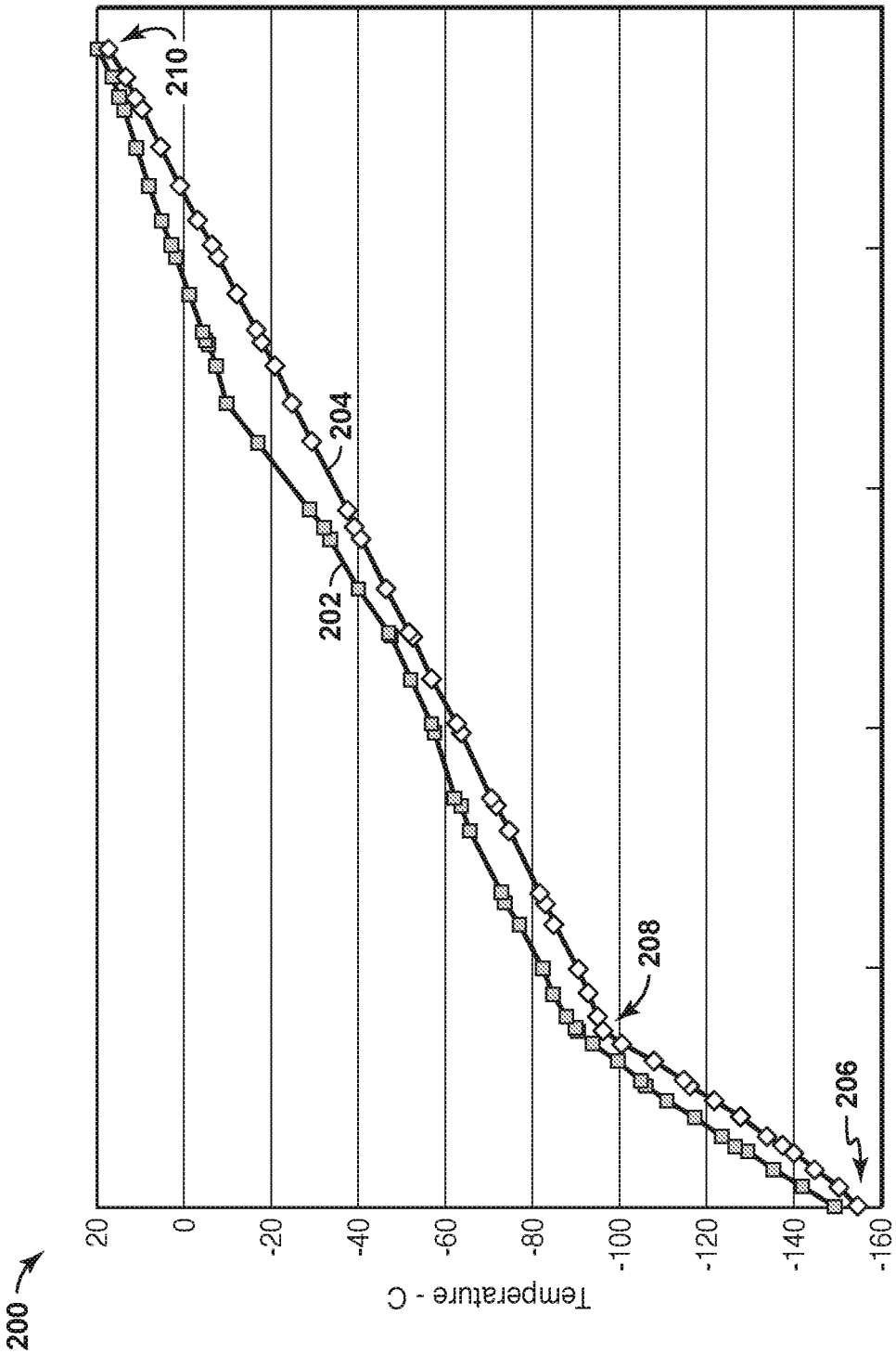
200
210
204
202
208
206
20
0
-20
-40
-60
-80
-100
-120
-140
-160
Temperature - C
Heat exchanged

FIG. 2

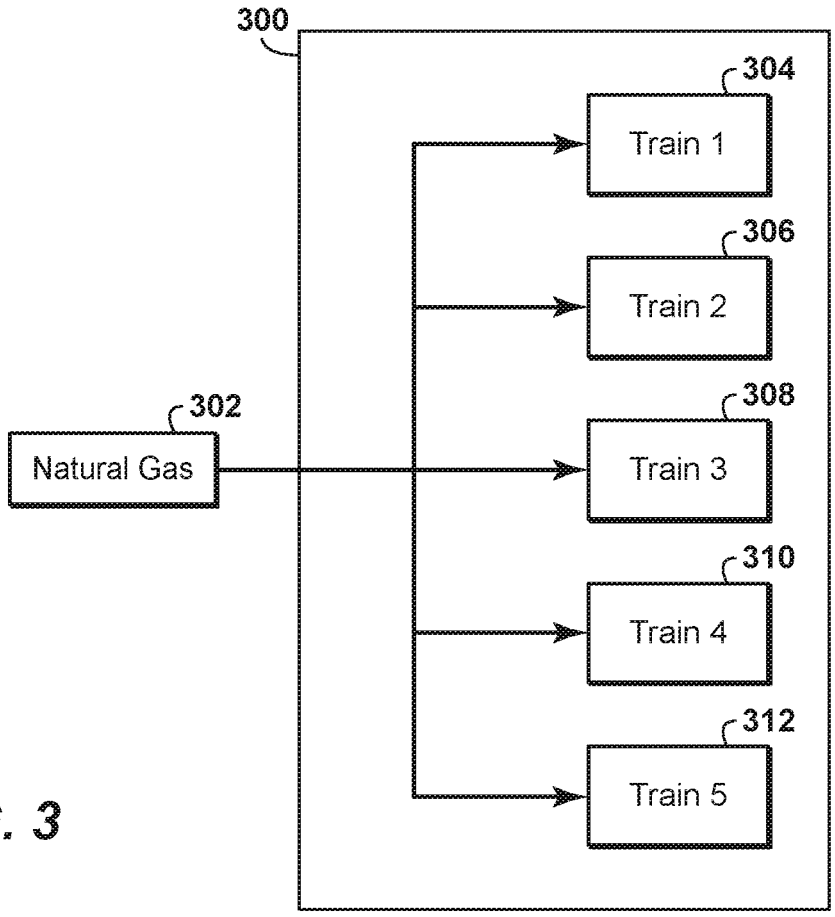
300
304
Train 1
306
Train 2
302
Natural Gas
308
Train 3
310
Train 4
312
Train 5

FIG. 3

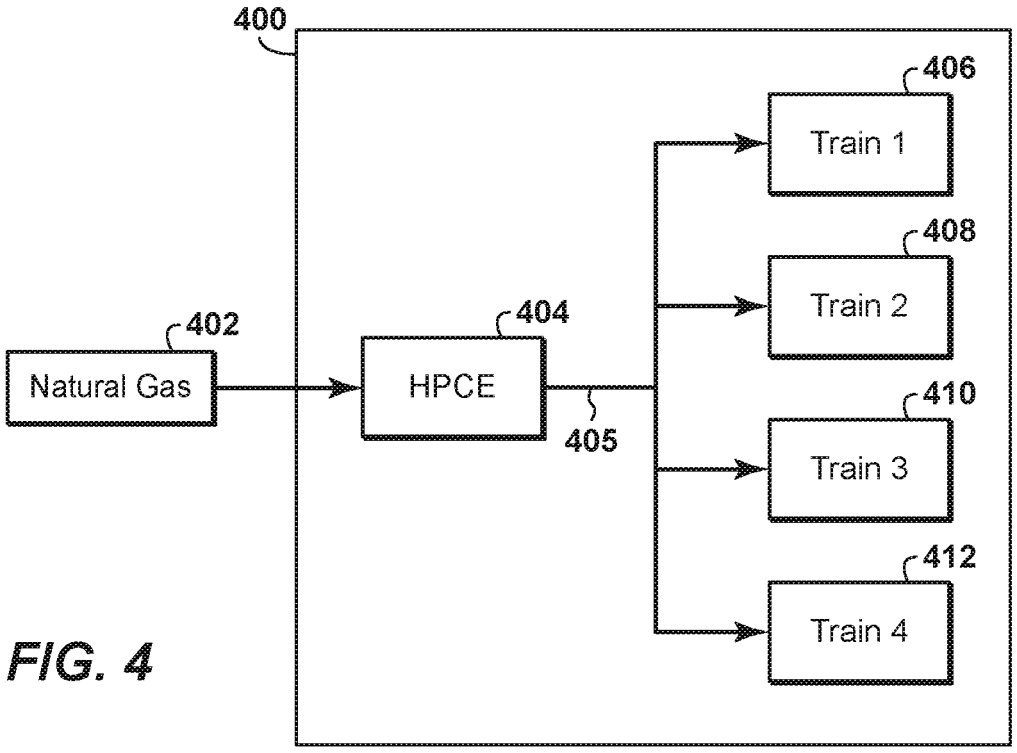
400
406
Train 1
408
Train 2
402
Natural Gas
404
HPCE
405
410
Train 3
412
Train 4

FIG. 4

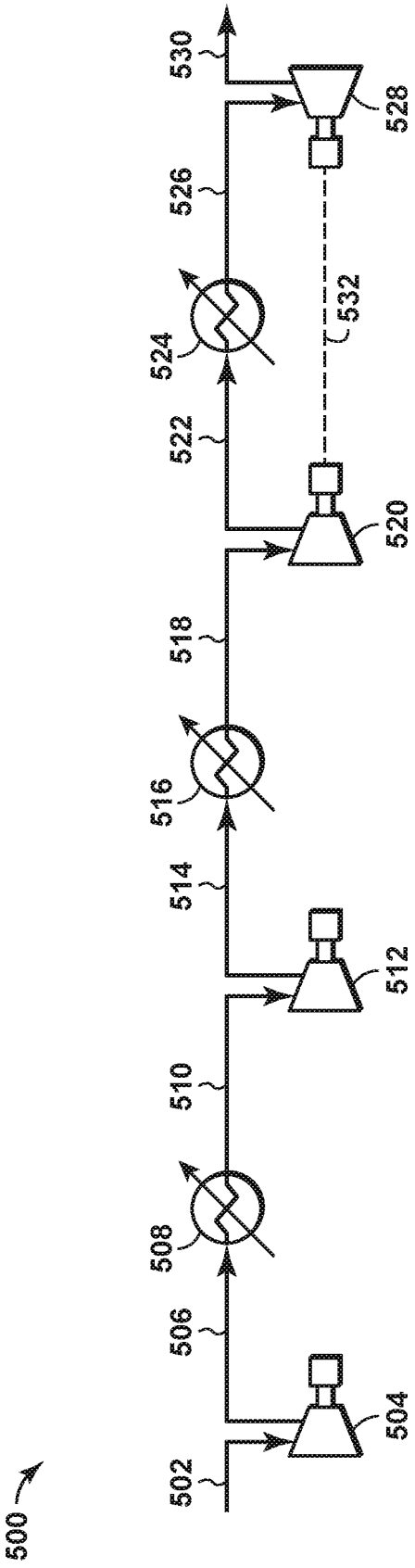
500
502
504
506
508
510
512
514
516
518
520
522
524
526
528
530
532

FIG. 5

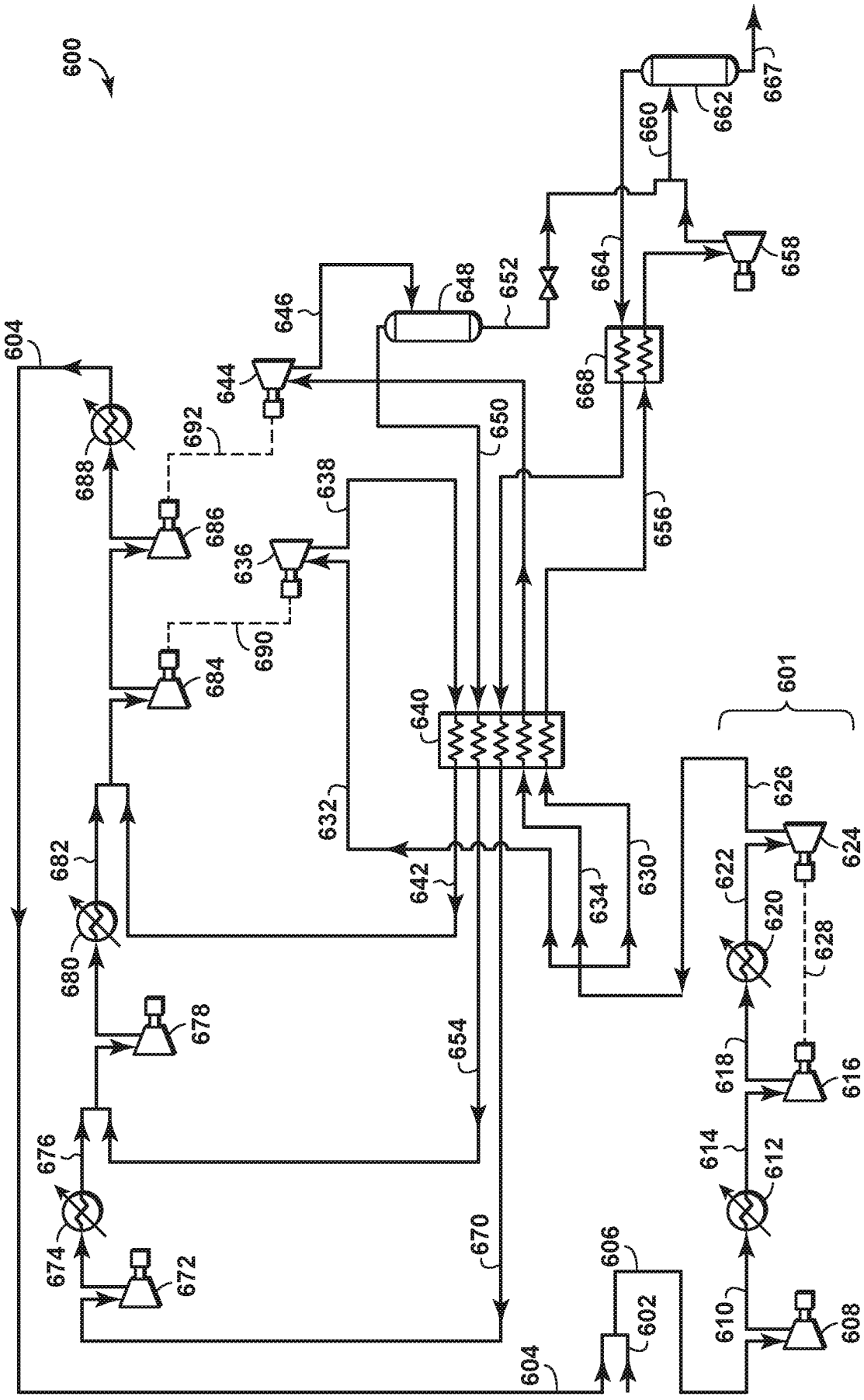
600
601
602
604
606
608
610
612
614
616
618
620
622
624
626
628
630
632
634
636
638
640
642
644
646
648
650
652
654
656
658
660
662
664
667
668
670
672
674
676
678
680
682
684
686
688
690
692

FIG. 6

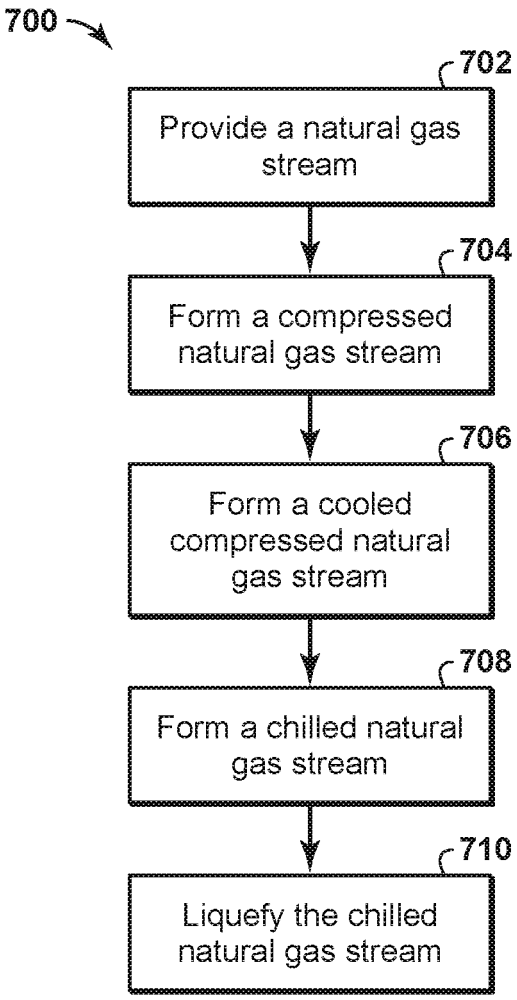
700
702
Provide a natural gas stream
704
Form a compressed natural gas stream
706
Form a cooled compressed natural gas stream
708
Form a chilled natural gas stream
710
Liquefy the chilled natural gas stream

*FIG. 7*

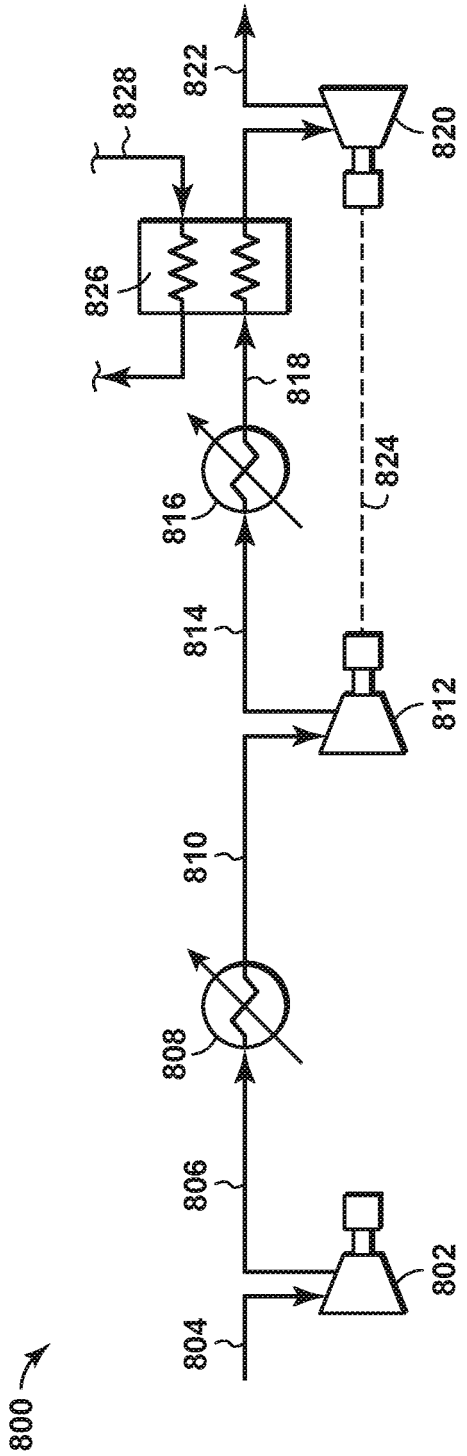


FIG. 8

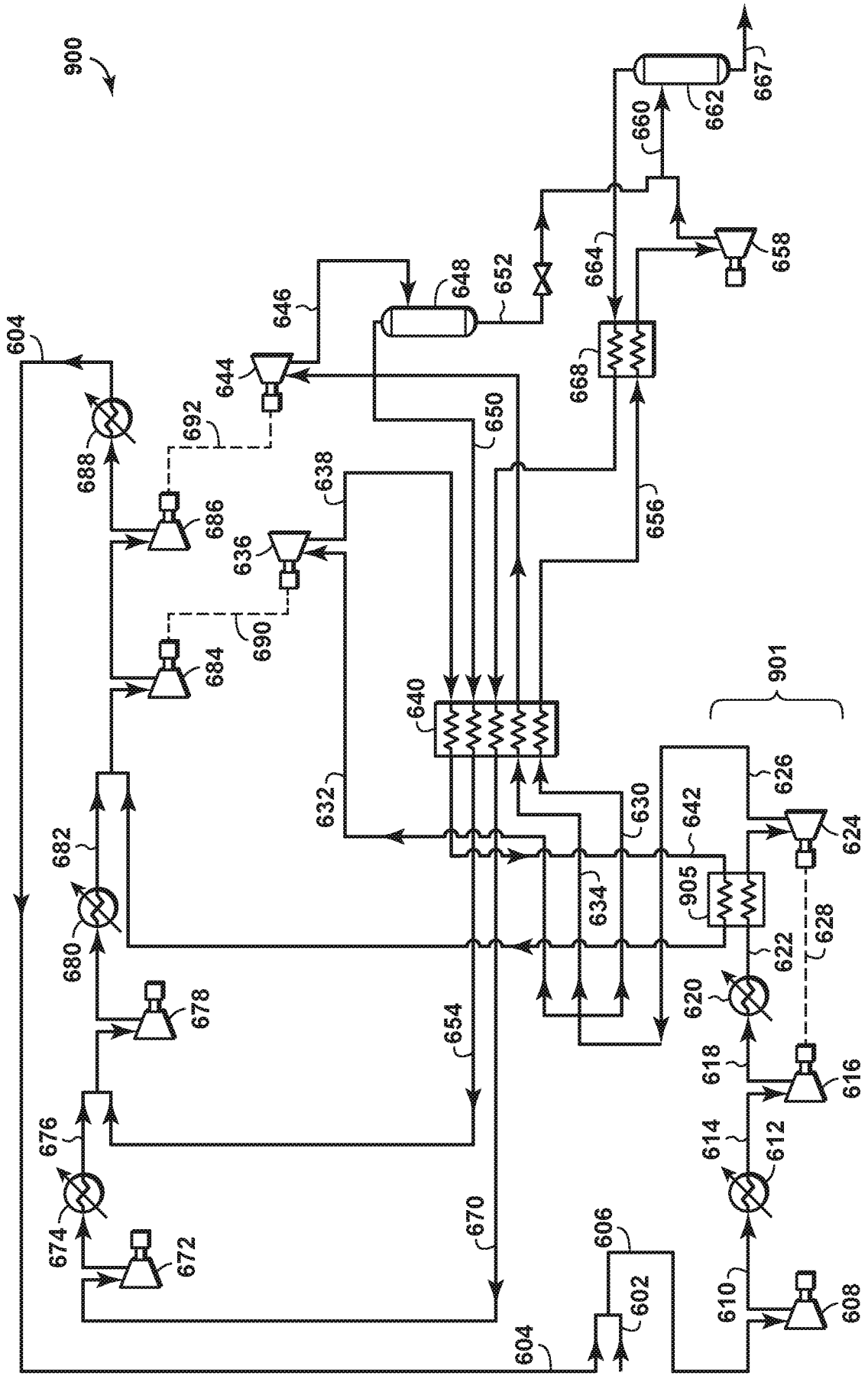
900
604
688
692
686
684
690
682
680
678
676
674
672
644
646
648
652
650
638
636
632
640
654
670
606
602
604
610
608
614
612
618
616
620
622
628
624
626
901
905
642
630
634
656
668
664
658
660
662
667

FIG. 9

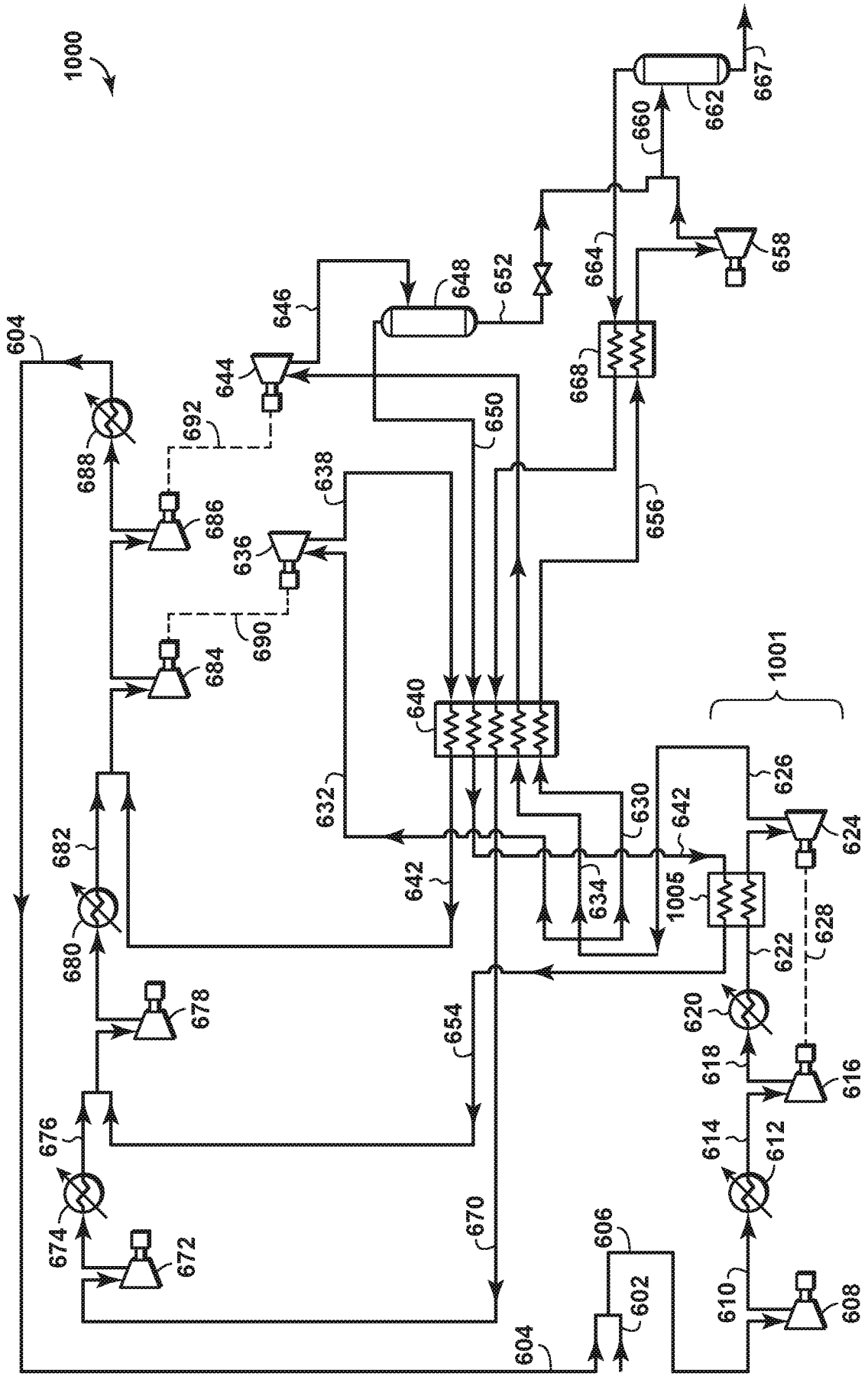
1000
604
688
692
686
684
690
682
680
678
676
674
672
644
646
648
652
650
638
636
640
632
642
634
630
1005
1001
626
624
628
622
620
618
616
614
612
610
608
606
602
670
654
656
668
664
660
662
667
658

FIG. 10

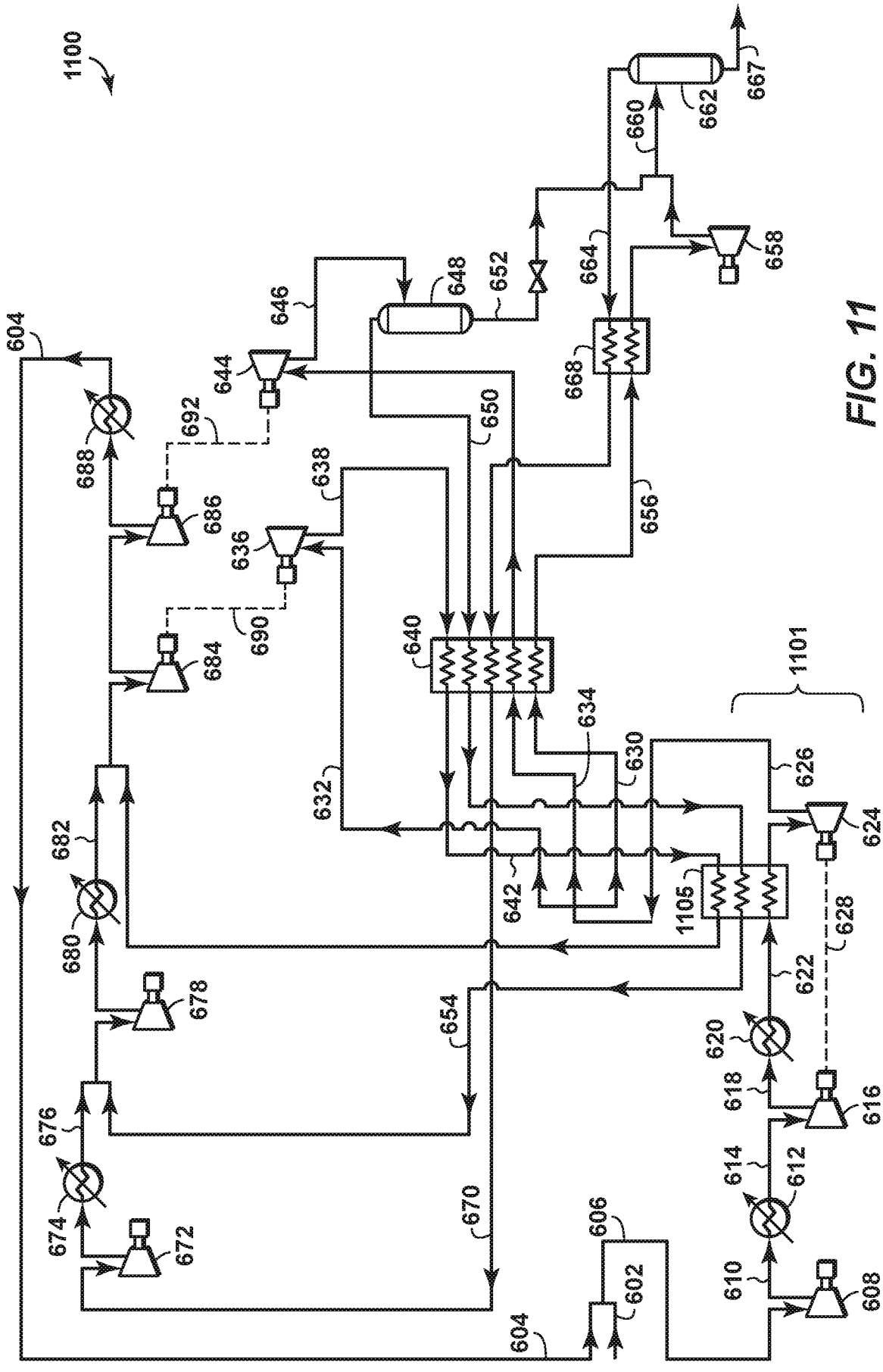
1100
604
688
692
686
684
690
682
680
678
676
674
672
644
646
648
652
650
638
636
640
632
634
630
642
1105
1101
626
624
628
622
620
618
616
614
612
610
608
606
602
654
670
664
660
662
667
658
668
656

FIG. 11

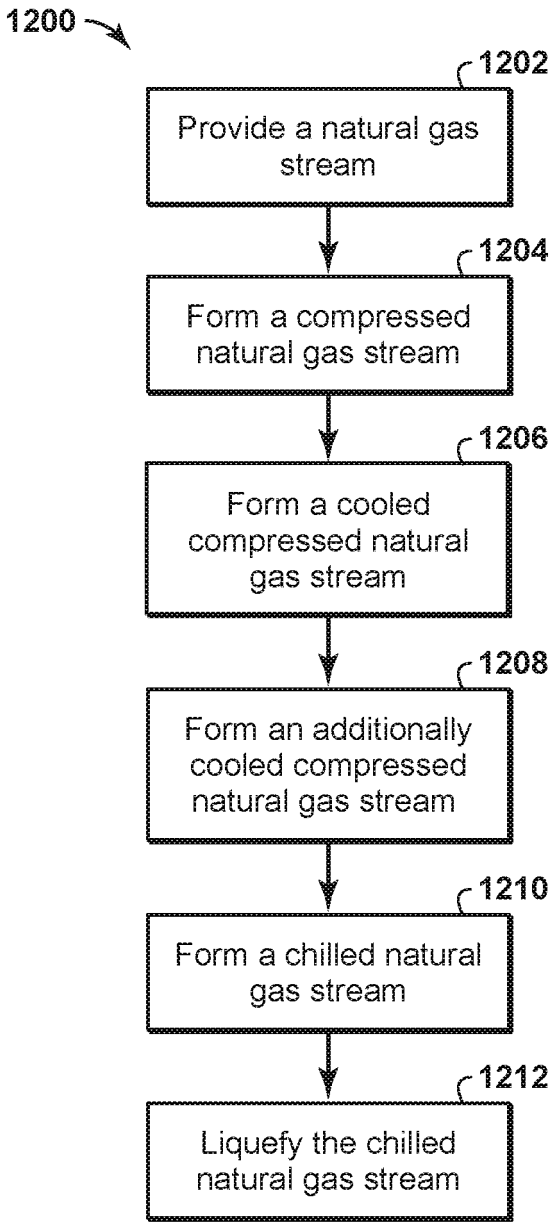
1200
1202
Provide a natural gas stream
1204
Form a compressed natural gas stream
1206
Form a cooled compressed natural gas stream
1208
Form an additionally cooled compressed natural gas stream
1210
Form a chilled natural gas stream
1212
Liquefy the chilled natural gas stream

*FIG. 12*