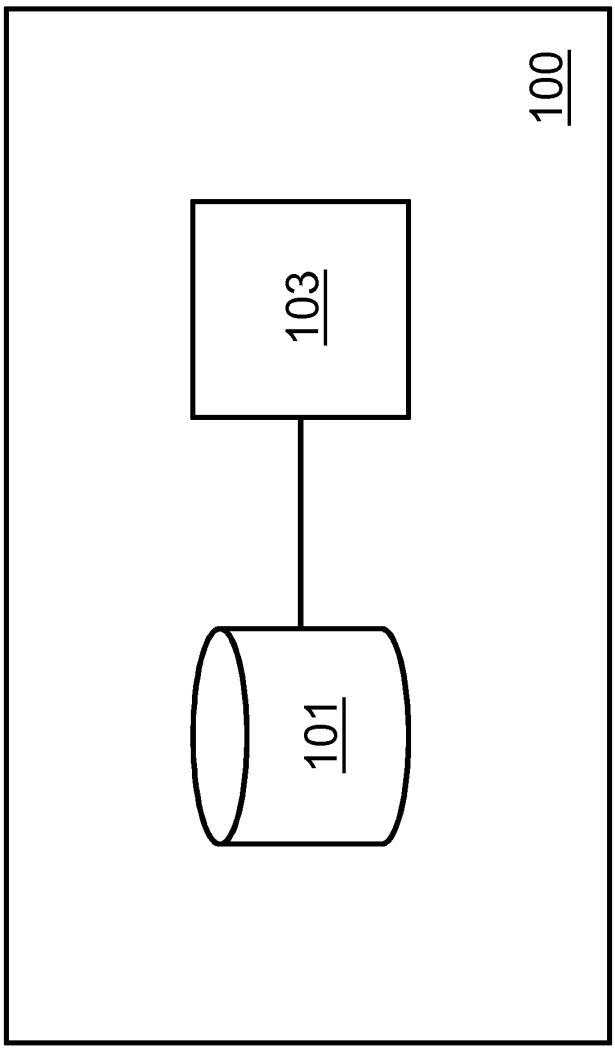

Fig. 1

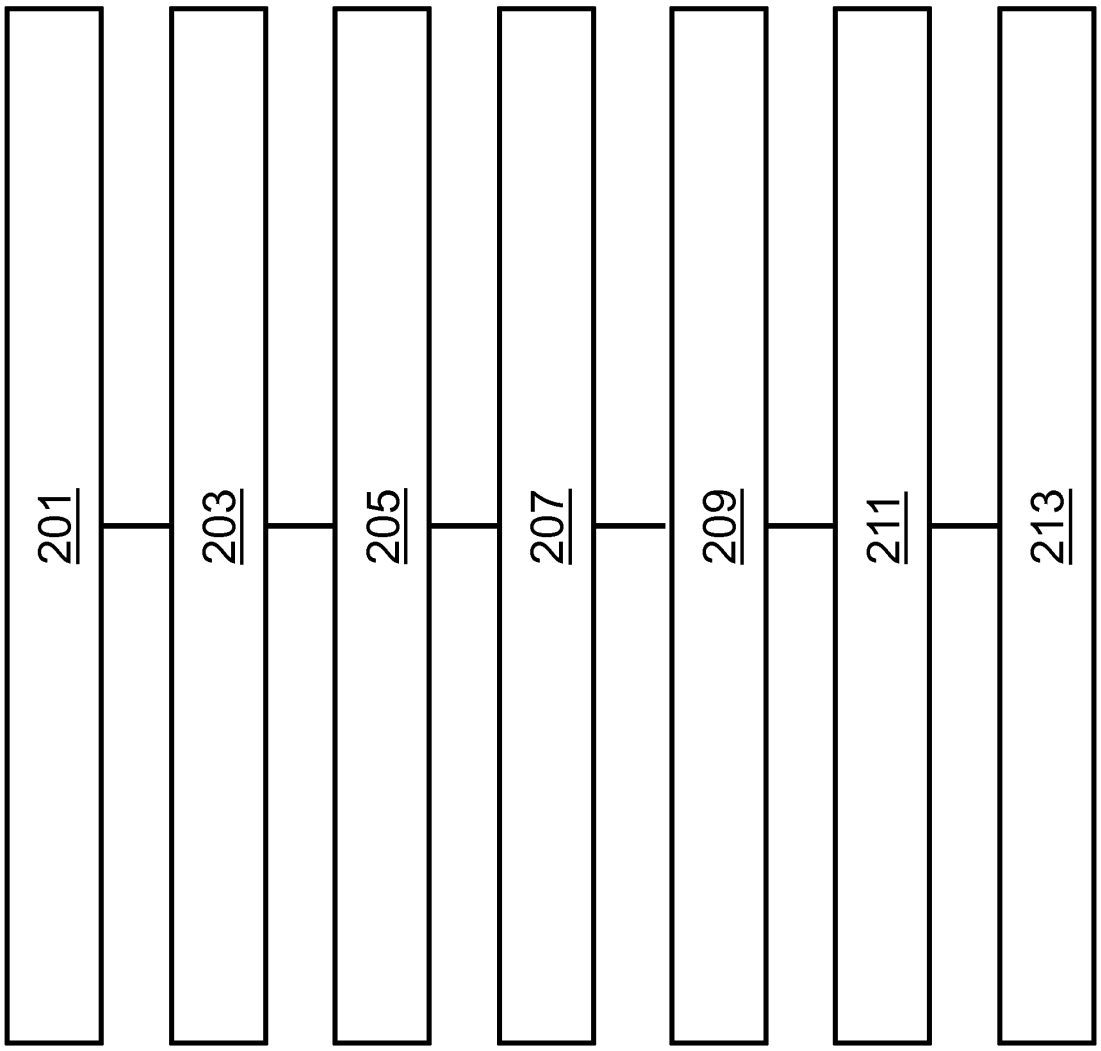

Fig. 2

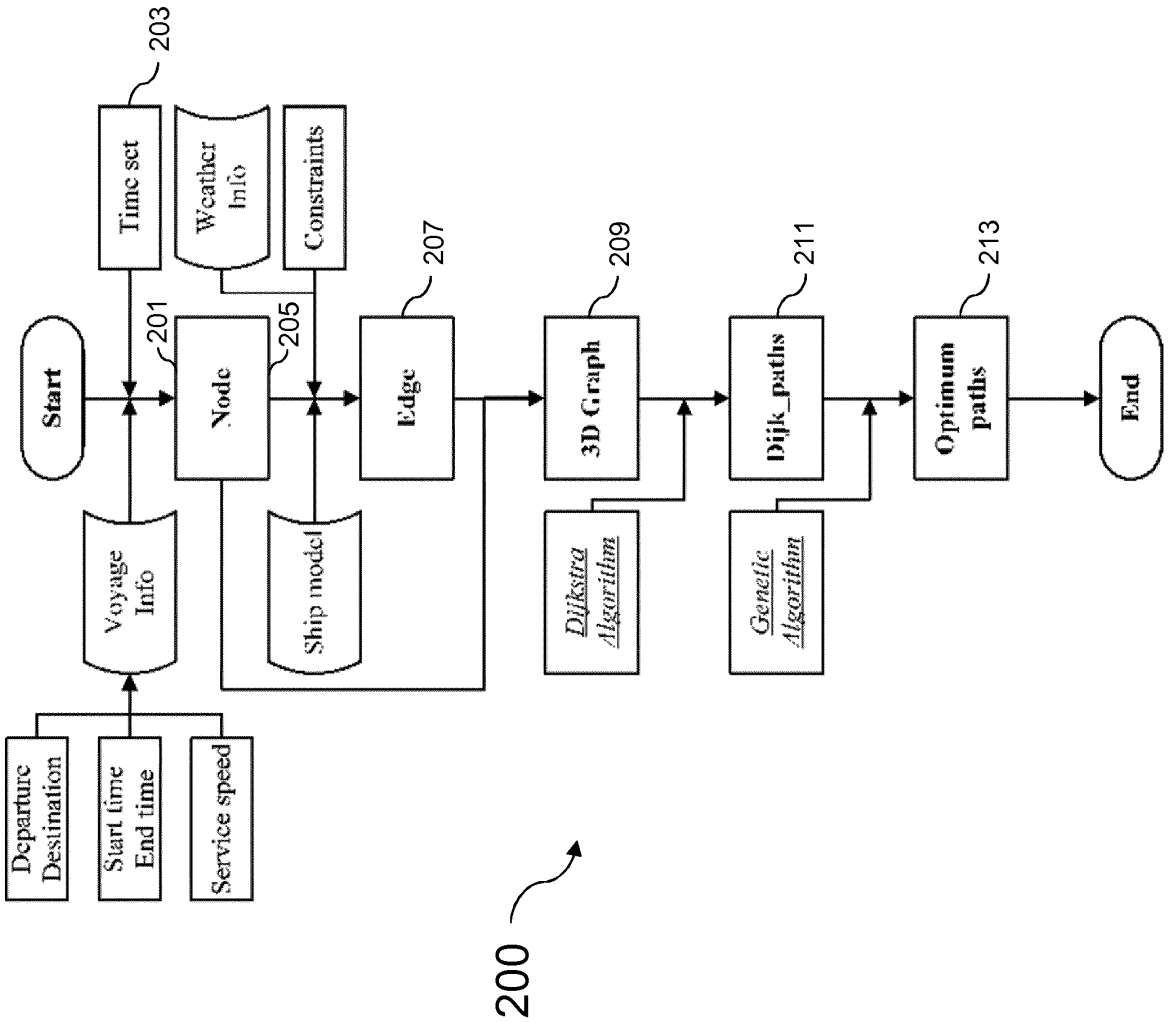
Departure
Destination
Start time
End time
Service speed
Voyage Info
Time set
Weather Info
Constraints
Ship model
Start
Node
Edge
3D Graph
Dijk_paths
Optimum paths
End
Dijkstra Algorithm
Genetic Algorithm
201
203
205
207
209
211
213
200

Fig. 3

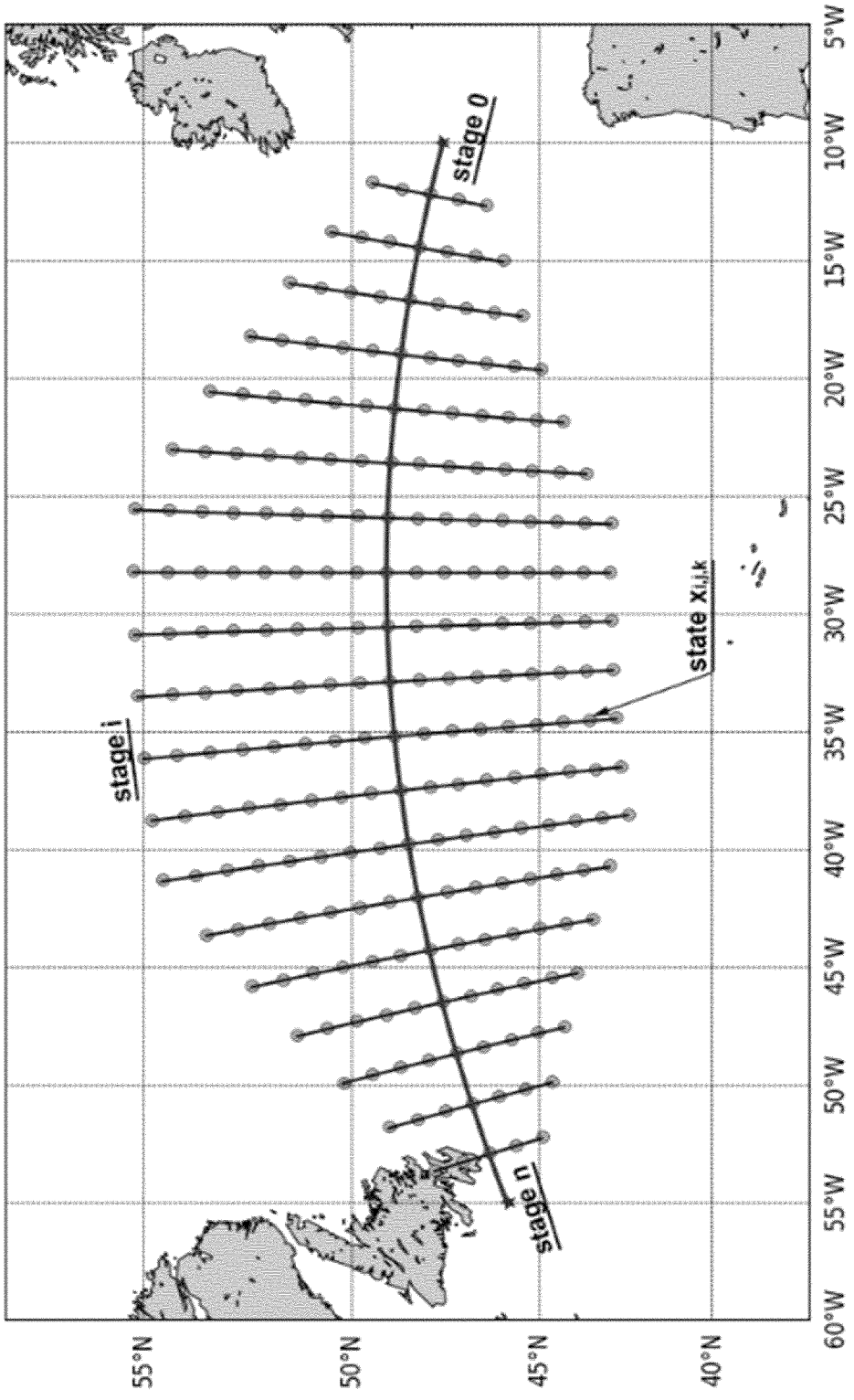
stage 0
stage i
state $x_{i,j,k}$
stage n
60°W
55°W
50°W
45°W
40°W
35°W
30°W
25°W
20°W
15°W
10°W
5°W
55°N
50°N
45°N
40°N

Fig. 4

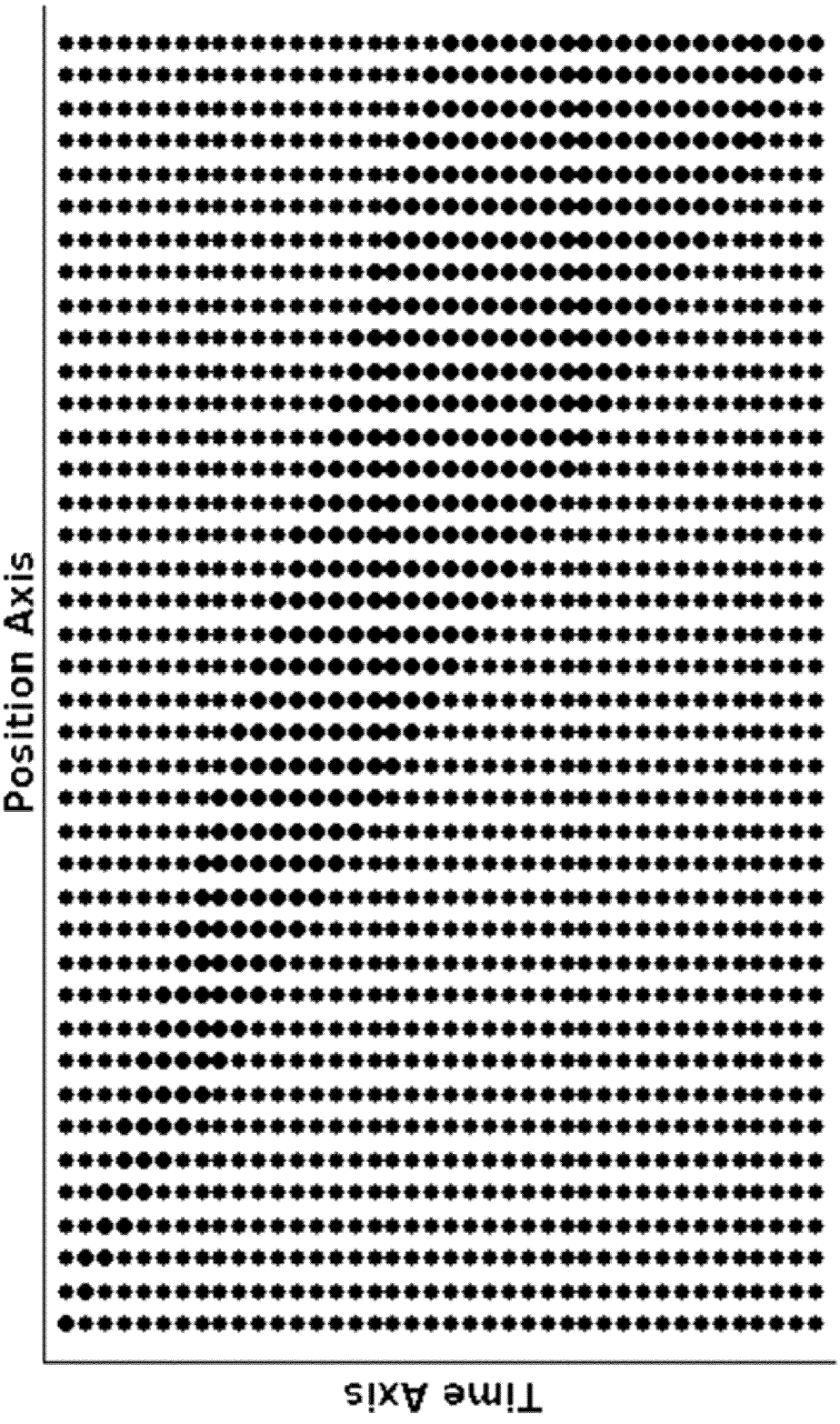

Fig. 5

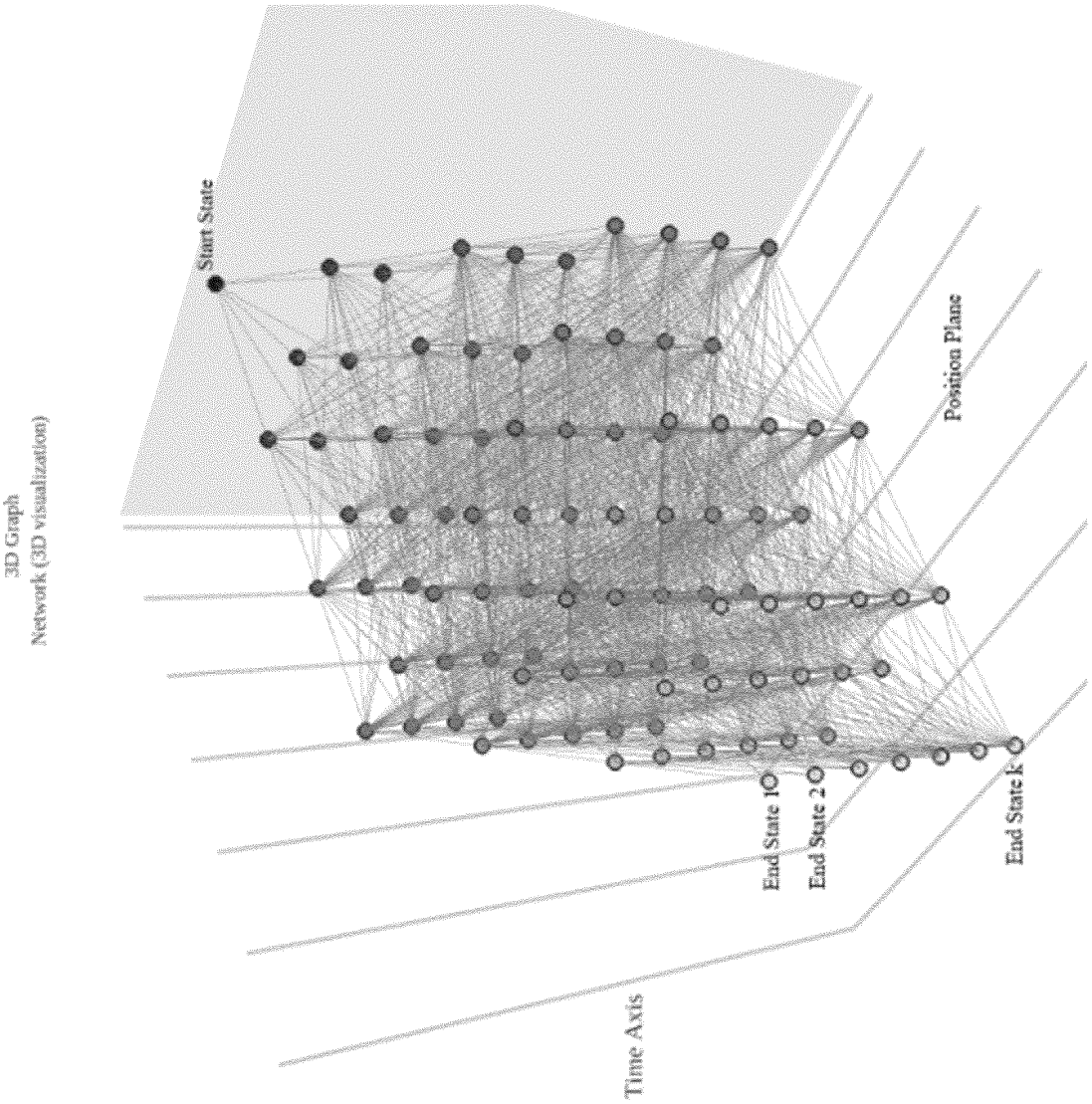
3D Graph
Network (3D visualization)
Start State
Position Plane
End State 1
End State 2
End State k
Time Axis

Fig. 6

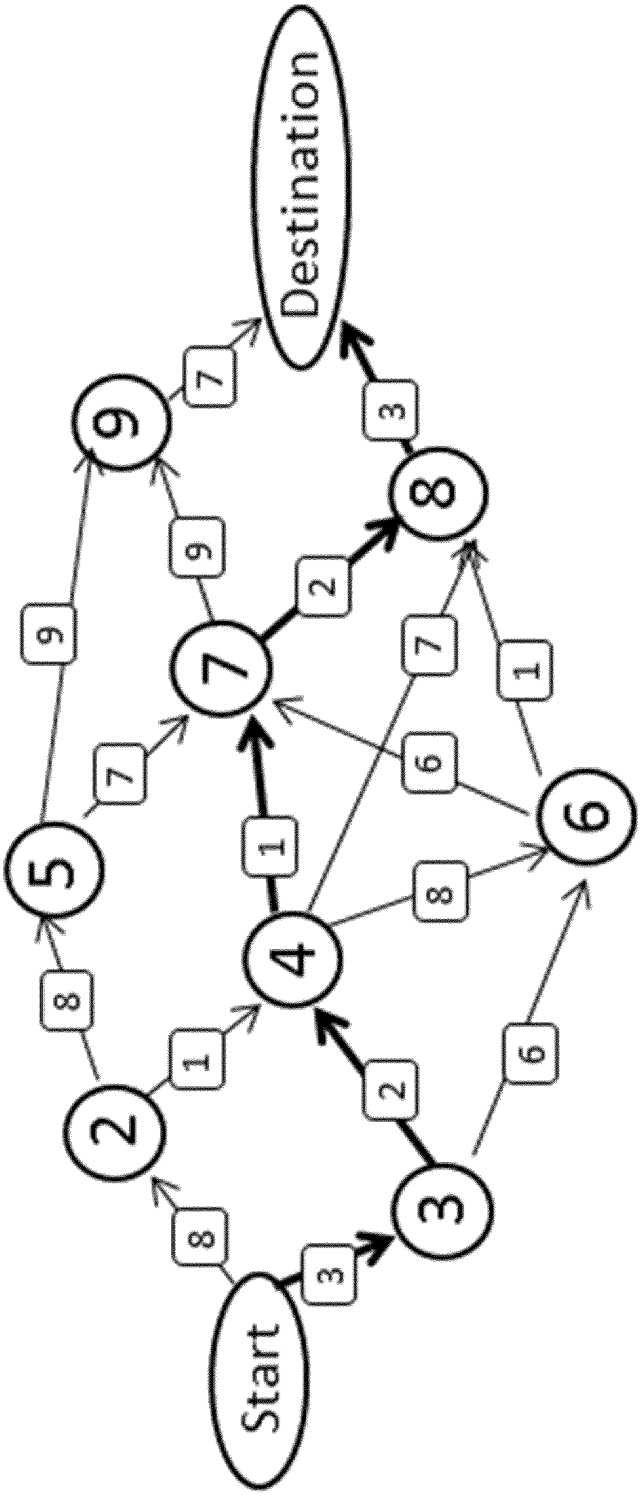

Fig. 7

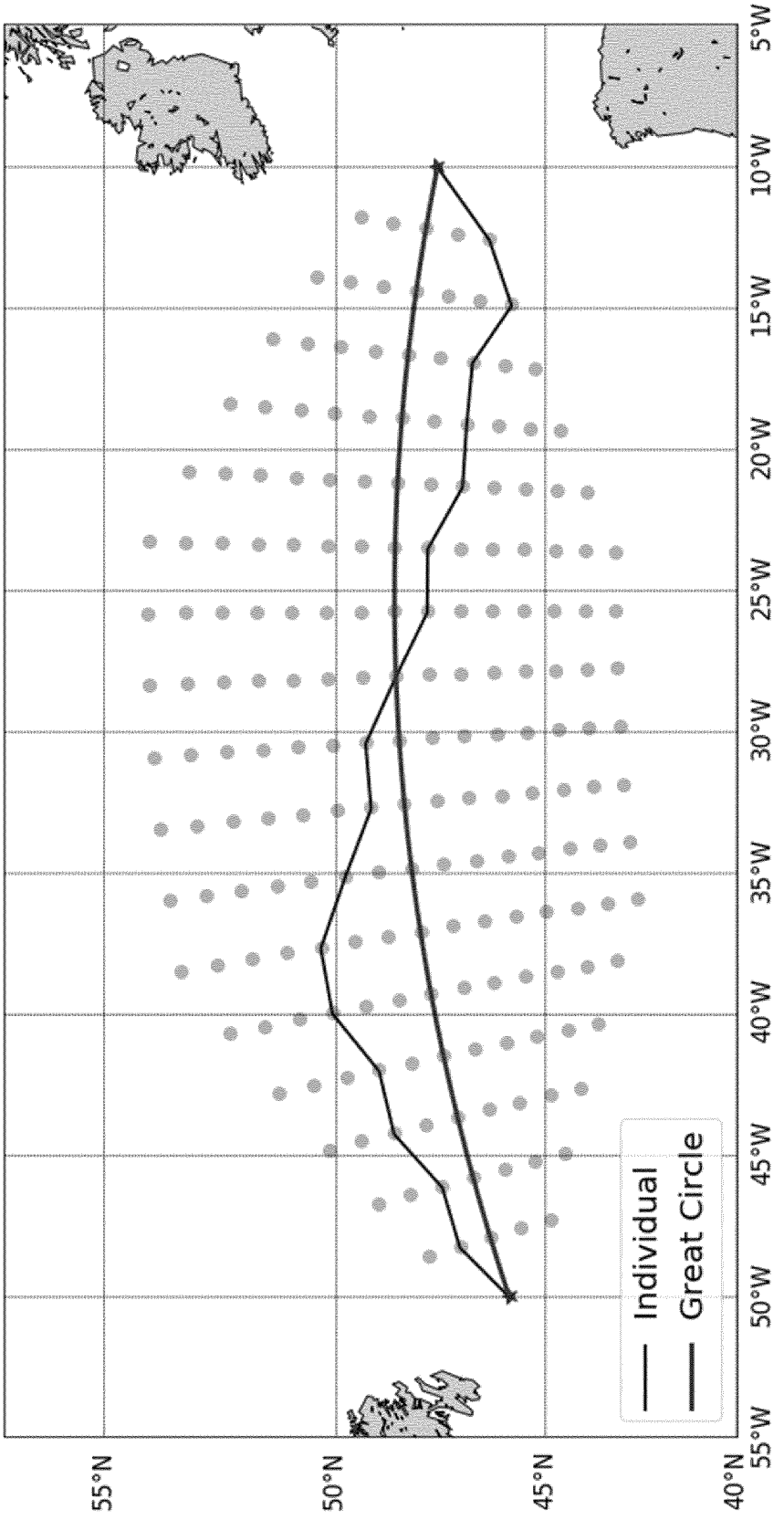
55°N
50°N
45°N
40°N
55°W
50°W
45°W
40°W
35°W
30°W
25°W
20°W
15°W
10°W
5°W
Individual
Great Circle

Fig. 8

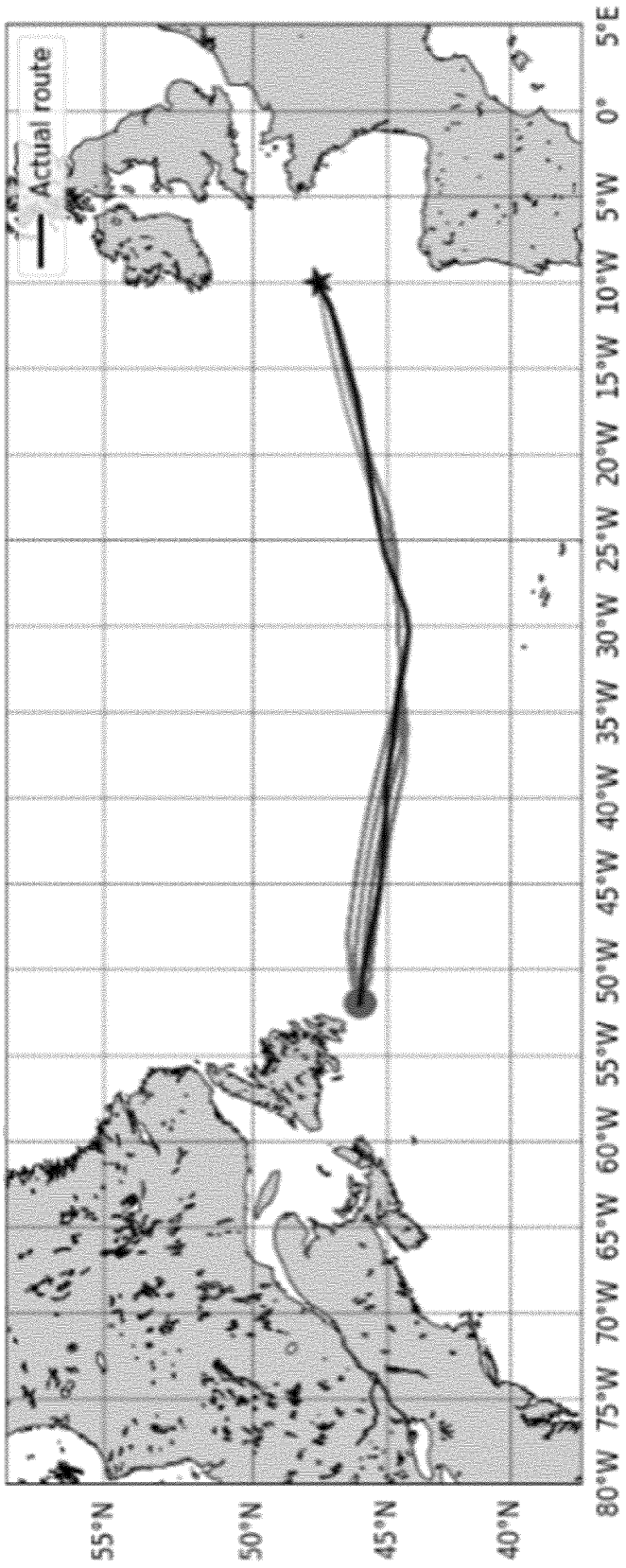
Actual route
80°W 75°W 70°W 65°W 60°W 55°W 50°W 45°W 40°W 35°W 30°W 25°W 20°W 15°W 10°W 5°W 0° 5°E
55°N
50°N
45°N
40°N

Fig. 9

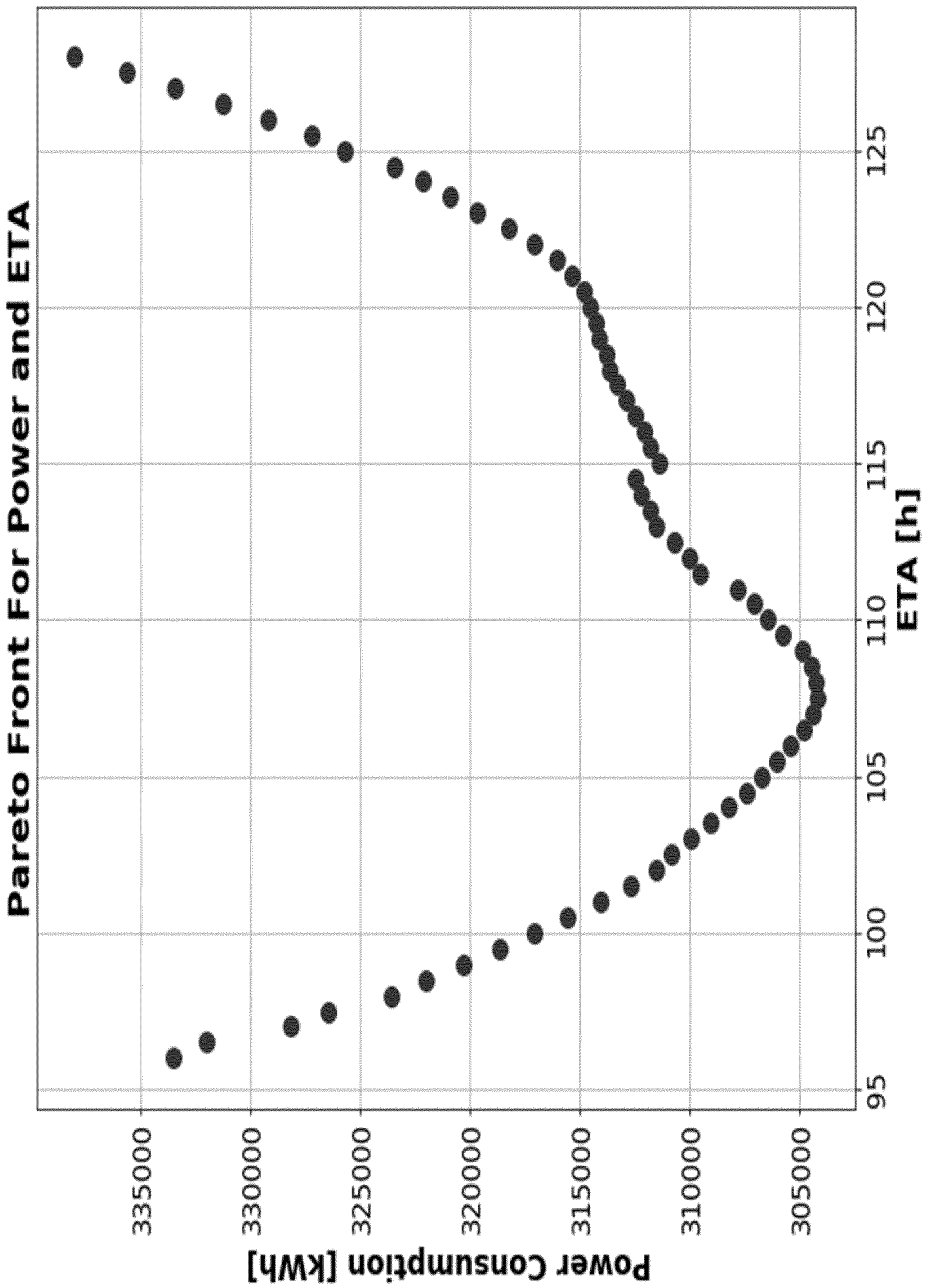
Pareto Front For Power and ETA
Power Consumption [kWh]
335000
330000
325000
320000
315000
310000
305000
95
100
105
110
115
120
125
ETA [h]

Fig. 10

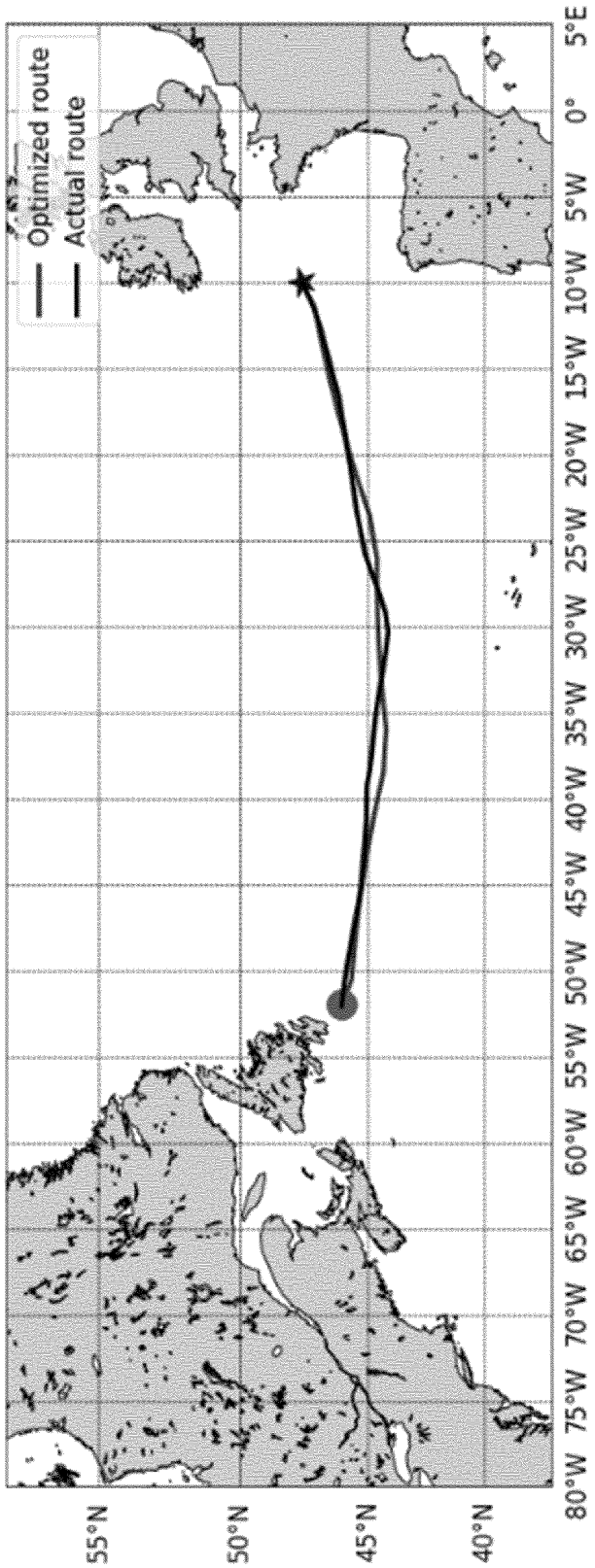
Optimized route
Actual route
55°N
50°N
45°N
40°N
80°W 75°W 70°W 65°W 60°W 55°W 50°W 45°W 40°W 35°W 30°W 25°W 20°W 15°W 10°W 5°W 0° 5°E

Fig. 11

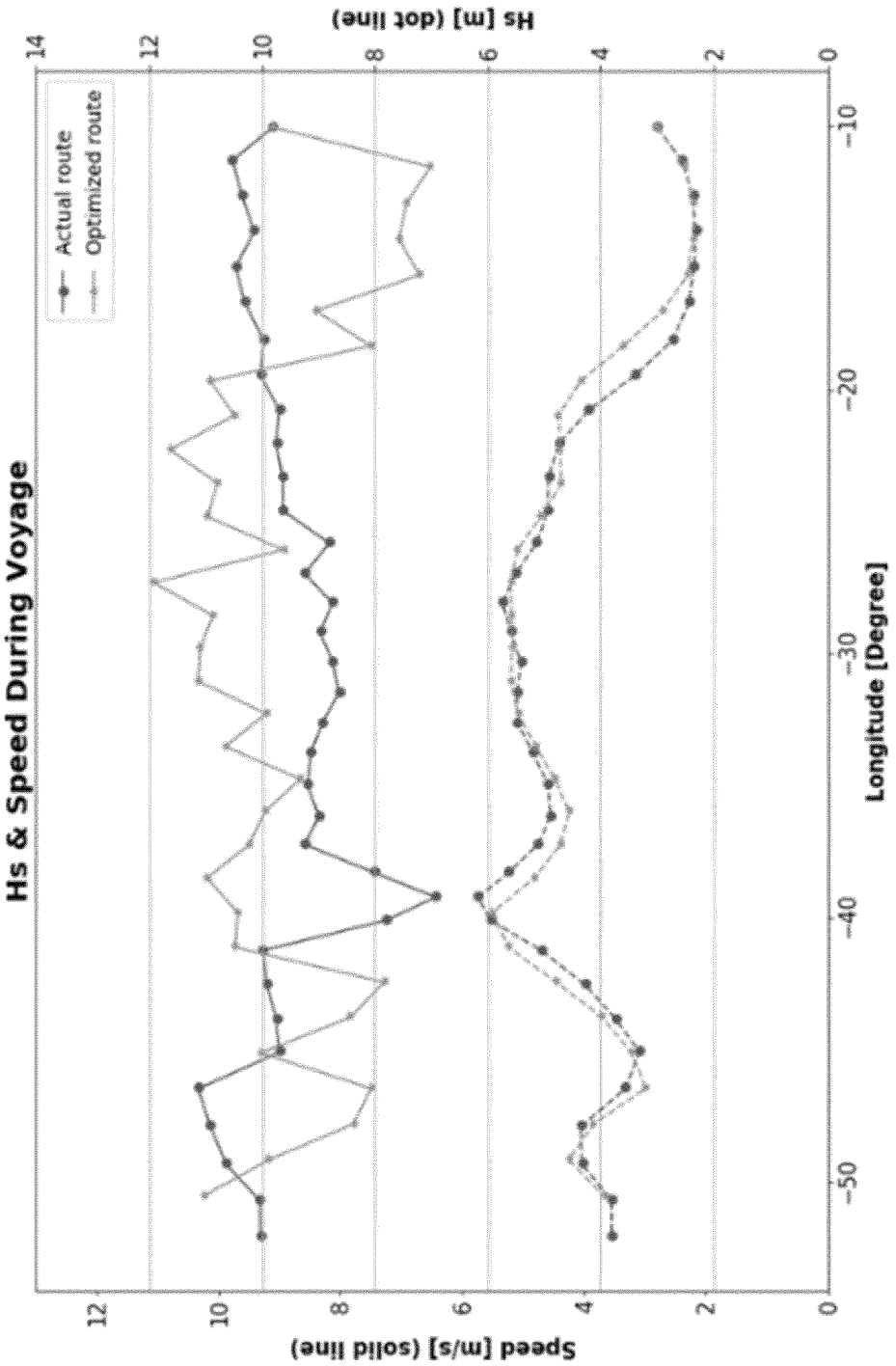
Hs & Speed During Voyage
Actual route
Optimized route
Speed [m/s] (solid line)
Hs [m] (dot line)
Longitude [Degree]
0
2
4
6
8
10
12
14
−10
−20
−30
−40
−50

Fig. 12

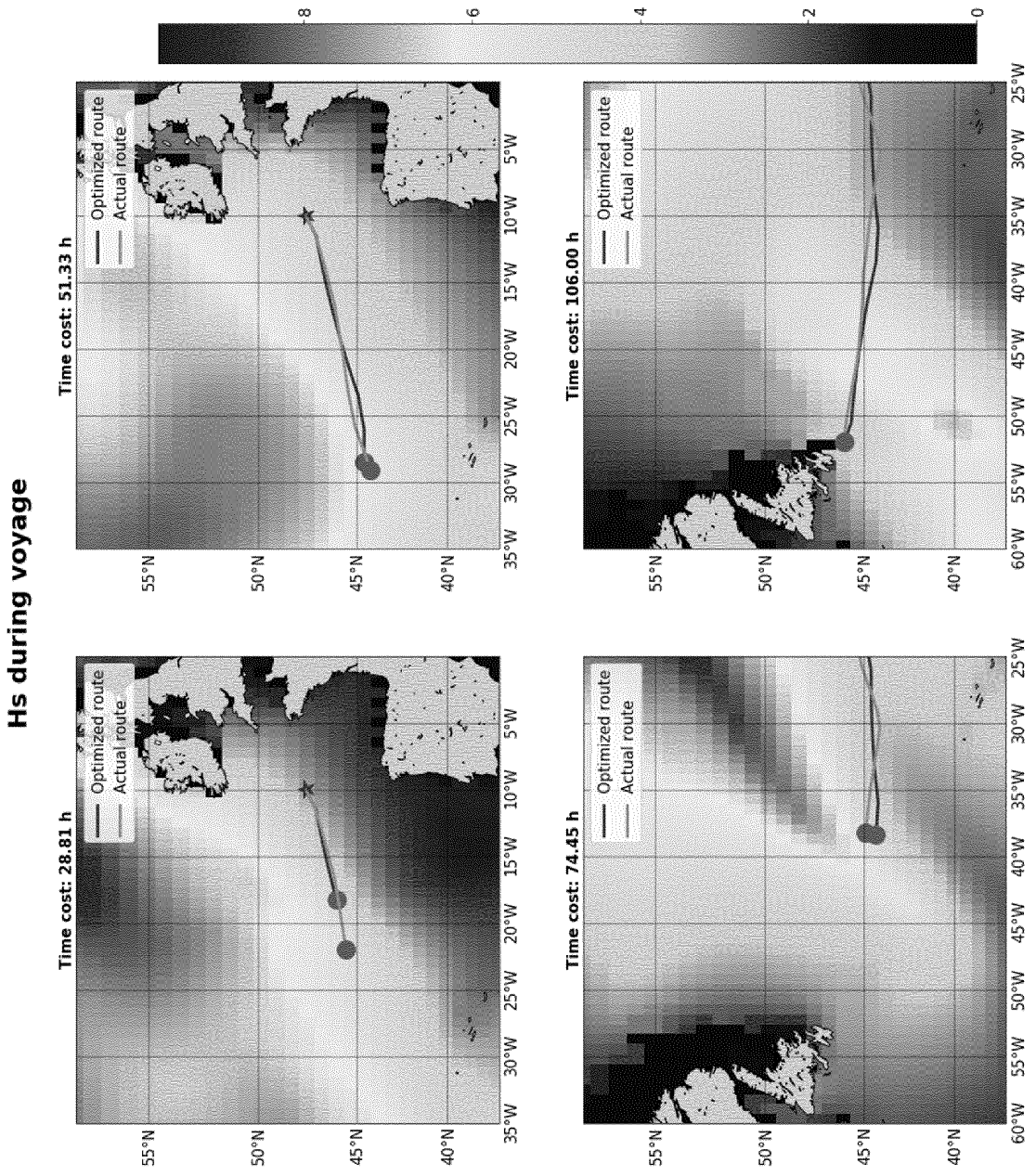
Hs during voyage
Time cost: 28.81 h
Time cost: 51.33 h
Time cost: 74.45 h
Time cost: 106.00 h
Optimized route
Actual route
55°N
50°N
45°N
40°N
35°W
30°W
25°W
20°W
15°W
10°W
5°W
60°W
55°W
50°W
45°W
40°W
35°W
30°W
25°W
8
6
4
2
0

Fig. 13