FIG. 1

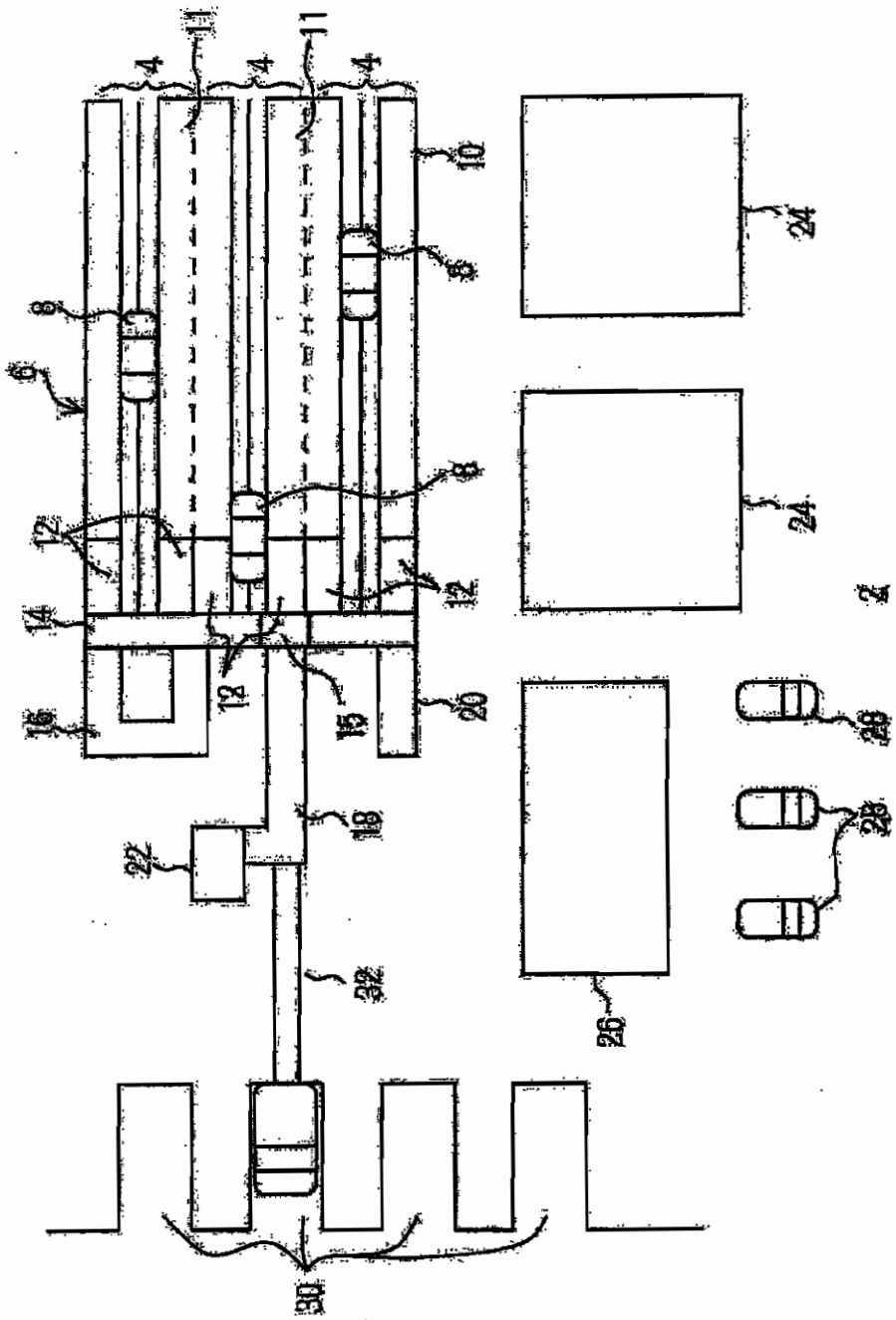

FIG. 2

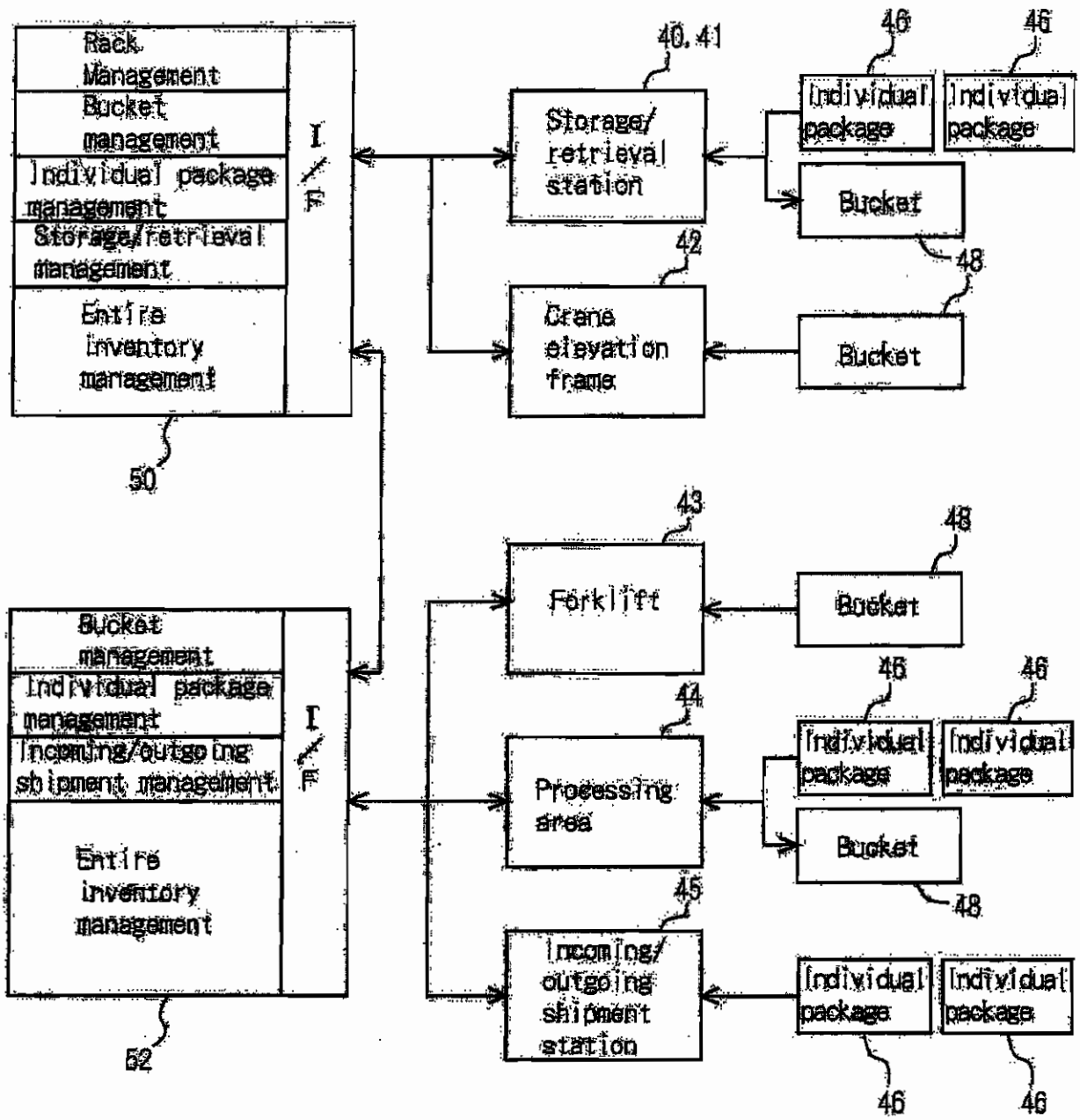
Rack Management
Bucket management
Individual package management
Storage/retrieval management
Entire inventory management
I/F
50
40.41
Storage/retrieval station
42
Crane elevation frame
46
Individual package
Bucket
48
43
Forklift
44
Processing area
45
Incoming/outgoing shipment station
52

FIG. 3

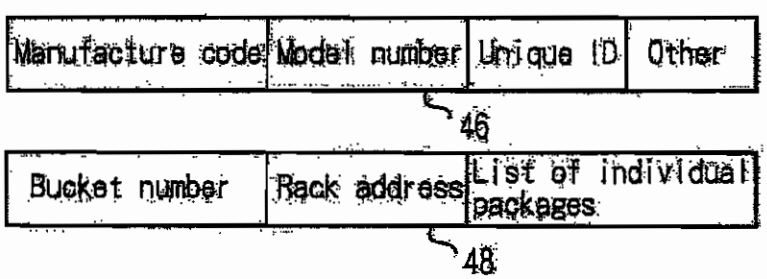
Manufacture code
Model number
Unique ID
Other
46
Bucket number
Rack address
List of individual packages
48

FIG. 4

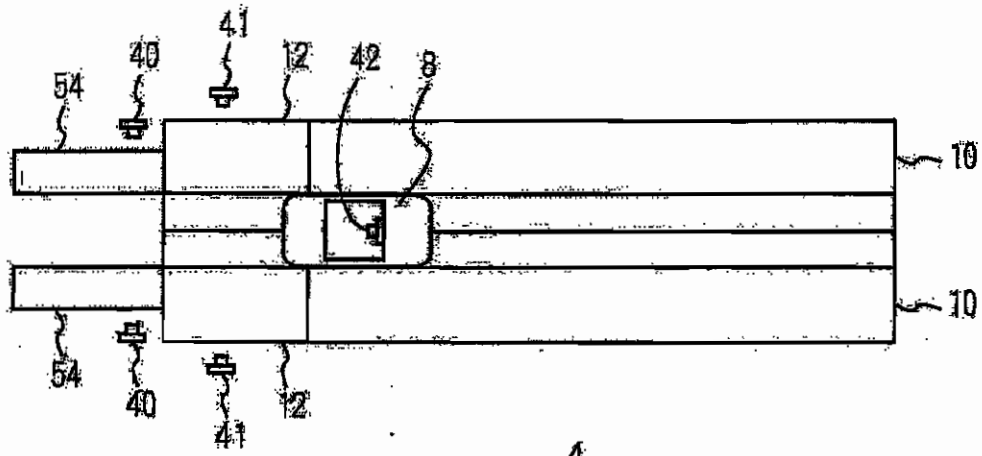
41
40
12
42
8
54
10
10
54
40
41
12

4

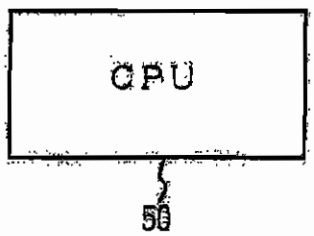
CPU
50

FIG. 5

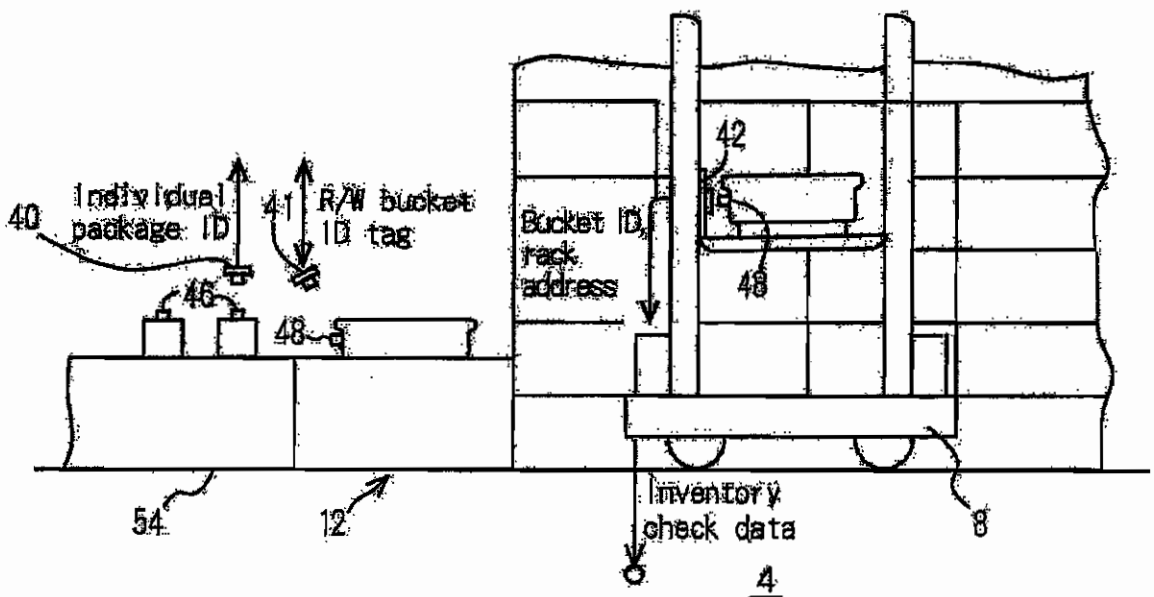
Individual package ID
40
41
R/W bucket ID tag
46
48
54
12
Bucket ID, rack address
42
48
Inventory check data
8
4

FIG. 6

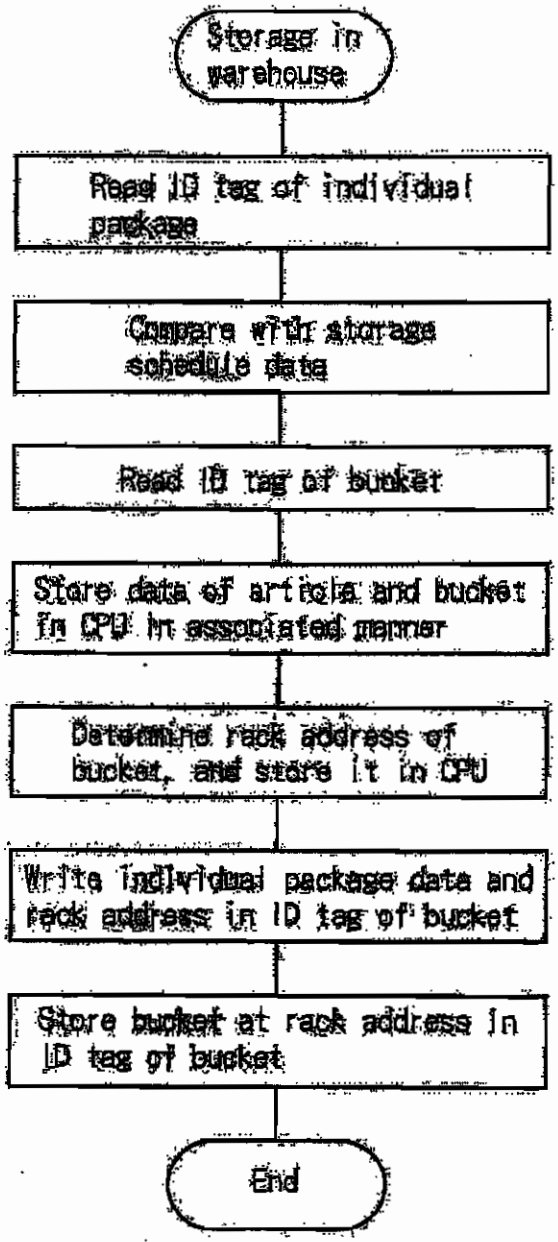
Storage in warehouse
Read ID tag of individual package
Compare with storage schedule data
Read ID tag of bucket
Store data of article and bucket in CPU in associated manner
Determine rack address of bucket, and store it in CPU
Write individual package data and rack address in ID tag of bucket
Store bucket at rack address in ID tag of bucket
End

FIG. 7

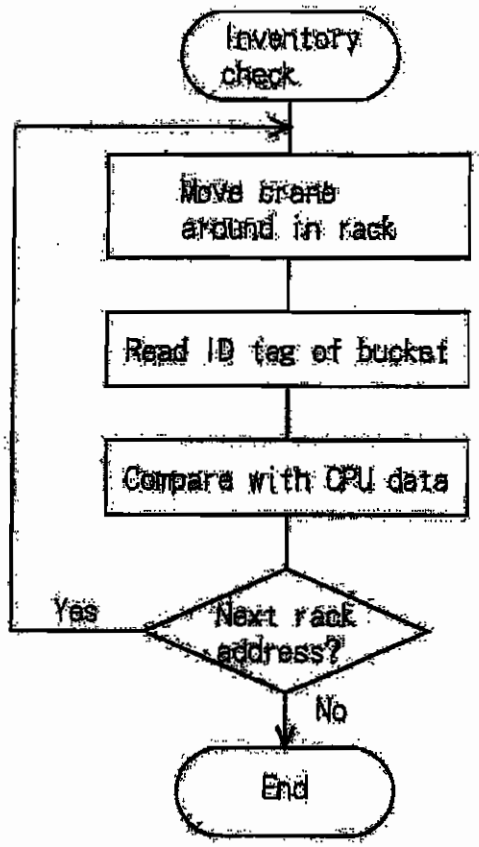
Inventory check
Move crane around in rack
Read ID tag of bucket
Compare with CPU data
Next rack address?
Yes
No
End

FIG. 8

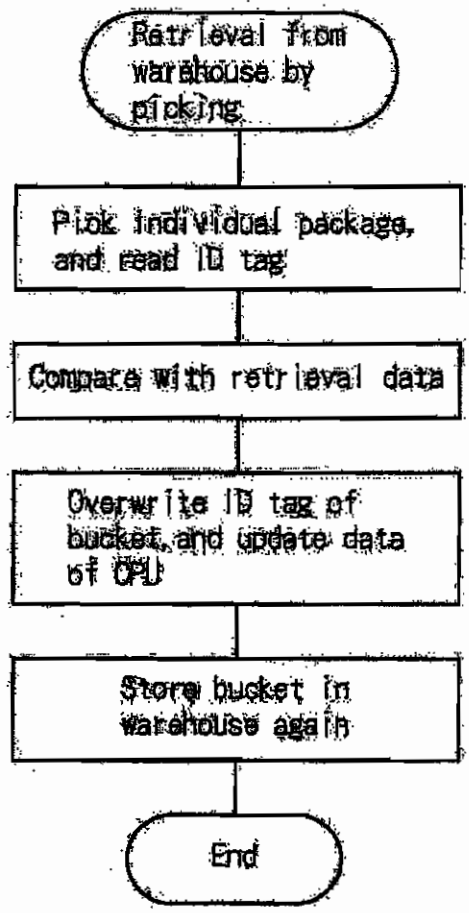
Retrieval from warehouse by picking
Pick individual package, and read ID tag
Compare with retrieval data
Overwrite ID tag of bucket and update data of CPU
Store bucket in warehouse again
End