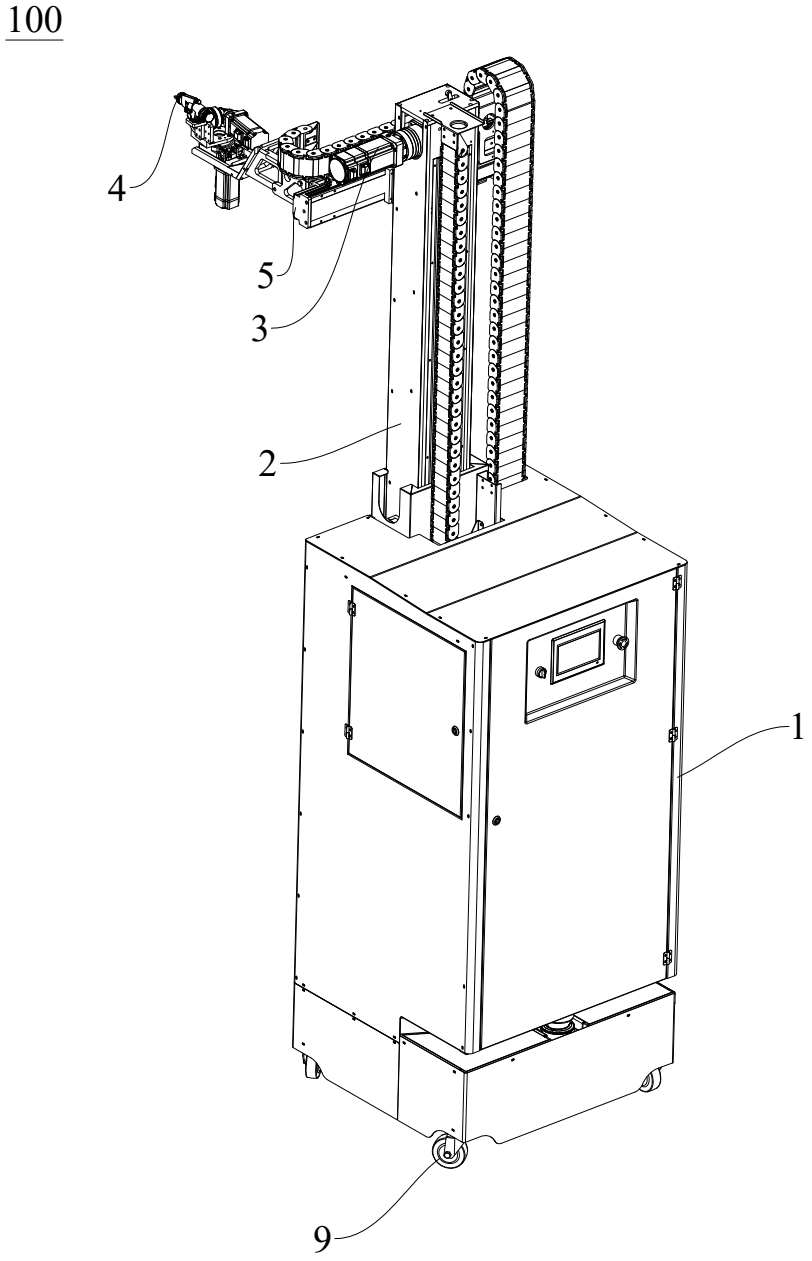

FIG. 1

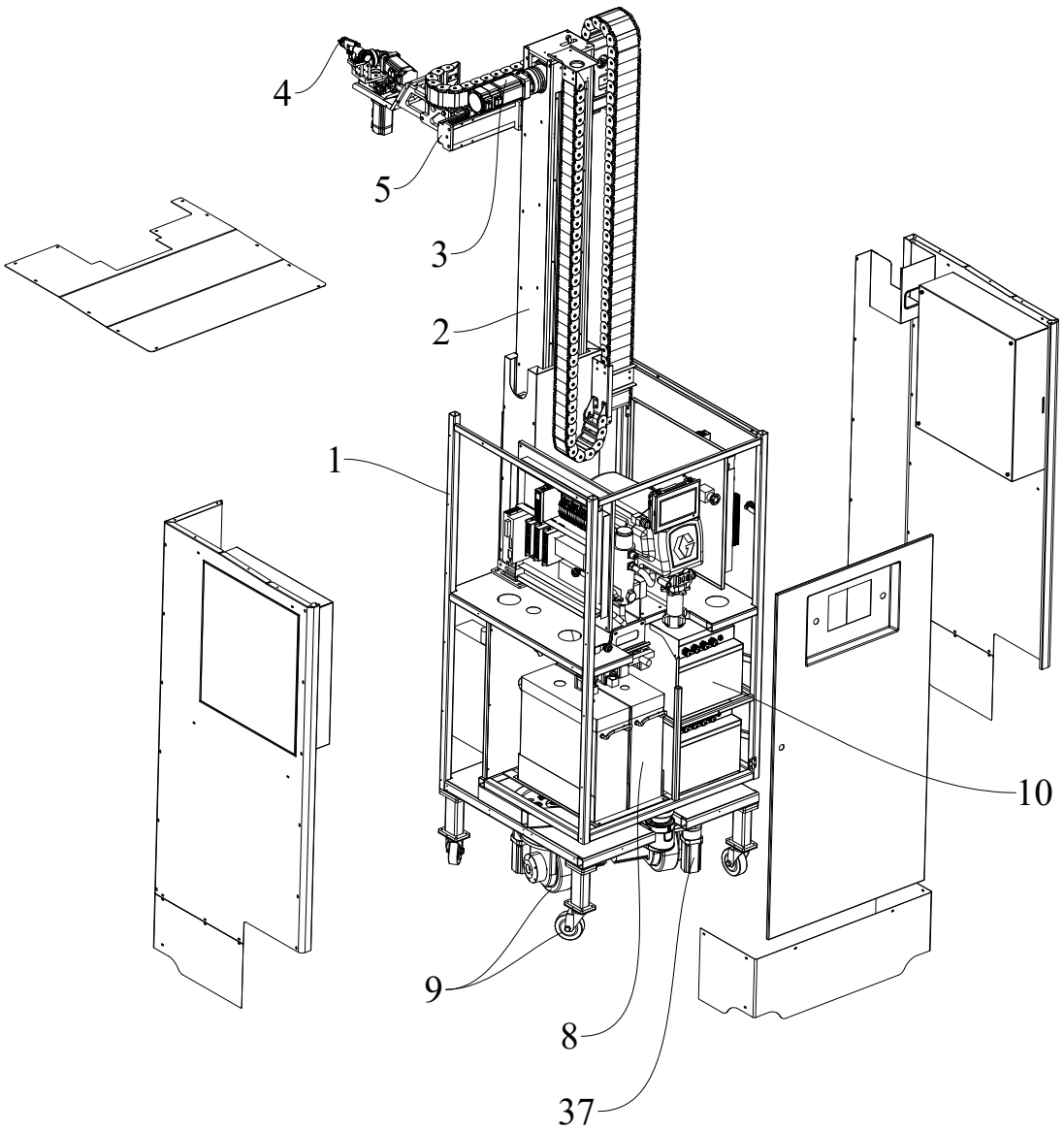

FIG. 2

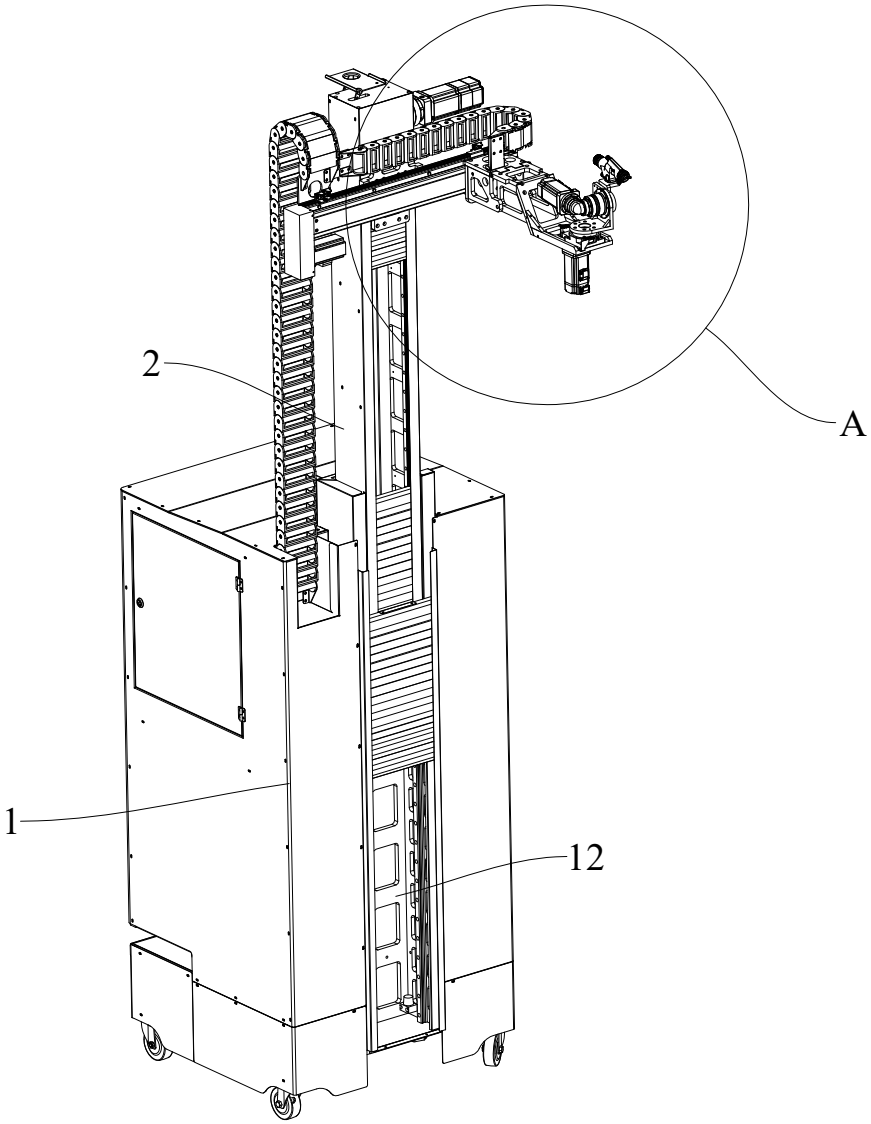

FIG. 3

A-A

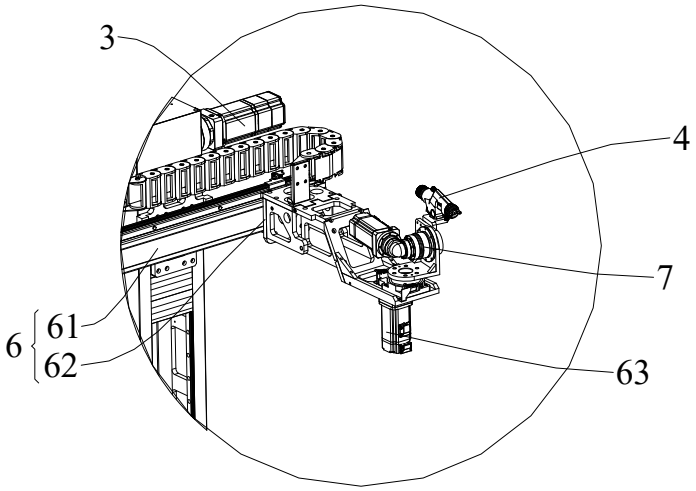

FIG. 4

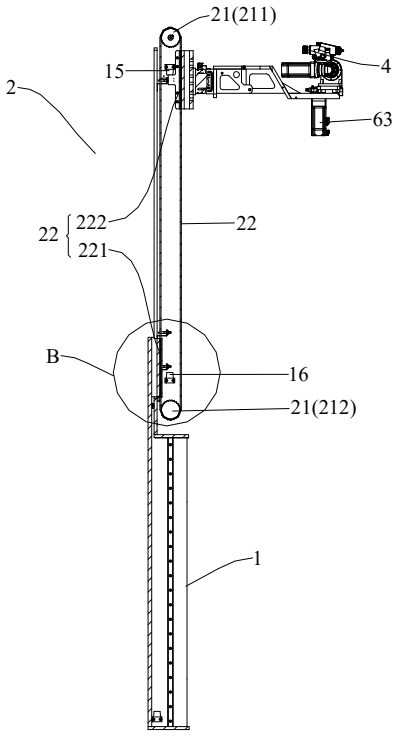

FIG. 5

B-B

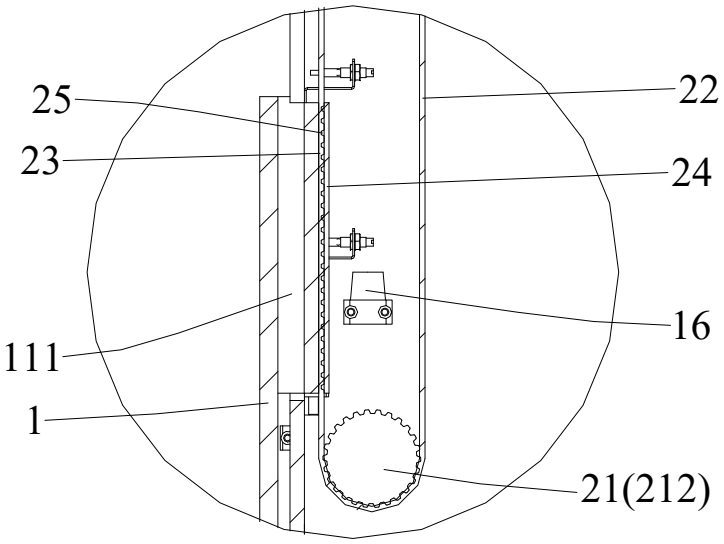

FIG. 6

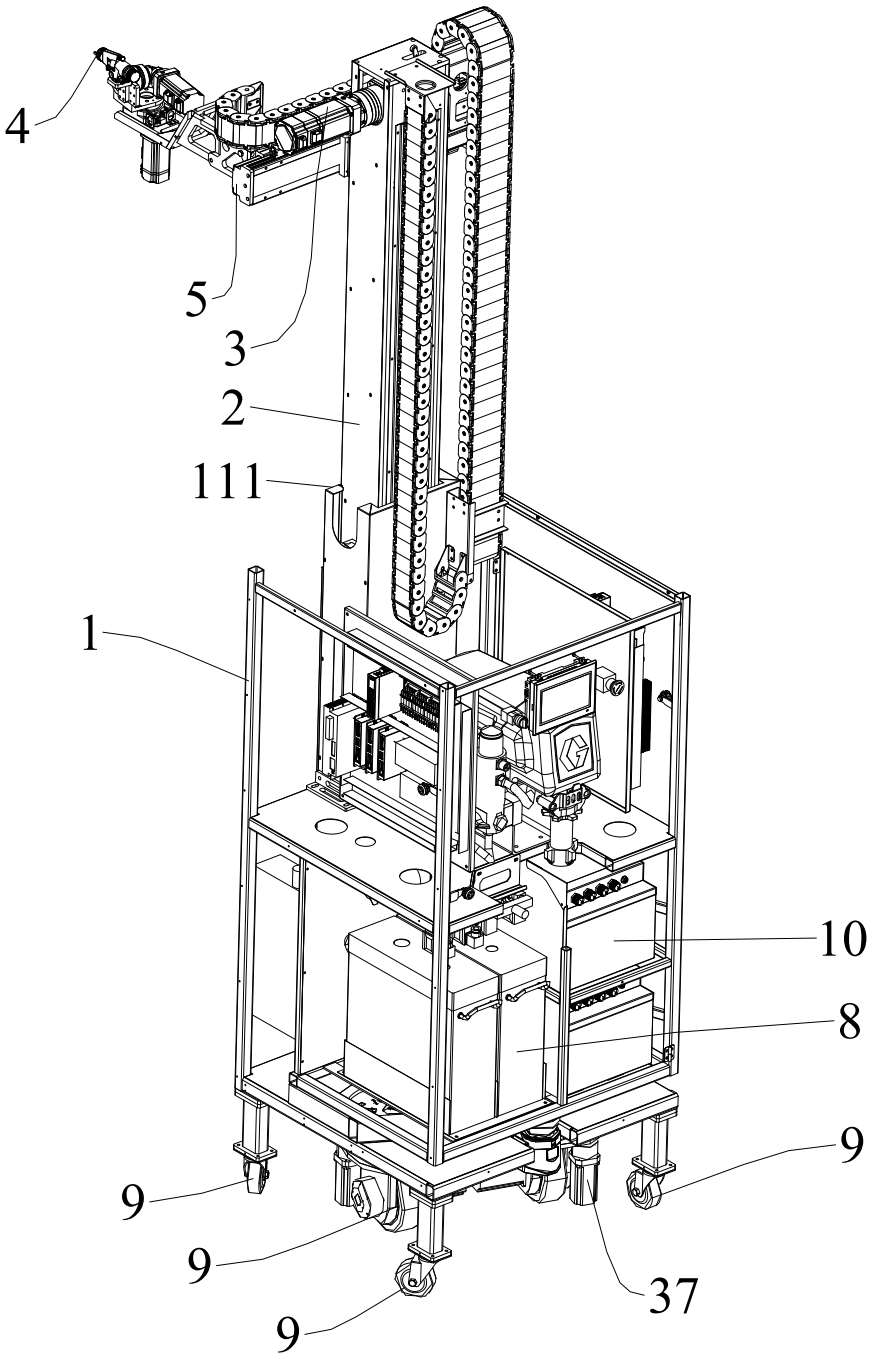

FIG. 7

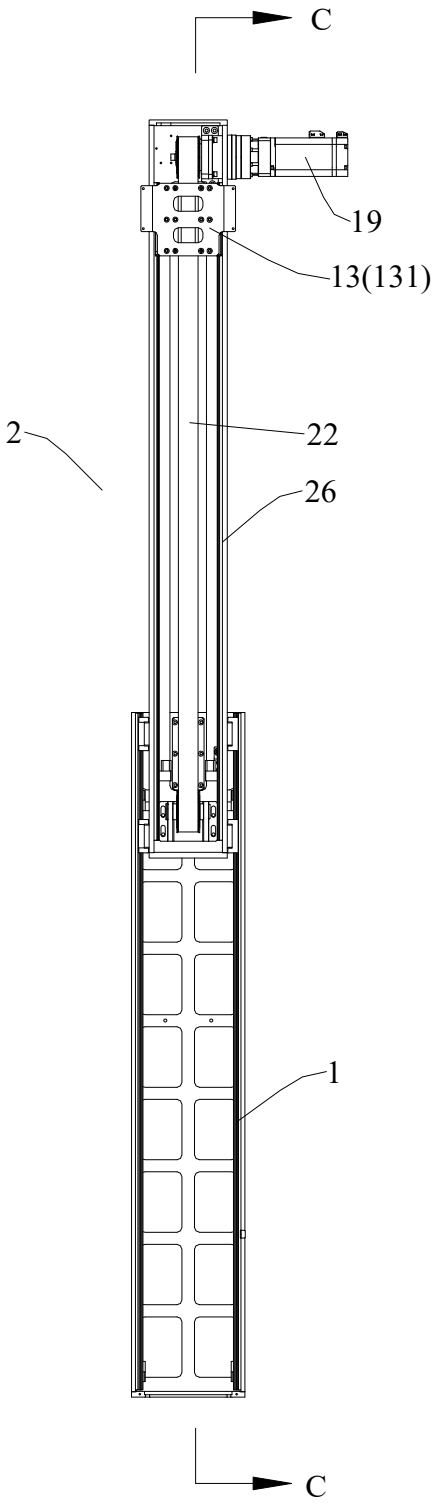

FIG. 8

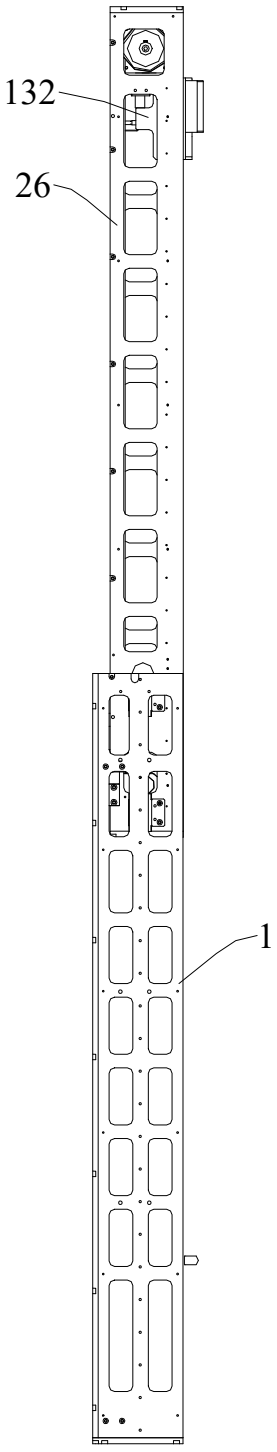

FIG. 9

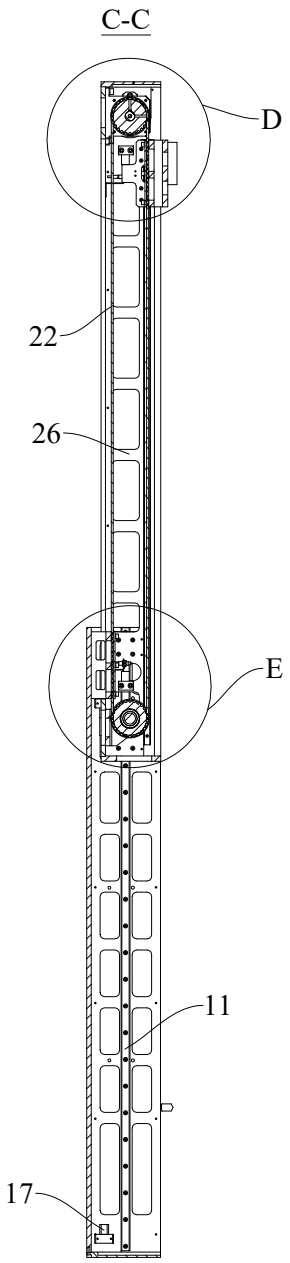

FIG. 10

D-D

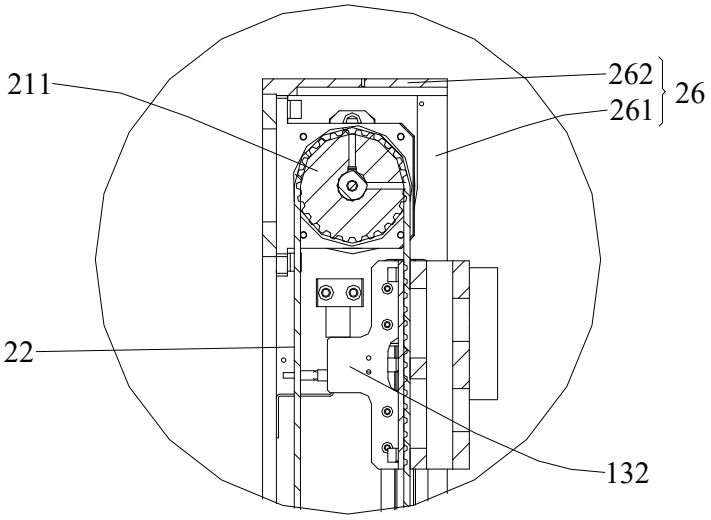

FIG. 11

E-E

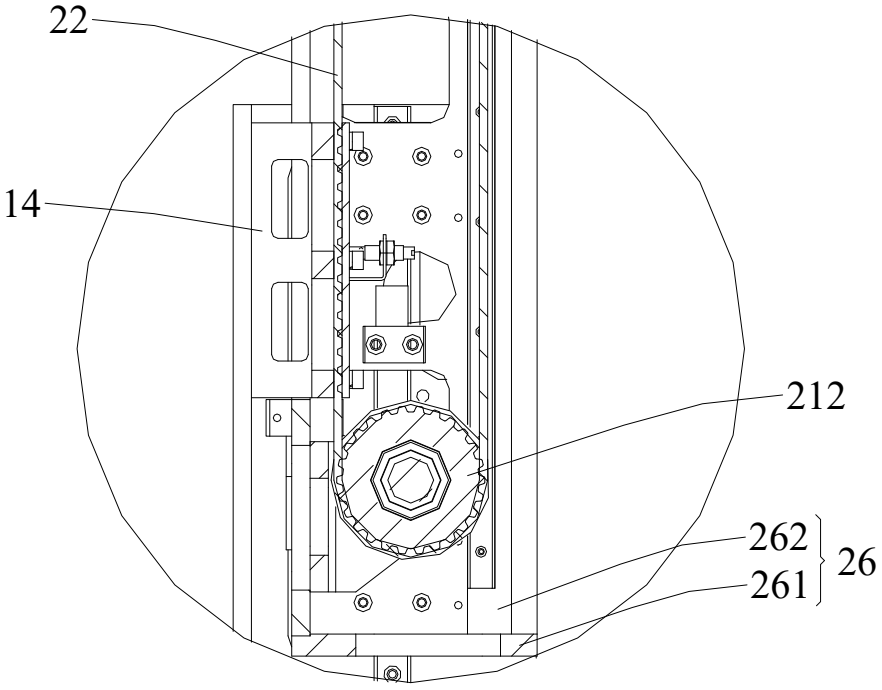

FIG. 12

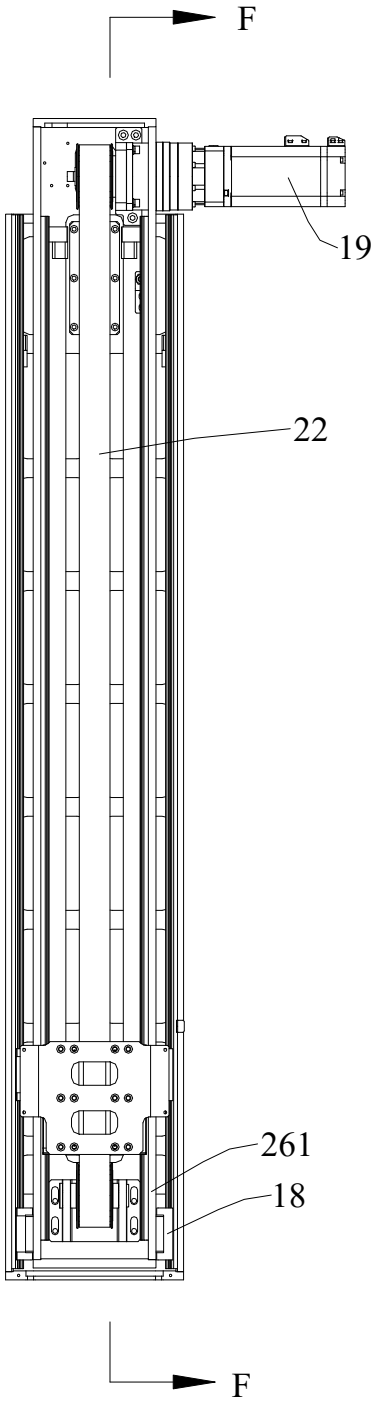

FIG. 13

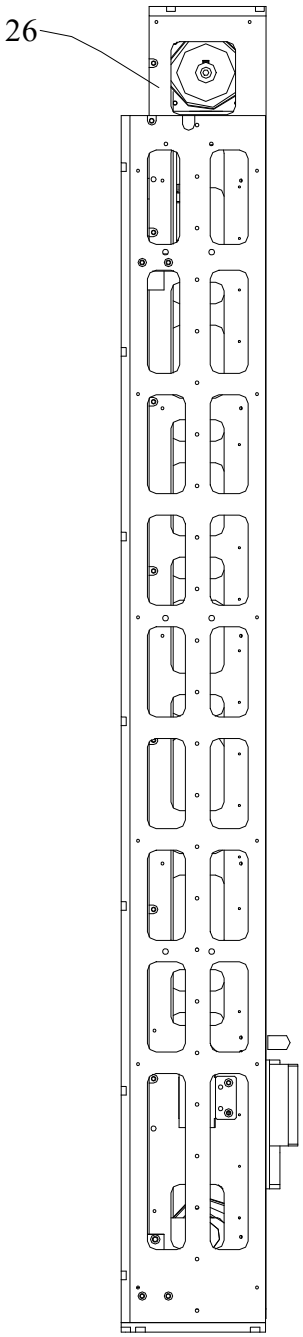

FIG. 14

F-F

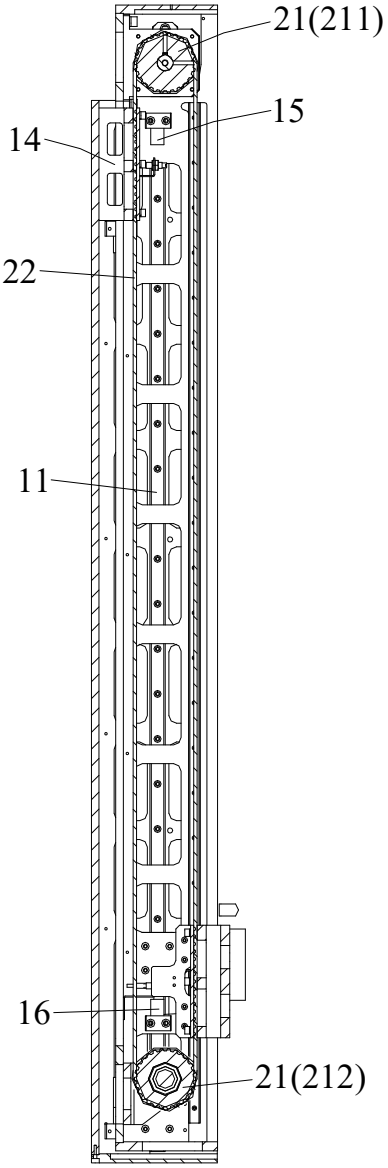

FIG. 15

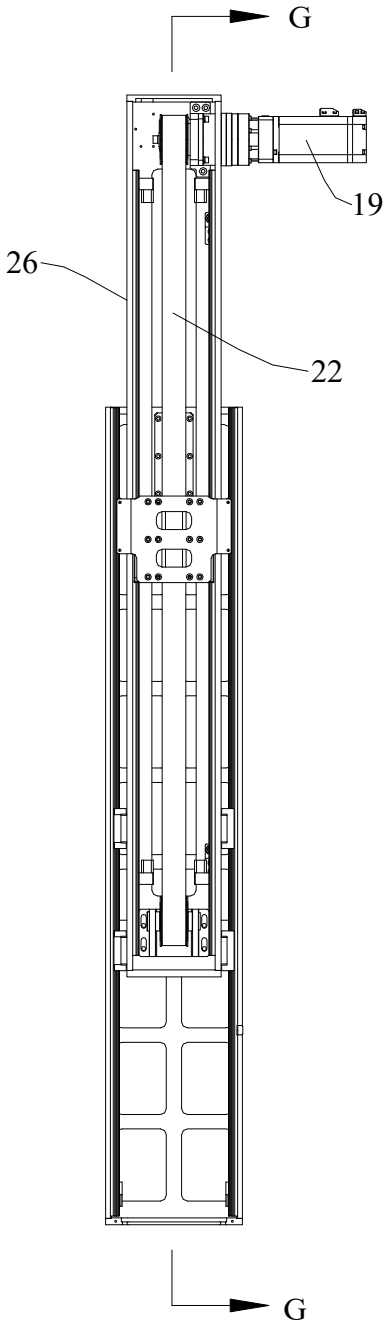

FIG. 16

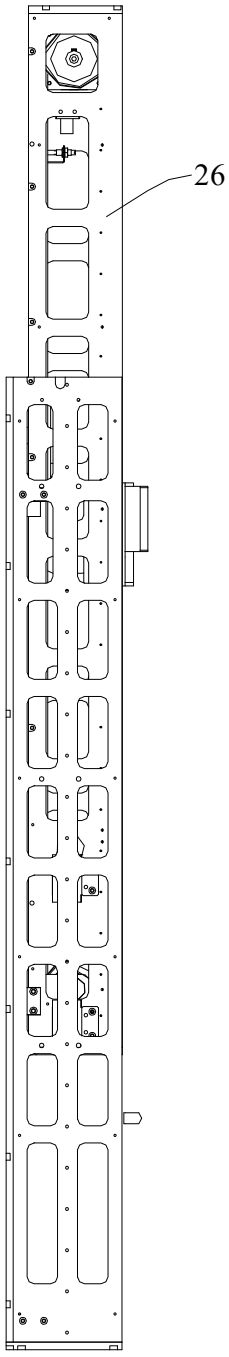

FIG. 17

G-G

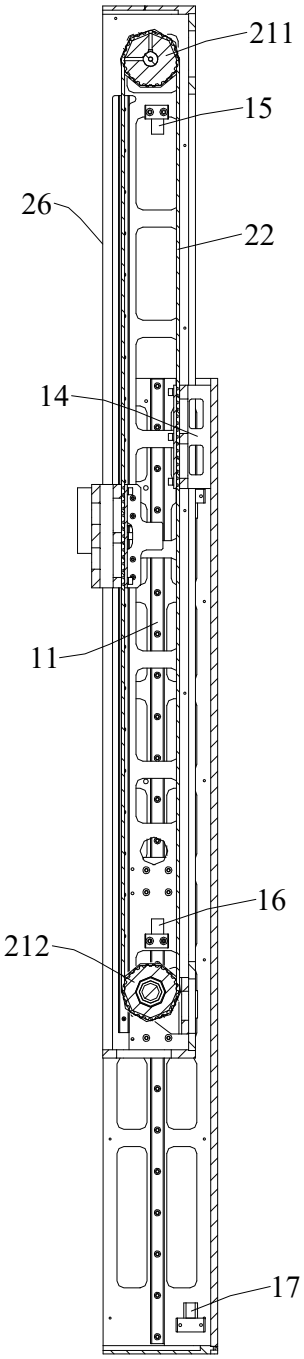

FIG. 18

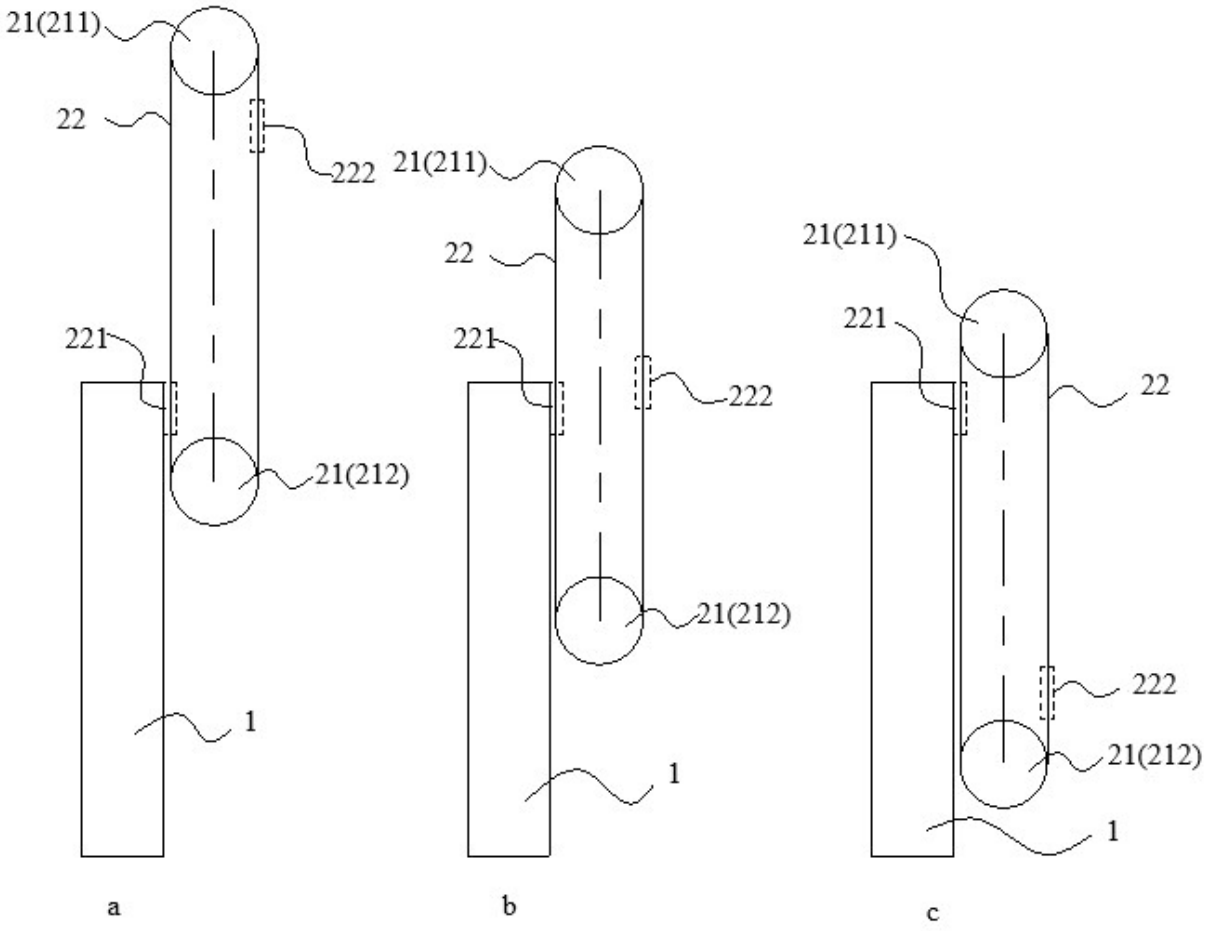
21(211)
22
222
221
21(212)
1
a
21(211)
22
221
222
21(212)
1
b
21(211)
221
22
222
21(212)
1
c

FIG. 19

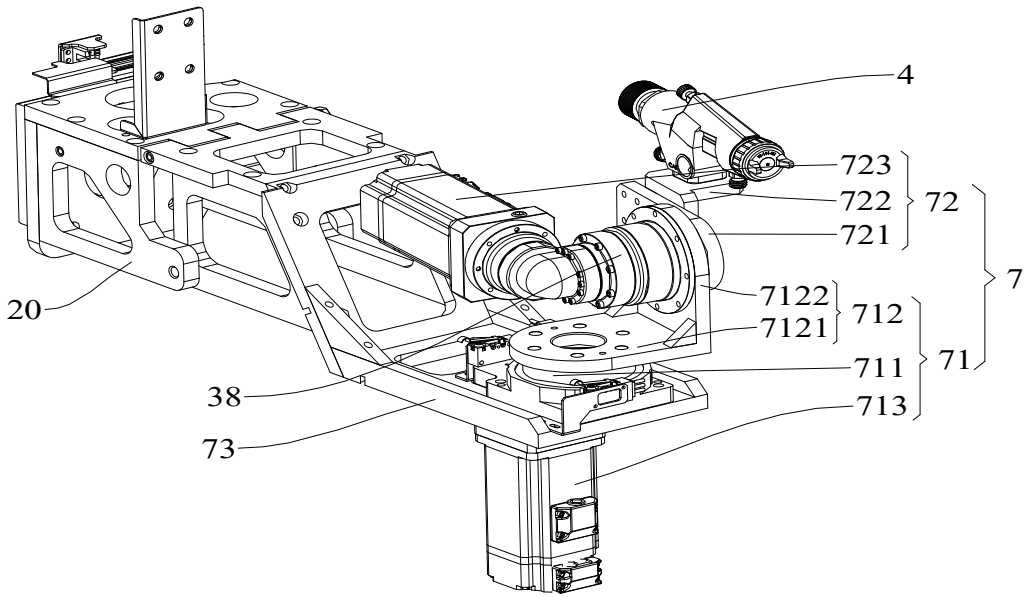
4
723
722
721
72
7
20
7122
7121
712
711
71
38
713
73

FIG. 20

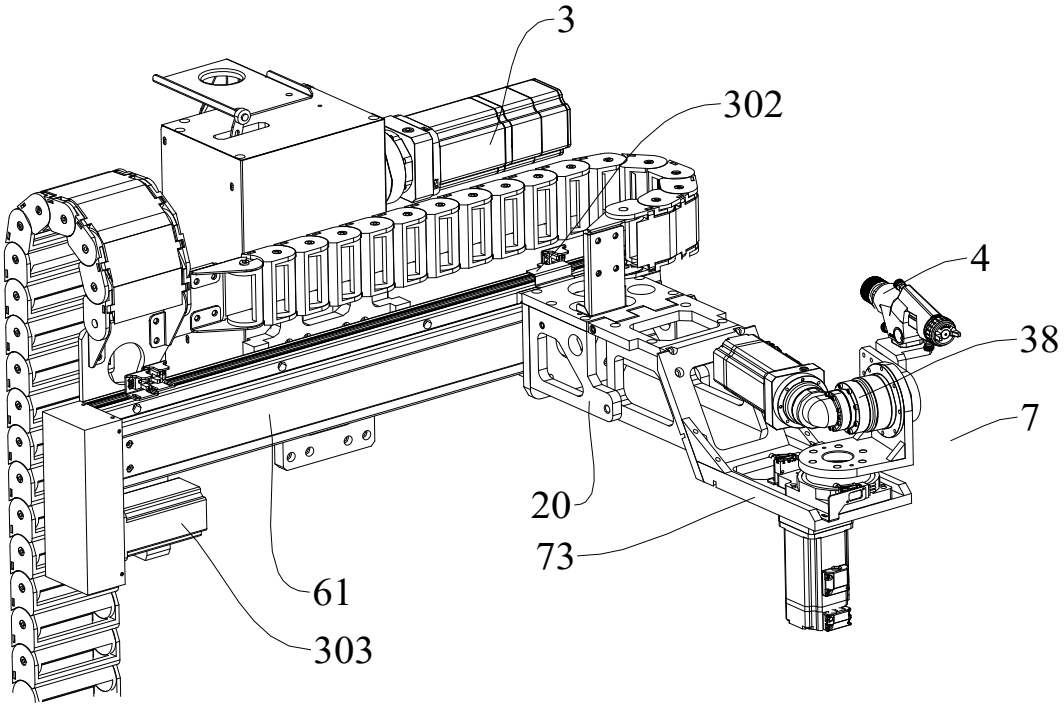
3
302
4
38
7
20
73
61
303

FIG. 21

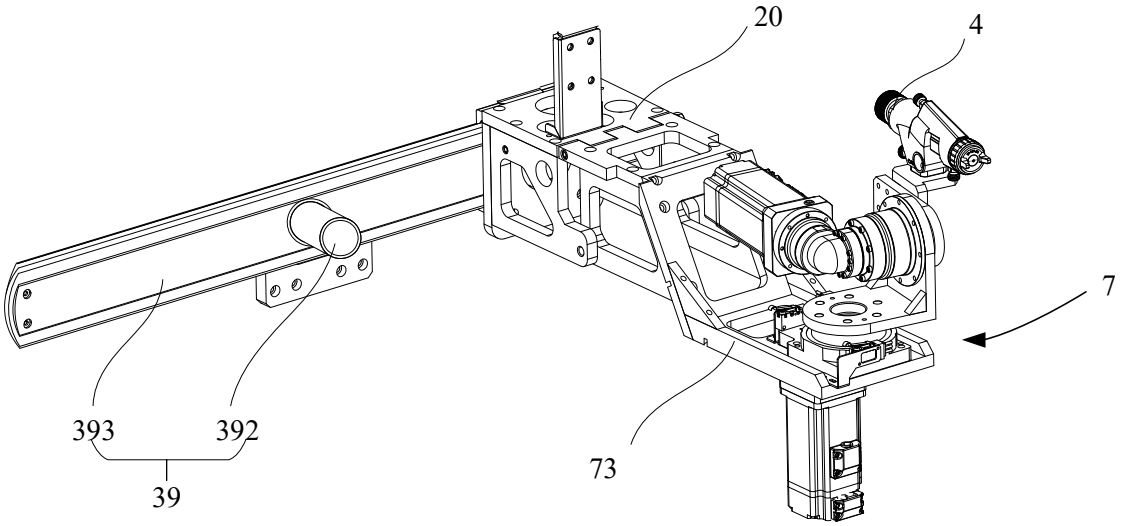
20
4
7
393
392
39
73

FIG. 22

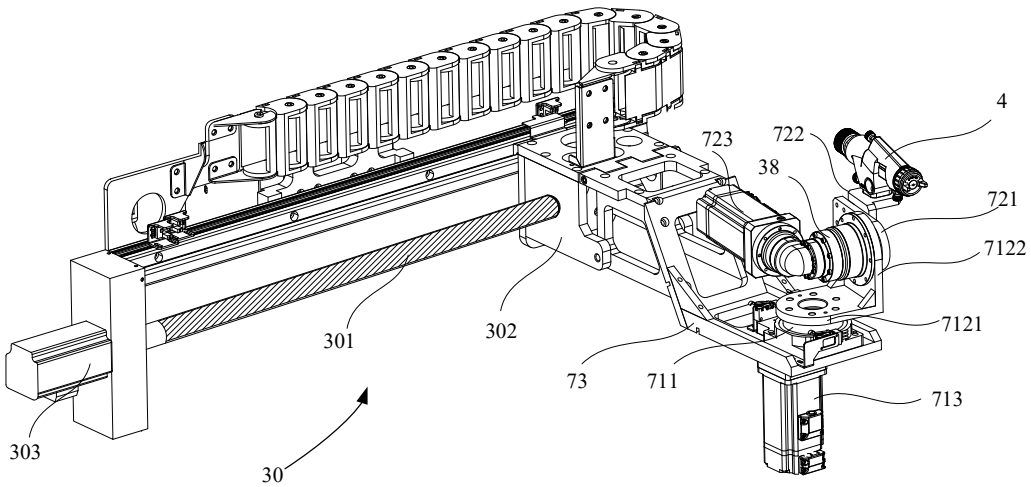
4
722
723
38
721
7122
7121
301
302
73
711
713
303
30

FIG. 23

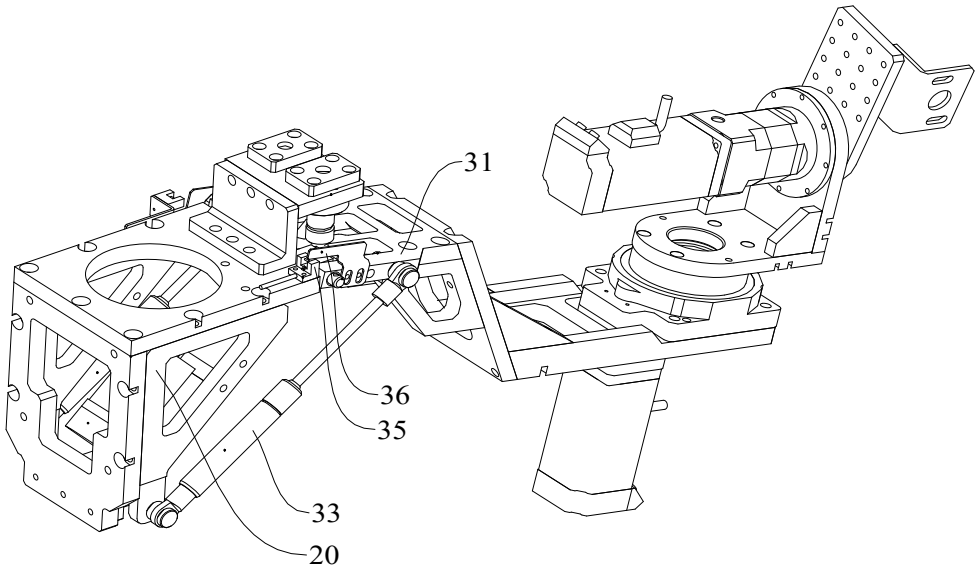

FIG. 24

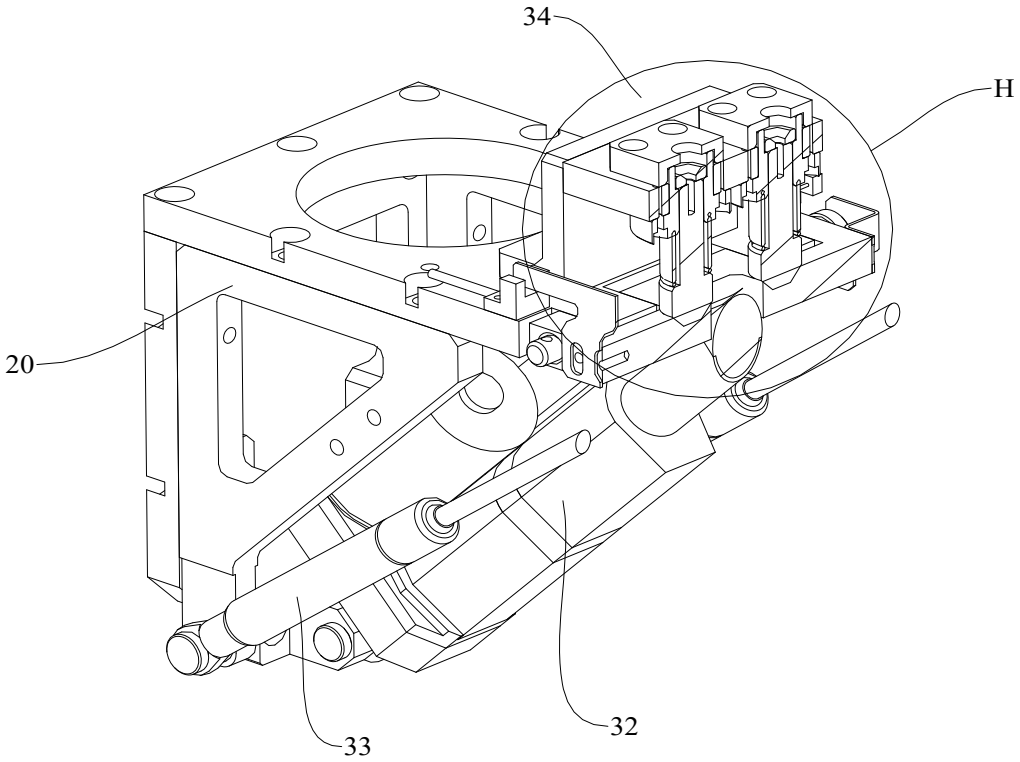

FIG. 25

H-H

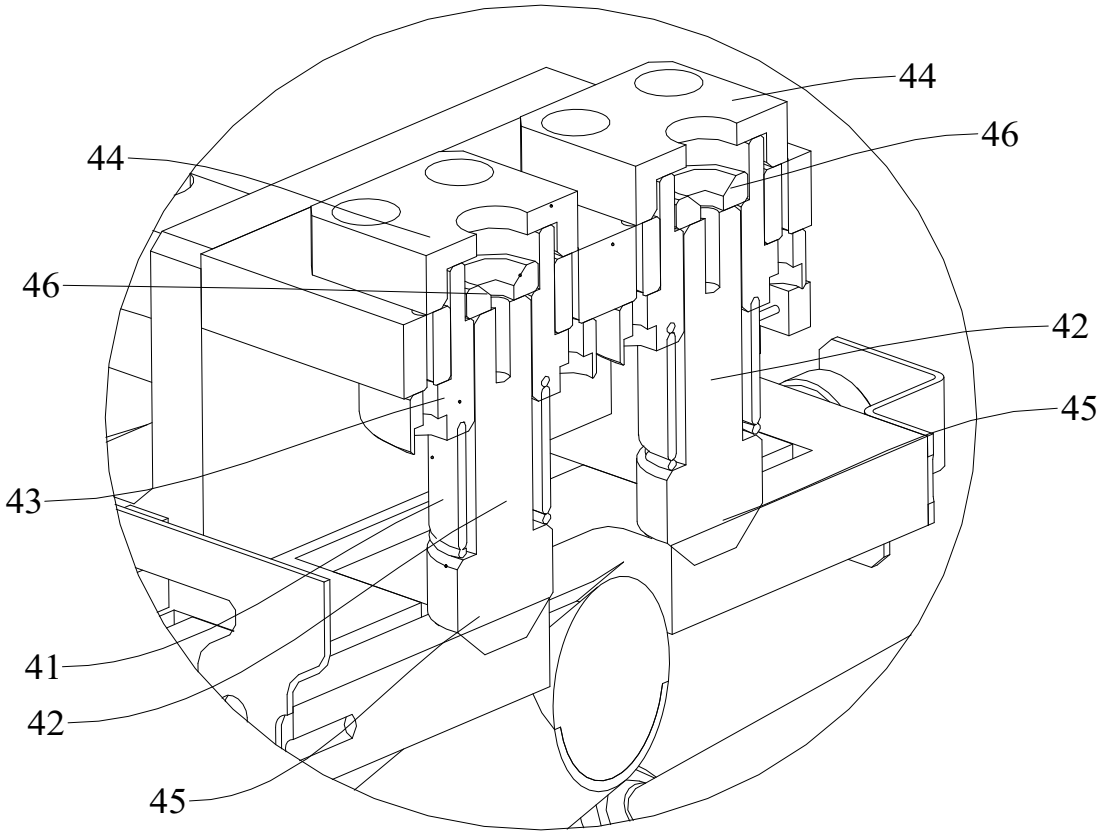

FIG. 26

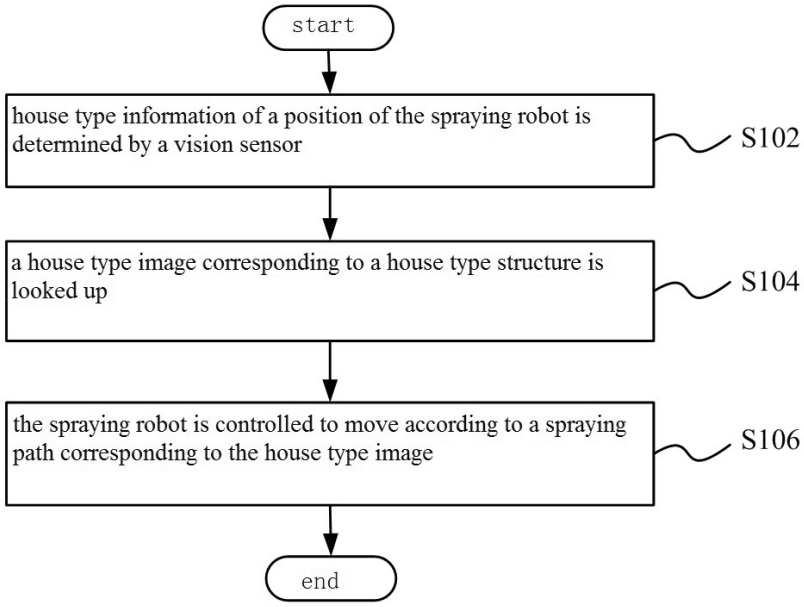
start
house type information of a position of the spraying robot is determined by a vision sensor
S102
a house type image corresponding to a house type structure is looked up
S104
the spraying robot is controlled to move according to a spraying path corresponding to the house type image
S106
end

FIG. 27

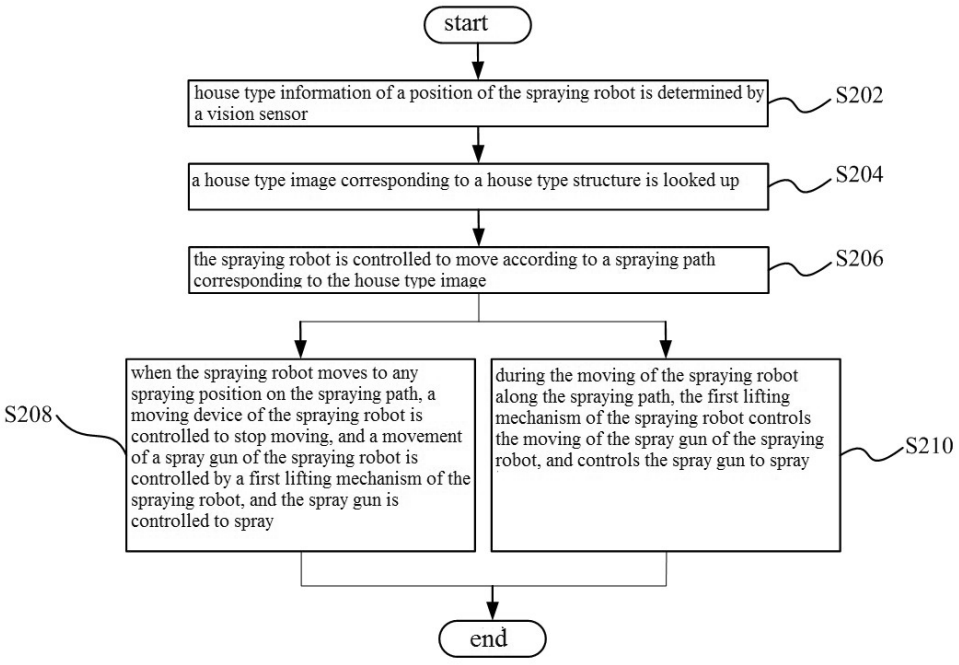
start
house type information of a position of the spraying robot is determined by a vision sensor
S202
a house type image corresponding to a house type structure is looked up
S204
the spraying robot is controlled to move according to a spraying path corresponding to the house type image
S206
when the spraying robot moves to any spraying position on the spraying path, a moving device of the spraying robot is controlled to stop moving, and a movement of a spray gun of the spraying robot is controlled by a first lifting mechanism of the spraying robot, and the spray gun is controlled to spray
S208
during the moving of the spraying robot along the spraying path, the first lifting mechanism of the spraying robot controls the moving of the spray gun of the spraying robot, and controls the spray gun to spray
S210
end

FIG. 28

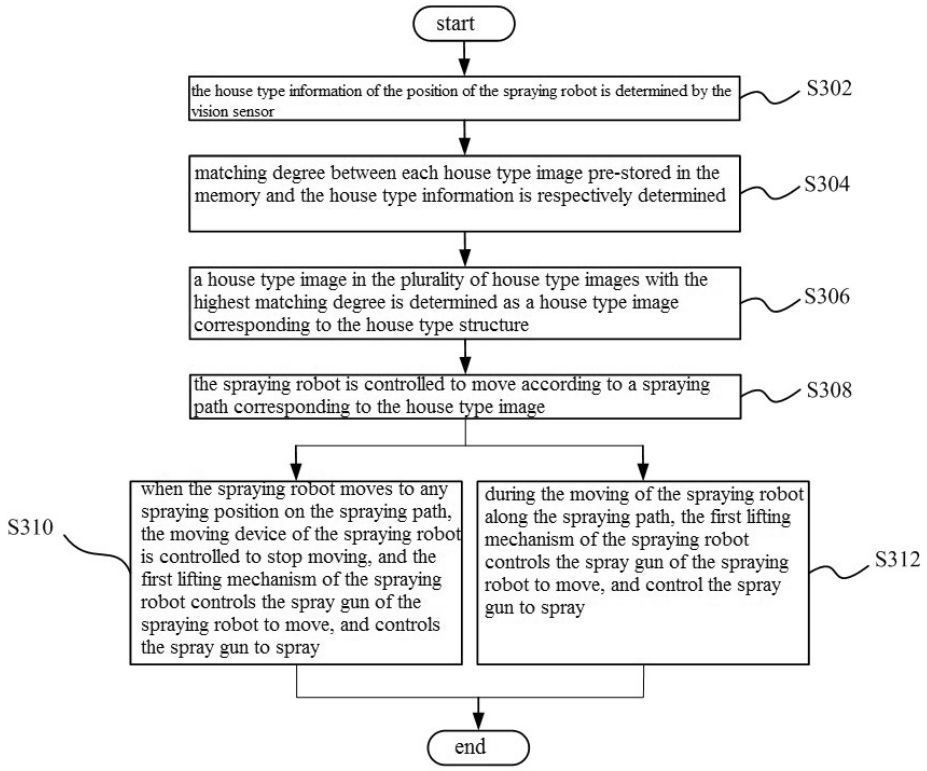
start
the house type information of the position of the spraying robot is determined by the vision sensor
S302
matching degree between each house type image pre-stored in the memory and the house type information is respectively determined
S304
a house type image in the plurality of house type images with the highest matching degree is determined as a house type image corresponding to the house type structure
S306
the spraying robot is controlled to move according to a spraying path corresponding to the house type image
S308
S310
when the spraying robot moves to any spraying position on the spraying path, the moving device of the spraying robot is controlled to stop moving, and the first lifting mechanism of the spraying robot controls the spray gun of the spraying robot to move, and controls the spray gun to spray
during the moving of the spraying robot along the spraying path, the first lifting mechanism of the spraying robot controls the spray gun of the spraying robot to move, and control the spray gun to spray
S312
end

FIG. 29

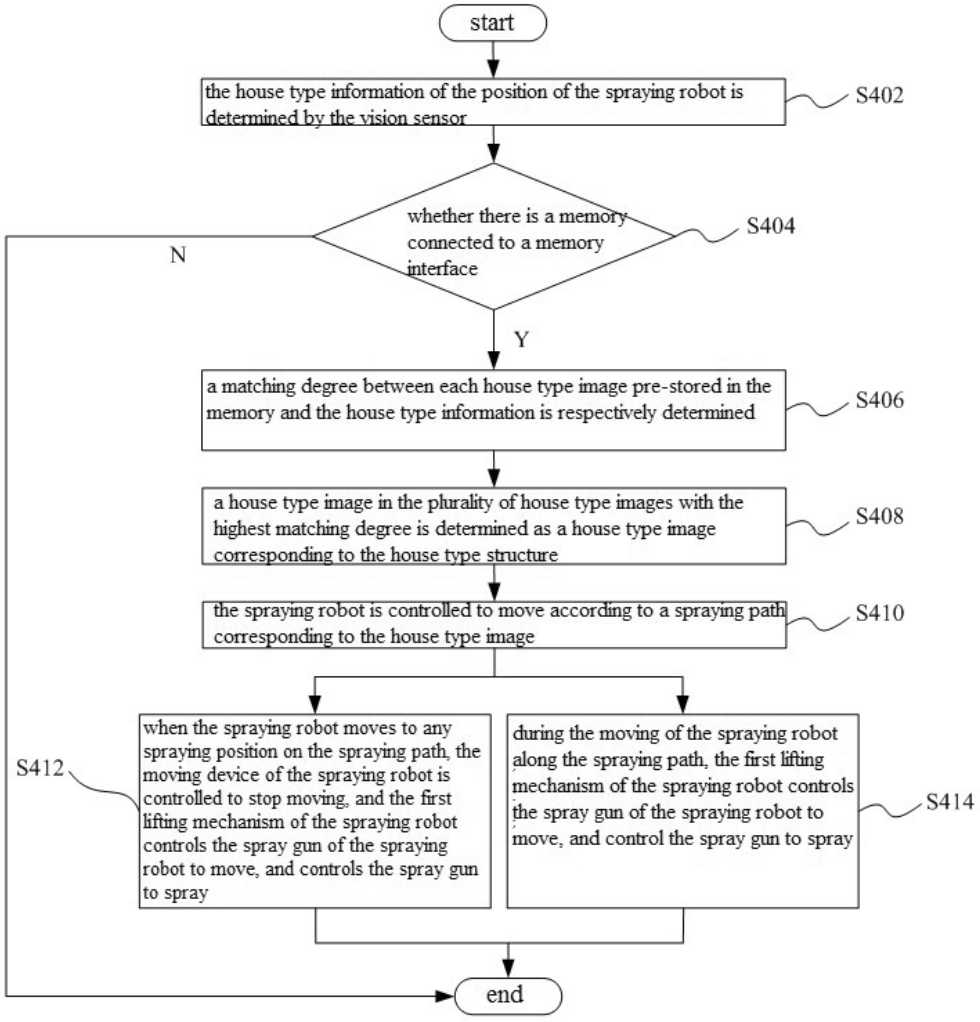
start
the house type information of the position of the spraying robot is determined by the vision sensor
S402
whether there is a memory connected to a memory interface
S404
N
Y
a matching degree between each house type image pre-stored in the memory and the house type information is respectively determined
S406
a house type image in the plurality of house type images with the highest matching degree is determined as a house type image corresponding to the house type structure
S408
the spraying robot is controlled to move according to a spraying path corresponding to the house type image
S410
when the spraying robot moves to any spraying position on the spraying path, the moving device of the spraying robot is controlled to stop moving, and the first lifting mechanism of the spraying robot controls the spray gun of the spraying robot to move, and controls the spray gun to spray
S412
during the moving of the spraying robot along the spraying path, the first lifting mechanism of the spraying robot controls the spray gun of the spraying robot to move, and control the spray gun to spray
S414
end

FIG. 30