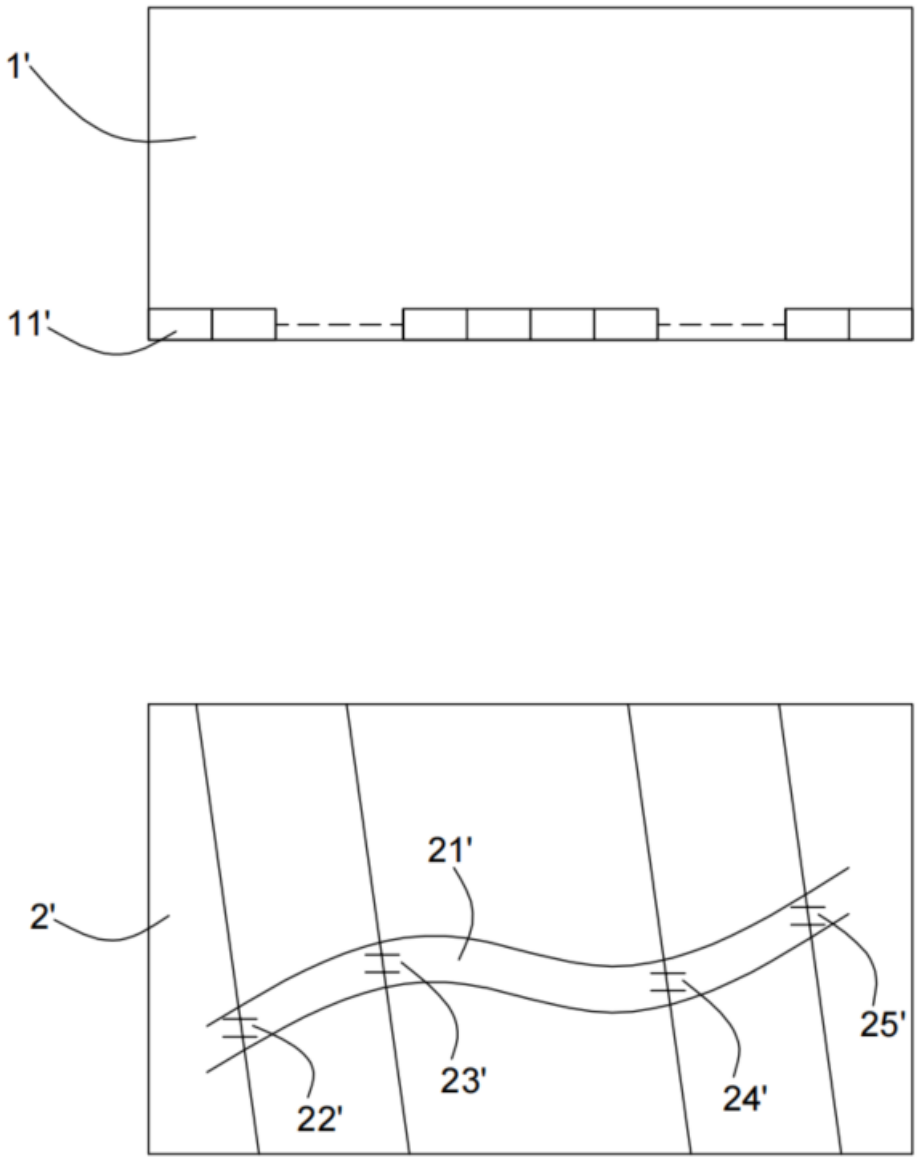

Fig 1

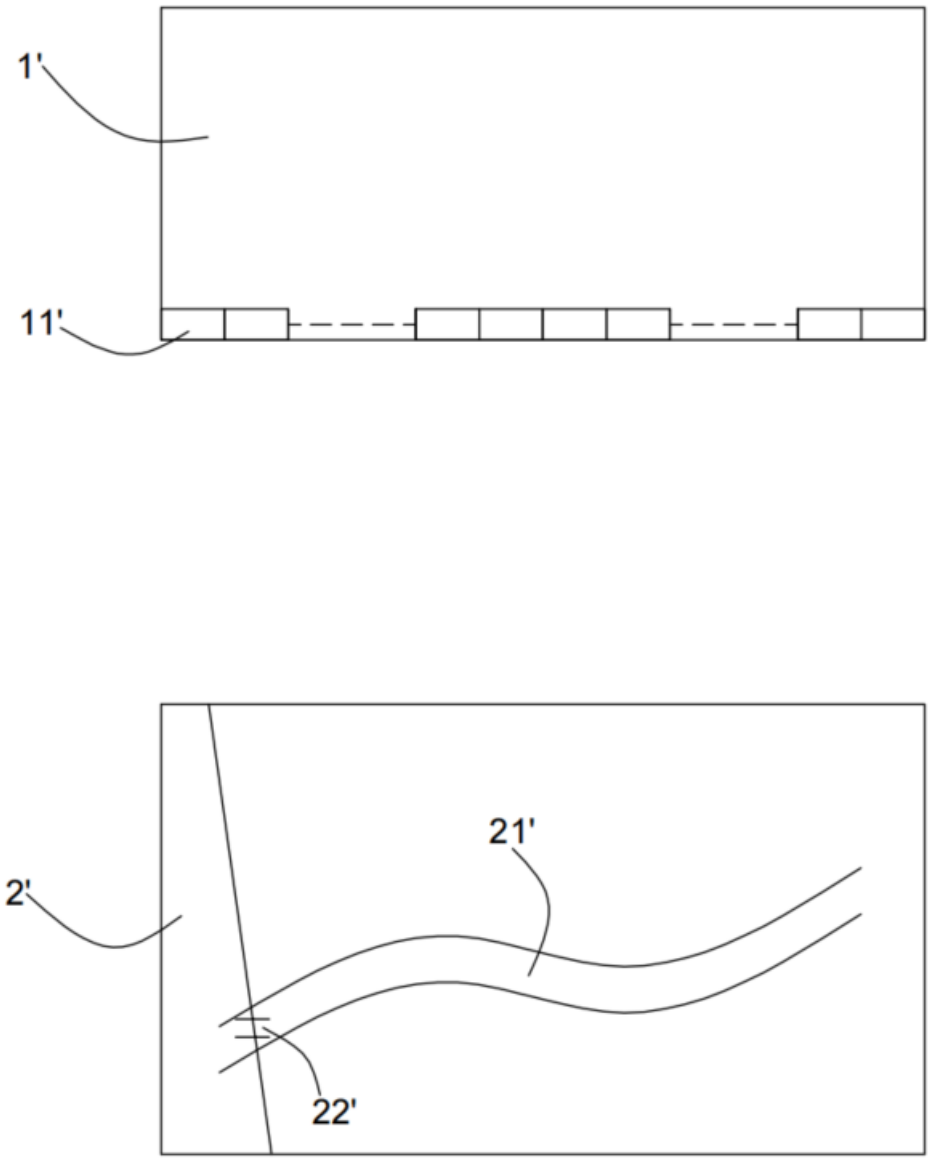

Fig 2

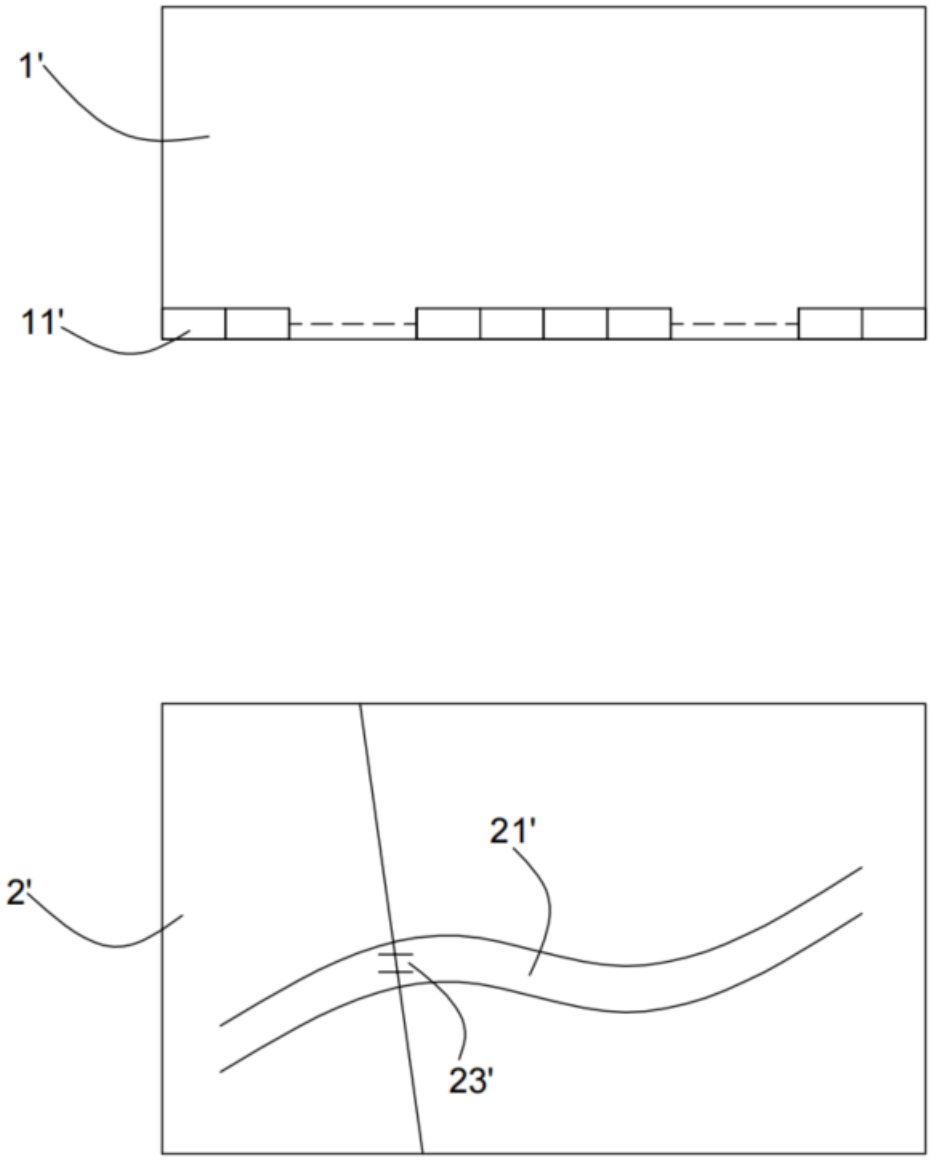

Fig 3

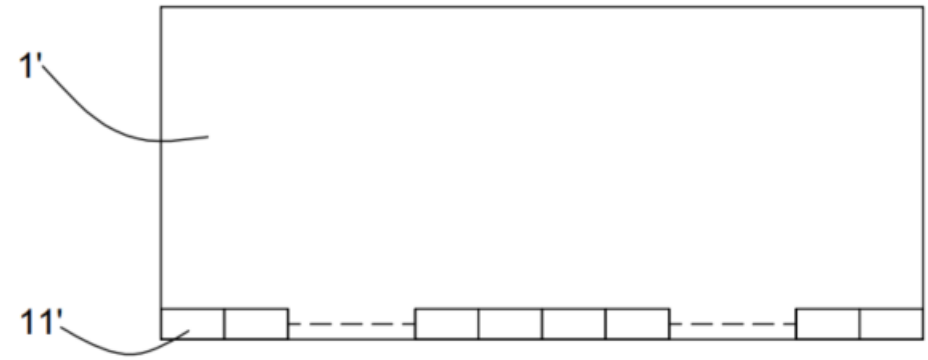

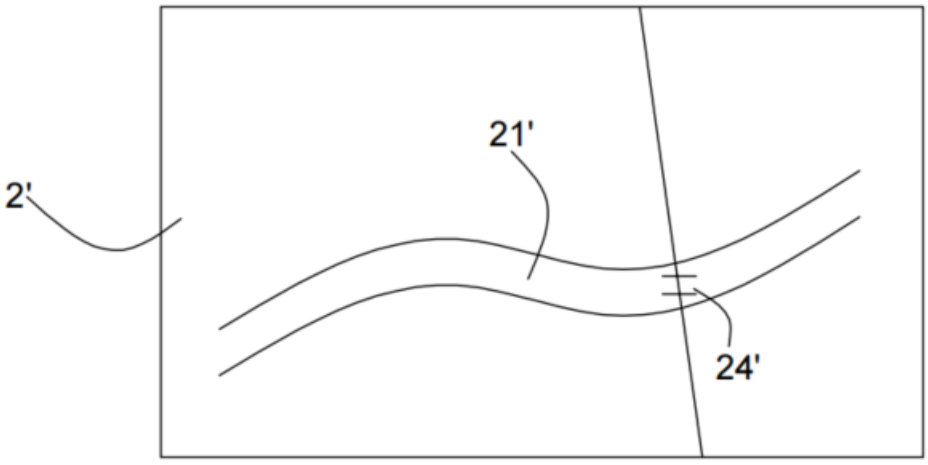

Fig 4

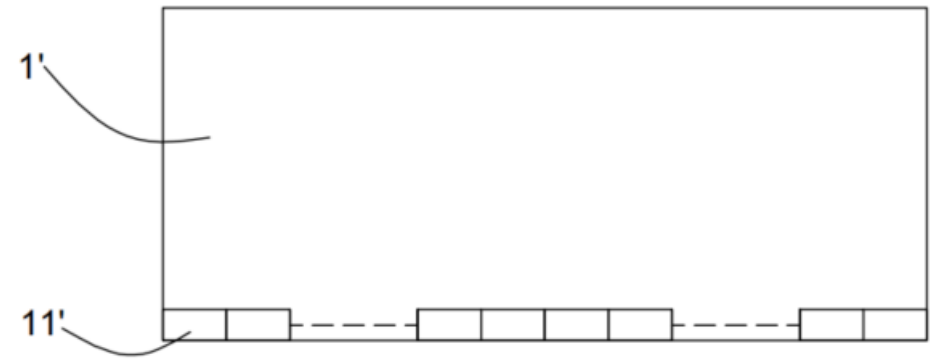

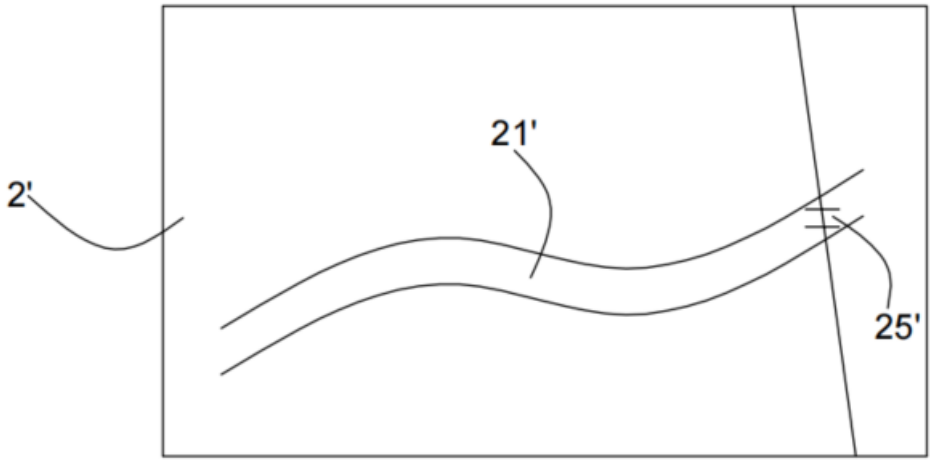

Fig 5

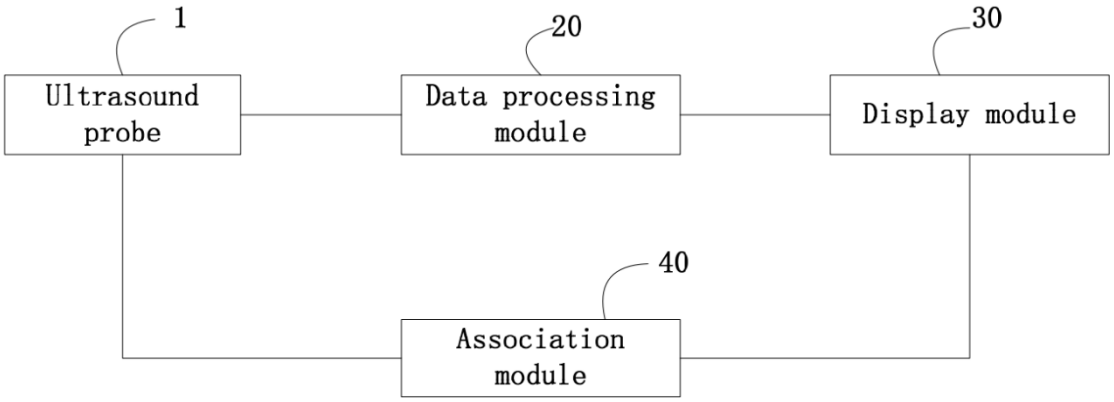
1
20
30
Ultrasound probe
Data processing module
Display module
40
Association module

Fig 6

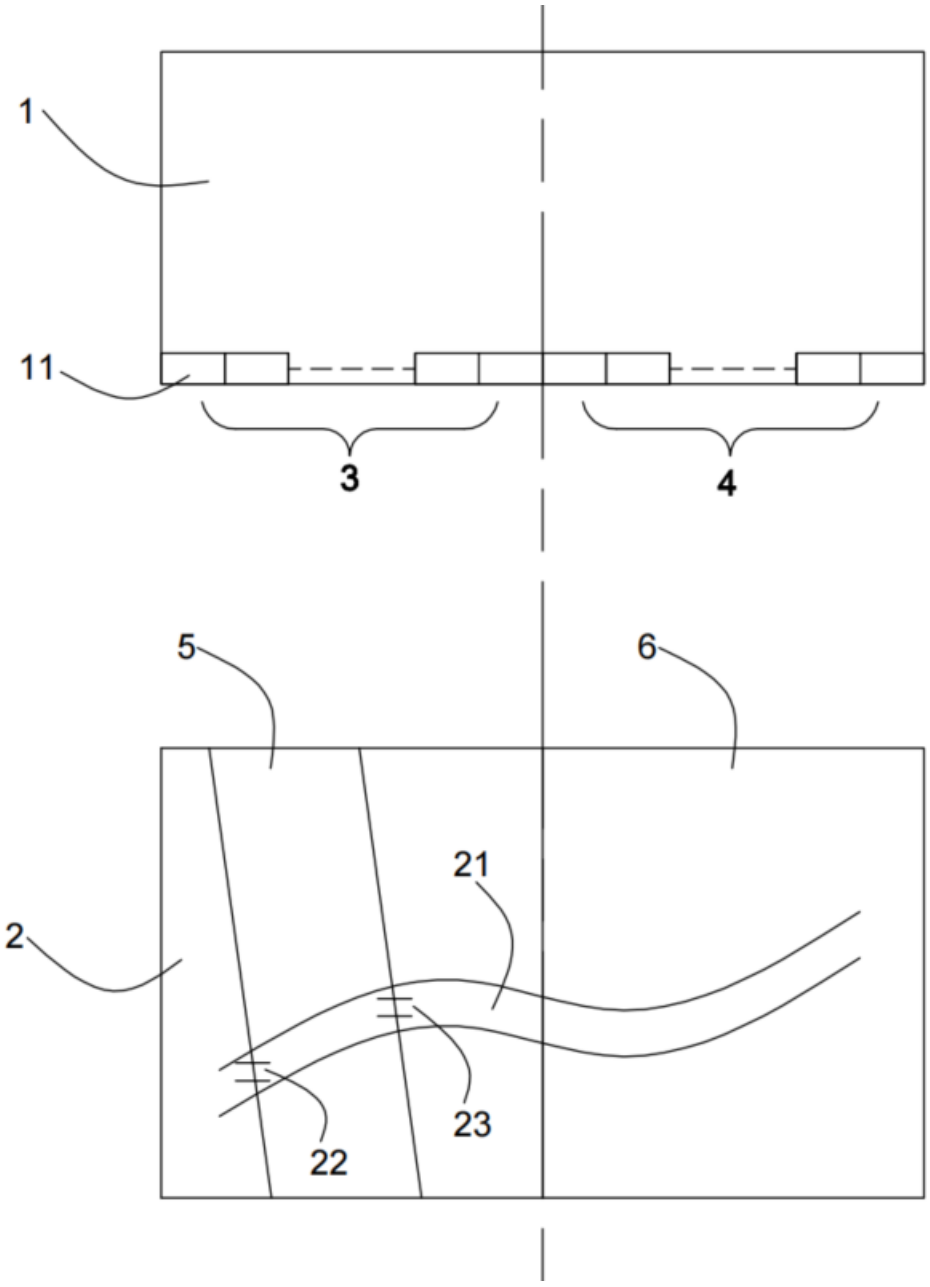

Fig 7

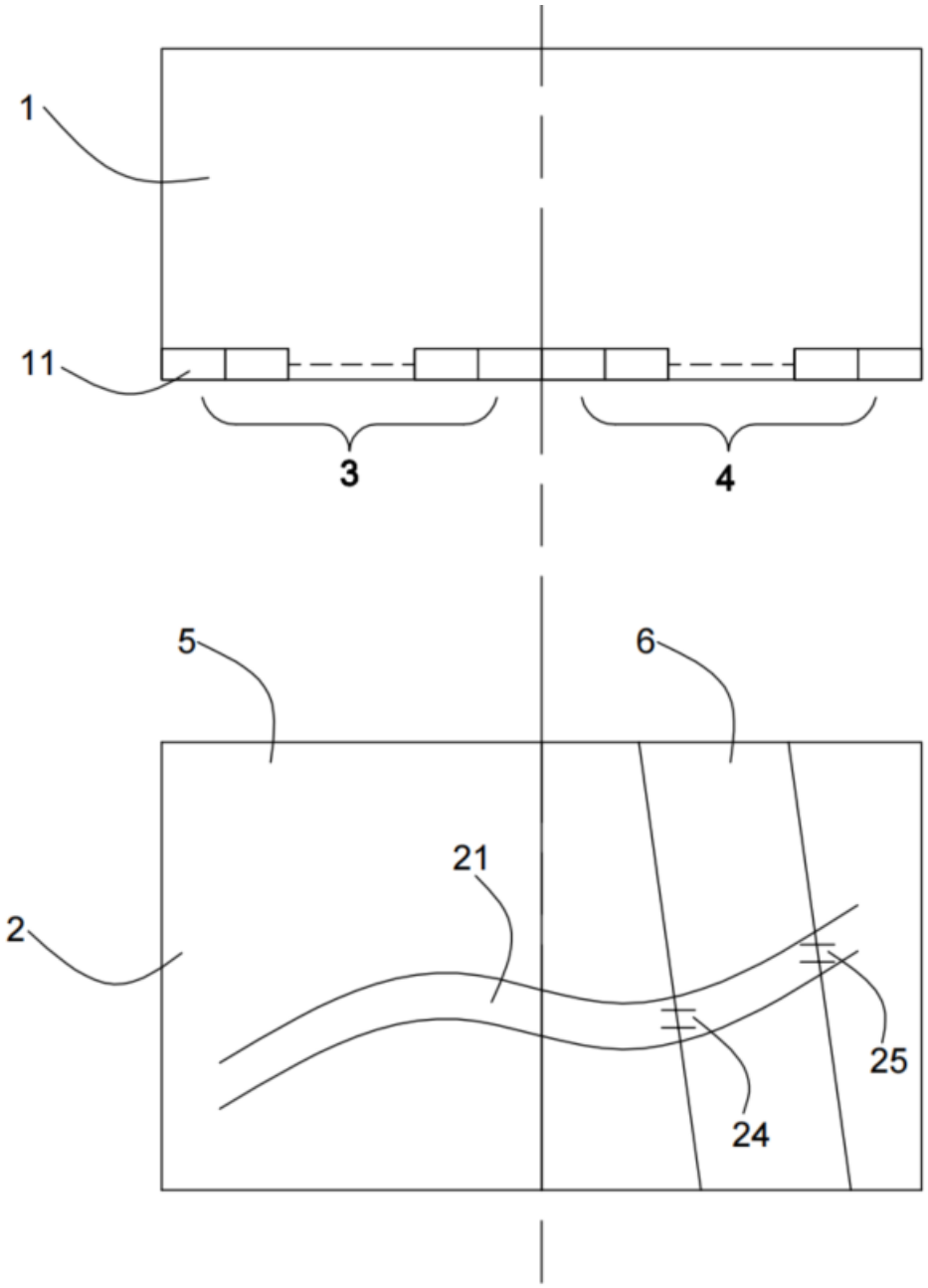

Fig 8

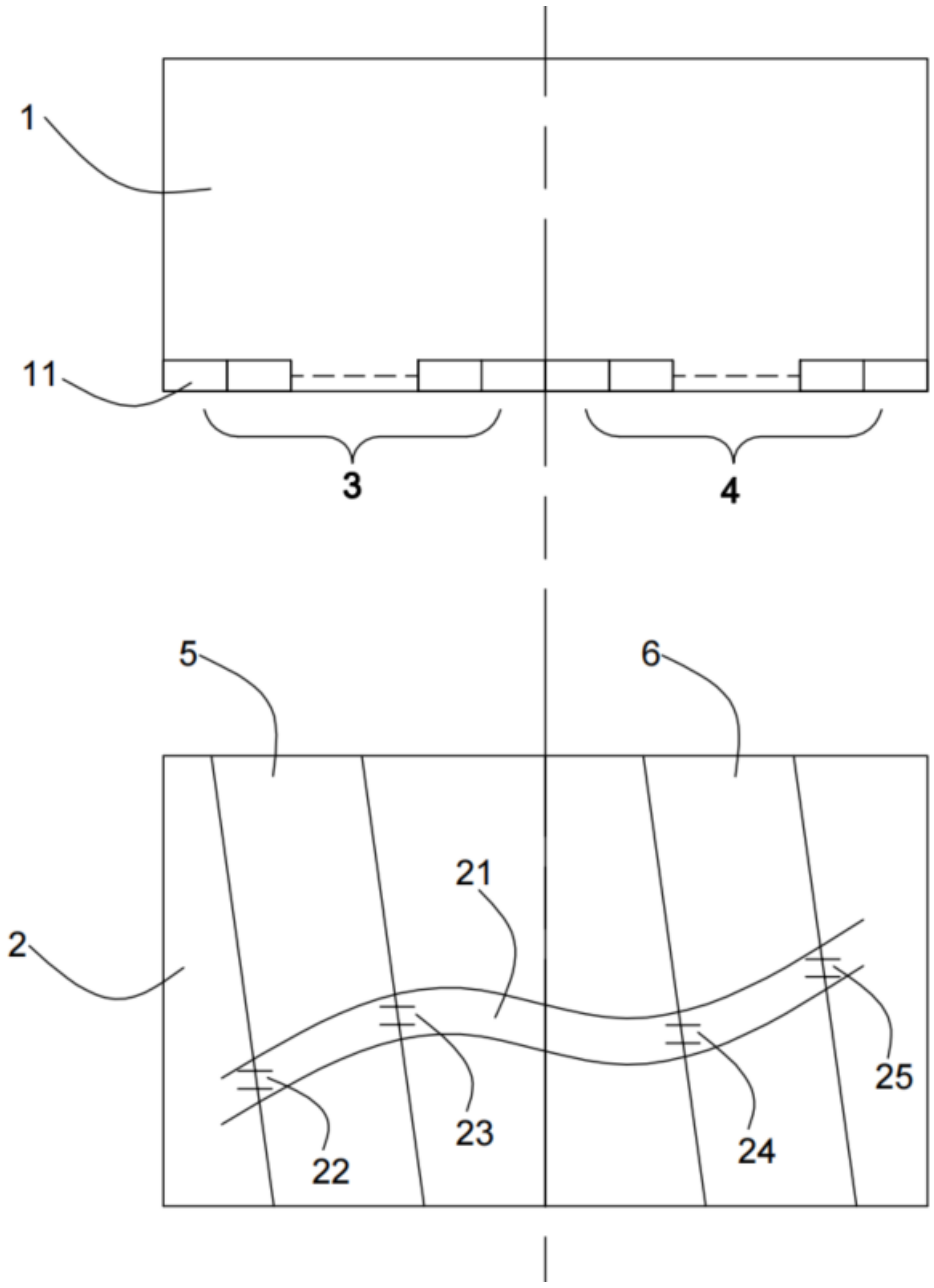

Fig 9

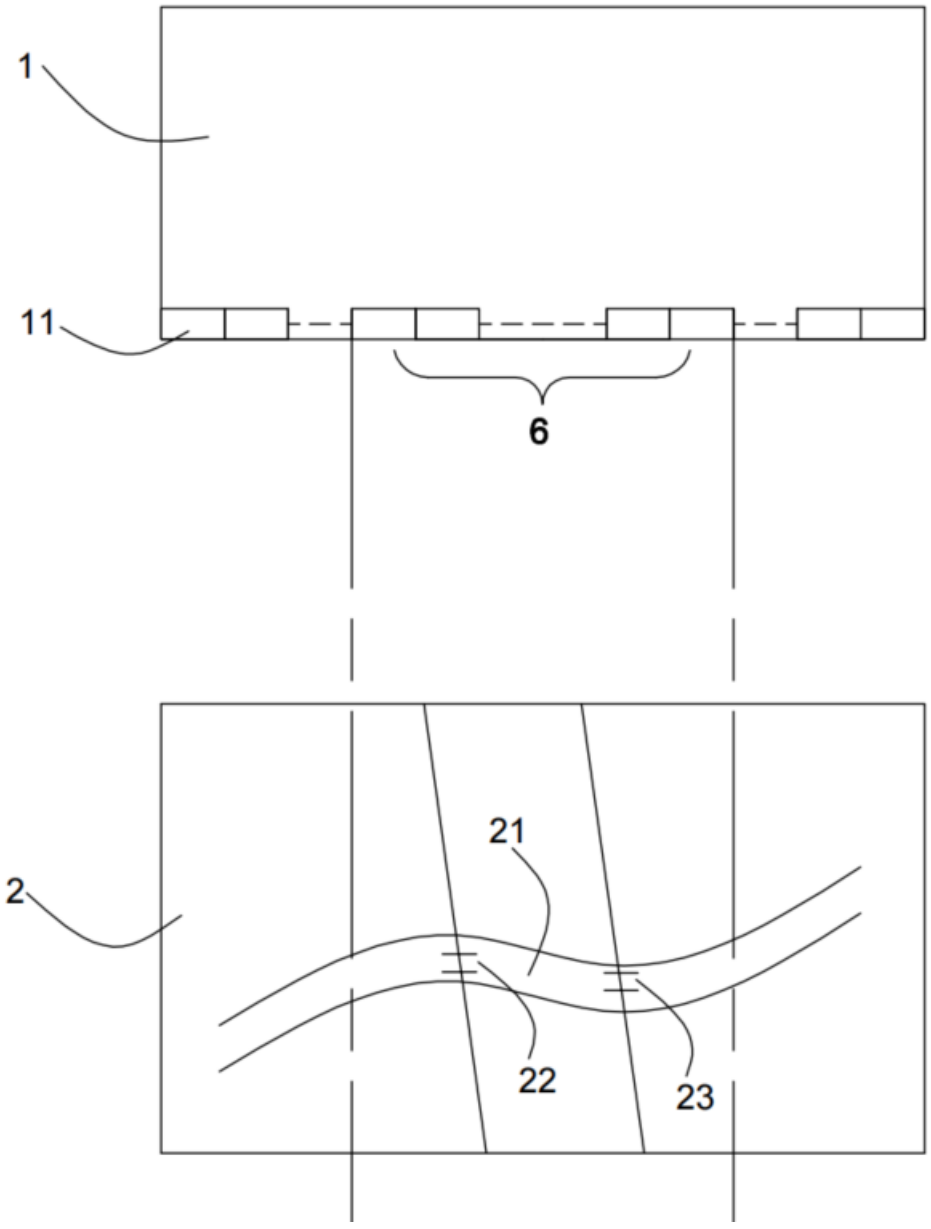

Fig 10