(12) INTERNATIONAL APPLICATION PUBLISHED UNDER THE PATENT COOPERATION TREATY (PCT)

(19) World Intellectual Property Organization
International Bureau

(43) International Publication Date
4 October 2001 (04.10.2001)

PCT

(10) International Publication Number
WO 01/72582 A1

(51) International Patent Classification[7]: B63B 35/00, E02B 17/00

(21) International Application Number: PCT/NL01/00262

(22) International Filing Date: 29 March 2001 (29.03.2001)

(25) Filing Language: English

(26) Publication Language: English

(30) Priority Data:
1014786 29 March 2000 (29.03.2000) NL

(71) Applicant *(for all designated States except US)*: **EXCALIBUR ENGINEERING B.V.** [NL/NL]; Poortweg 14, NL-2612 PA Delft (NL).

(72) Inventors; and

(75) Inventors/Applicants *(for US only)*: **STEENHUIS, André, Luur, Jan** [NL/NL]; Senegalhof 62, NL-2622 CN Delft (NL). **SCHENKEL, Martin, Arie** [NL/NL]; Klaver 4, NL-3155 WG Maasland (NL).

(74) Agent: **HOORWEG, Petrus, Nicolaas**; Arnold & Siedsma, Sweelinckplein 1, NL-2517 GK The Hague (NL).

(81) Designated States *(national)*: AE, AG, AL, AM, AT, AU, AZ, BA, BB, BG, BR, BY, BZ, CA, CH, CN, CR, CU, CZ, DE, DK, DM, DZ, EE, ES, FI, GB, GD, GE, GH, GM, HR, HU, ID, IL, IN, IS, JP, KE, KG, KP, KR, KZ, LC, LK, LR, LS, LT, LU, LV, MA, MD, MG, MK, MN, MW, MX, MZ, NO, NZ, PL, PT, RO, RU, SD, SE, SG, SI, SK, SL, TJ, TM, TR, TT, TZ, UA, UG, US, UZ, VN, YU, ZA, ZW.

(84) Designated States *(regional)*: ARIPO patent (GH, GM, KE, LS, MW, MZ, SD, SL, SZ, TZ, UG, ZW), Eurasian patent (AM, AZ, BY, KG, KZ, MD, RU, TJ, TM), European patent (AT, BE, CH, CY, DE, DK, ES, FI, FR, GB, GR, IE, IT, LU, MC, NL, PT, SE, TR), OAPI patent (BF, BJ, CF, CG, CI, CM, GA, GN, GW, ML, MR, NE, SN, TD, TG).

Published:
— *with international search report*

For two-letter codes and other abbreviations, refer to the "Guidance Notes on Codes and Abbreviations" appearing at the beginning of each regular issue of the PCT Gazette.

(54) **Title:** DEVICE FOR LIFTING A SEAGOING CONSTRUCTION SUCH AS A DRILLING RIG, PROVIDED WITH LIFTING MEMBERS RUNNING MUTUALLY PARALLEL

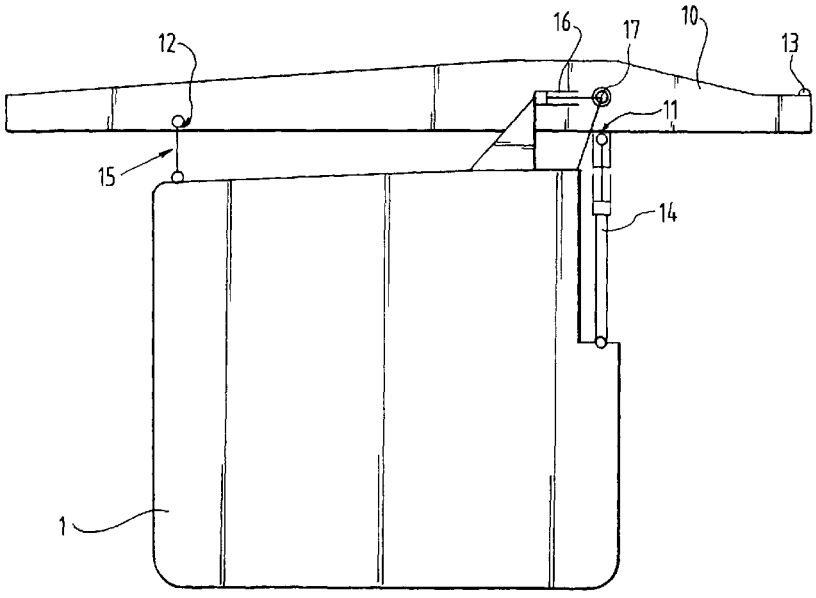

(57) **Abstract:** A device for lifting a seagoing construction such as a drilling rig, which device comprises one or more floater bodies (1), one or more beam-like lifting members (10) supported movably on a floater body and running parallel or practically parallel to each other, wherein the or each lifting member (10) is supported on at least two support points (11, 12) of the floater body, at least one of which is adjustable in height direction, and the end part of the lifting member (10) lying outside the floater body (1) has a pressure point (13) which is in contact with the construction for lifting, this such that the seagoing construction can be easily connected to the end of the lifting member (10) without this construction suffering damage as a result of the sea swell.

WO 01/72582 A1