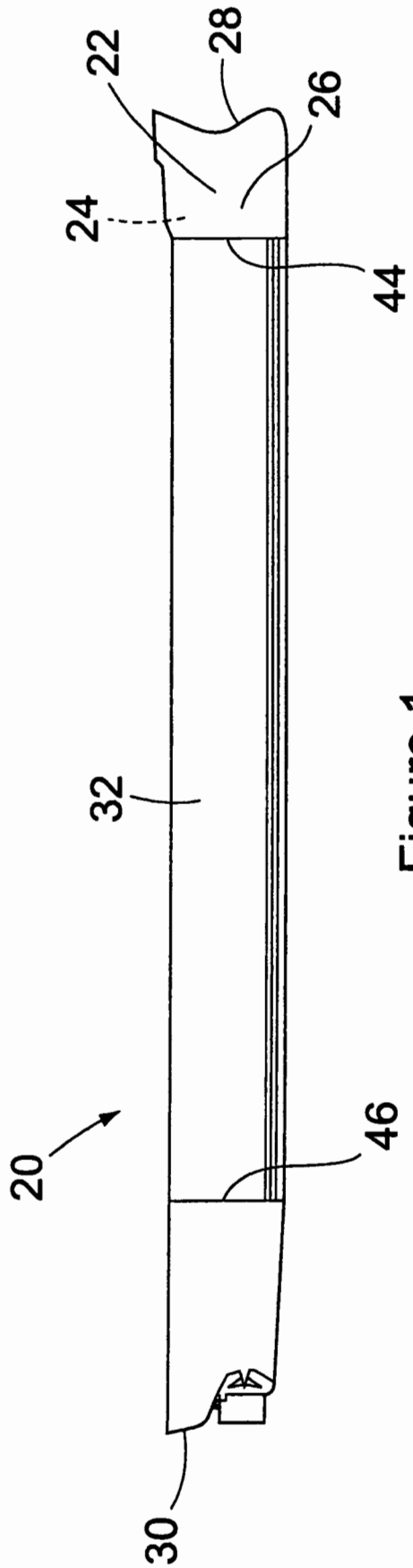

Figure 1

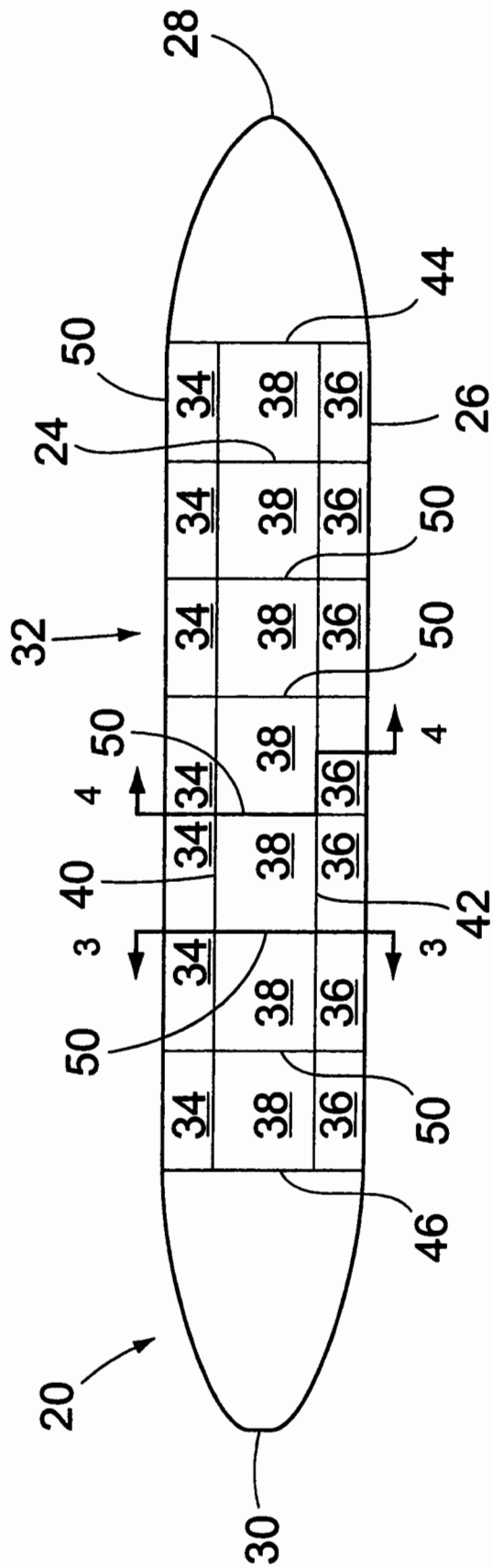

Figure 2

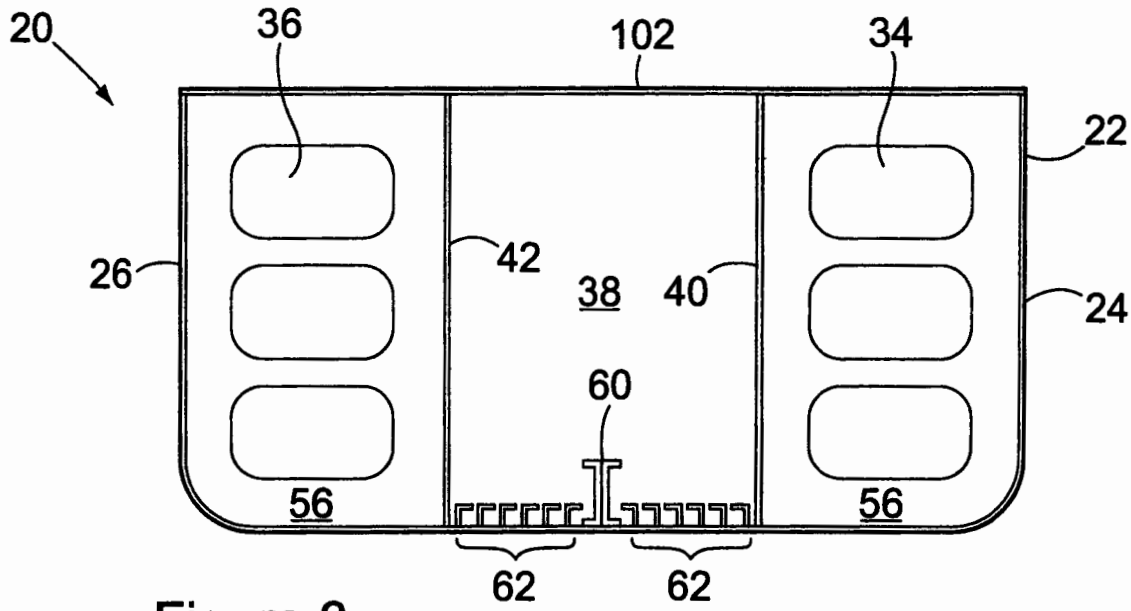

Figure 3

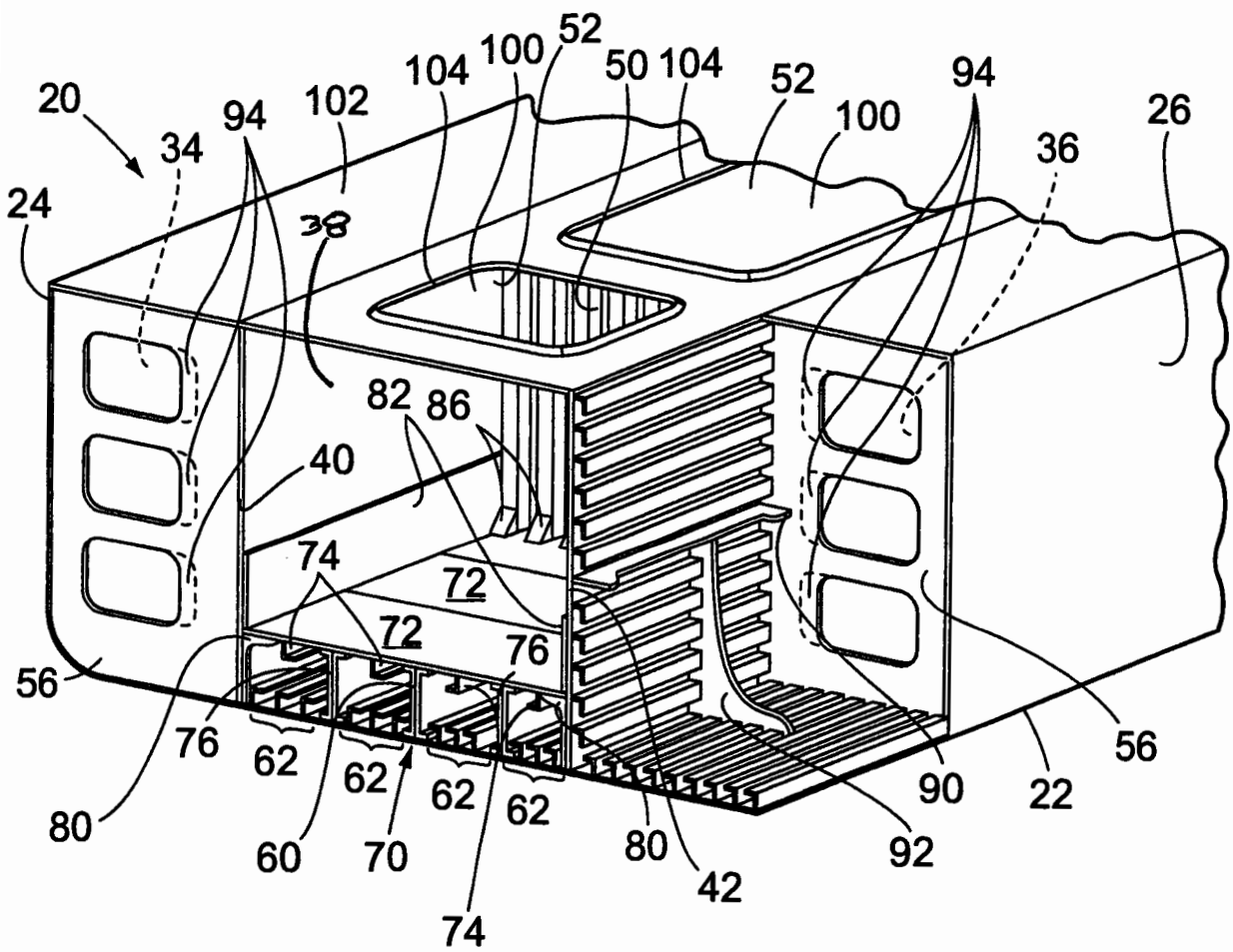

Figure 4

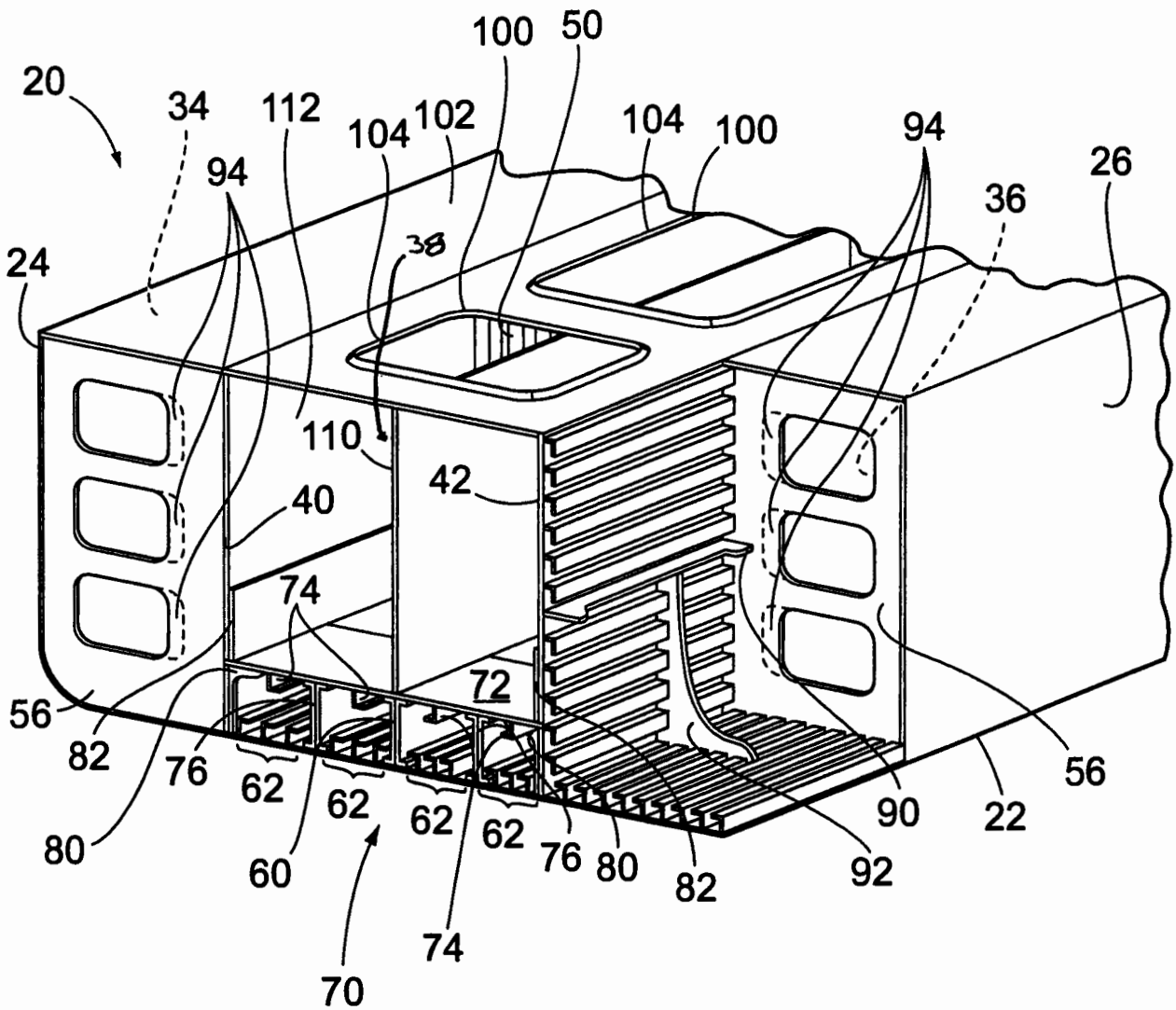
20
34
112
104
102
100
50
104
100
94
26
36
94
24
38
110
42
40
74
72
56
82
76
62
62
62
62
76
80
82
92
90
22
56
80
60
74
70

Figure 5