INTELLECTUAL PROPERTY OFFICE OF SINGAPORE APPLICATION

HSP EL CLIP 16

ABSTRACT

The disclosed HSP EL CLIP 16 is a co-development product between HONSEN PRINTING Industries Pte Ltd and McTEX (S) Pte Ltd. This EL Clip is manufactured by injection moulding process using ABS material. HSP stands for HONSEN PRINTING, EL stands for ELECTRO LUMINESCENT and 16 stands for 2016 where the year this invention was started. This EL Clip is invented to provide a connection between an EL Panel and EL Inverter. A Top plate (26a) and Bottom plate (27a) are joined by using a Ball Catch Joint System (26b). The assembly process for the EL Panel can be easily done by placing the printed ITO film into the film recess (27e), position using the Locator (27c), placing the 2 cables onto the Cable recess (27g) and close the Clip to lock the connection with Snap feature (26d & 27d). The purpose of this invention is to increase our productively and efficiency during the mass production of the EL Panels.

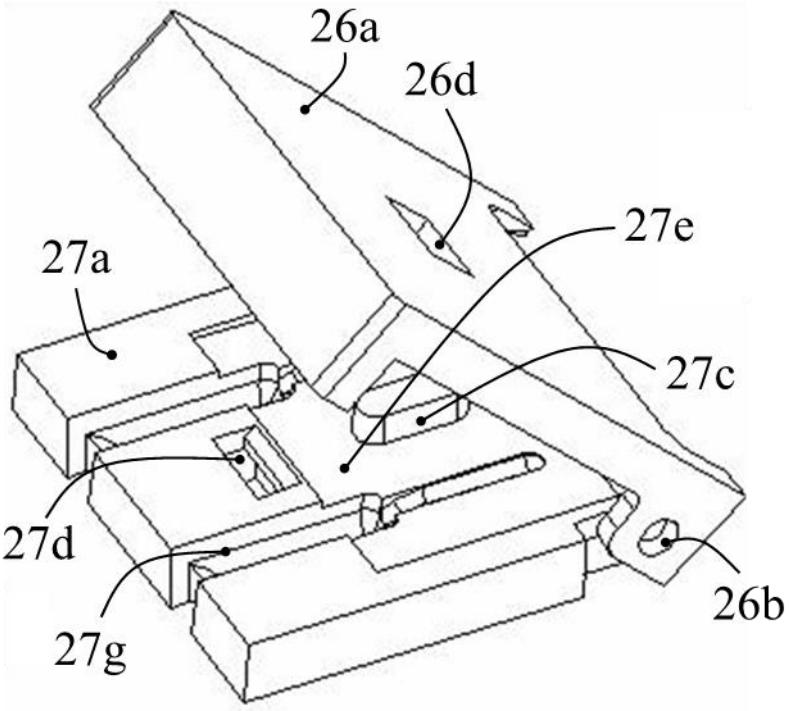

Figure XXX