(12) INTERNATIONAL APPLICATION PUBLISHED UNDER THE PATENT COOPERATION TREATY (PCT)

(19) World Intellectual Property Organization
International Bureau

(43) International Publication Date
18 November 2004 (18.11.2004)

PCT

(10) International Publication Number
WO 2004/100198 A1

(51) International Patent Classification[7]: H01H 33/66, 51/22

(21) International Application Number: PCT/NL2004/000267

(22) International Filing Date: 22 April 2004 (22.04.2004)

(25) Filing Language: English

(26) Publication Language: English

(30) Priority Data:
1023381 9 May 2003 (09.05.2003) NL

(71) Applicant *(for all designated States except US)*: **EATON ELECTRIC N.V.** [NL/NL]; Europalaan 202, NL-7559 SC Hengelo (NL).

(72) Inventor; and

(75) Inventor/Applicant *(for US only)*: **LAMMERS, Arend, Jan, Willem** [NL/NL]; Louis Bouwmeesterstraat 117, NL-7558 TV Hengelo (NL).

(74) Agents: **VAN WESTENBRUGGE, Adries** et al.; Nederlandsch Octrooibureau, Schveningsweg 82, P.O. Box 29720, NL-2502 LS The Hague (NL).

(81) Designated States *(unless otherwise indicated, for every kind of national protection available)*: AE, AG, AL, AM, AT, AU, AZ, BA, BB, BG, BR, BW, BY, BZ, CA, CH, CN, CO, CR, CU, CZ, DE, DK, DM, DZ, EC, EE, EG, ES, FI, GB, GD, GE, GH, GM, HR, HU, ID, IL, IN, IS, JP, KE, KG, KP, KR, KZ, LC, LK, LR, LS, LT, LU, LV, MA, MD, MG, MK, MN, MW, MX, MZ, NA, NI, NO, NZ, OM, PG, PH, PL, PT, RO, RU, SC, SD, SE, SG, SK, SL, SY, TJ, TM, TN, TR, TT, TZ, UA, UG, US, UZ, VC, VN, YU, ZA, ZM, ZW.

(84) Designated States *(unless otherwise indicated, for every kind of regional protection available)*: ARIPO (BW, GH, GM, KE, LS, MW, MZ, SD, SL, SZ, TZ, UG, ZM, ZW), Eurasian (AM, AZ, BY, KG, KZ, MD, RU, TJ, TM), European (AT, BE, BG, CH, CY, CZ, DE, DK, EE, ES, FI, FR, GB, GR, HU, IE, IT, LU, MC, NL, PL, PT, RO, SE, SI, SK, TR), OAPI (BF, BJ, CF, CG, CI, CM, GA, GN, GQ, GW, ML, MR, NE, SN, TD, TG).

Published:
— *with international search report*

For two-letter codes and other abbreviations, refer to the "Guidance Notes on Codes and Abbreviations" appearing at the beginning of each regular issue of the PCT Gazette.

(54) Title: ELECTROMAGNETIC ACTUATOR

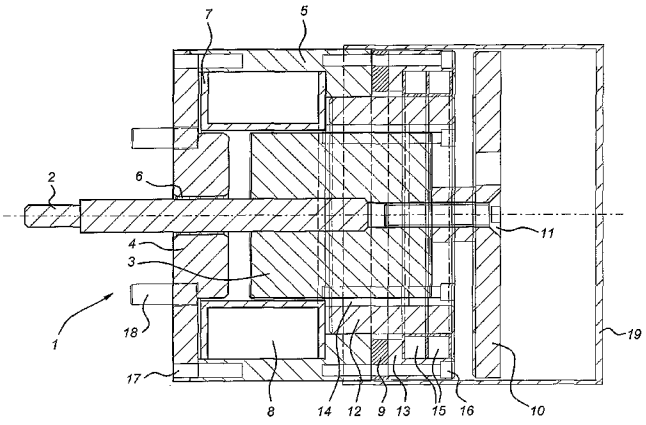

(57) Abstract: Electromagnetic actuator for operating at least one movable contact of a switch into a switched-on position or a switched-off position. The electromagnetic actuator (1) has a first magnetic circuit for making a movable (3) and a fixed (4) pole body move towards one another and a second magnetic circuit, separate from the first magnetic circuit, with a permanent magnet (9) and a retaining plate (10). A switching-off coil (15) operates to counteract the magnetic field in the second magnetic circuit so that the actuator (1) can return to a switched-off position. In the axial direction of the actuator (1), the switching-off coil (15) is positioned Gloser to the retaining plate (10) than the permanent magnet (9), as a result of which more effective operation of the actuator is possible. Furthermore, the actuator is constructed from cylindrical elements that are easy to produce and to assemble.

WO 2004/100198 A1