(12) INTERNATIONAL APPLICATION PUBLISHED UNDER THE PATENT COOPERATION TREATY (PCT)

(19) World Intellectual Property Organization
International Bureau

(43) International Publication Date
14 February 2002 (14.02.2002)

PCT

(10) International Publication Number
WO 02/11998 A2

(51) International Patent Classification[7]: B42F

(21) International Application Number: PCT/CN01/01217

(22) International Filing Date: 2 August 2001 (02.08.2001)

(25) Filing Language: English

(26) Publication Language: English

(30) Priority Data:
0018986.0 2 August 2000 (02.08.2000) GB

(71) Applicant *(for all designated States except US)*: **LECO STATIONERY MANUFACTURING COMPANY LIMITED** [CN/CN]; 19th Floor, Koon Wah Mirrors Factory, 3rd Industrial Building, 5-9 Ka Hing Road, Kwai Chung, New Territories, Hong Kong (CN).

(72) Inventor; and

(75) Inventor/Applicant *(for US only)*: **PI, Jinbiao** [CN/CN]; Team #4, Changling Village, Shuguang Township, Daye City, Hubei Province (CN).

(74) Agent: **LIU, SHEN & ASSOCIATES**; A0601, Huibin Building, No. 8 Beichen Dong Street, Chaoyang District, Beijing 100101 (CN).

(81) Designated States *(national)*: AE, AG, AL, AM, AT, AT (utility model), AU, AZ, BA, BB, BG, BR, BY, BZ, CA, CH, CN, CO, CR, CU, CZ, CZ (utility model), DE, DE (utility model), DK, DK (utility model), DM, DZ, EC, EE, EE (utility model), ES, FI, FI (utility model), GB, GD, GE, GH, GM, HR, HU, ID, IL, IN, IS, JP, KE, KG, KP, KR, KZ, LC, LK, LR, LS, LT, LU, LV, MA, MD, MG, MK, MN, MW, MX, MZ, NO, NZ, PL, PT, RO, RU, SD, SE, SG, SI, SK, SK (utility model), SL, TJ, TM, TR, TT, TZ, UA, UG, US, UZ, VN, YU, ZA, ZW.

[Continued on next page]

(54) Title: DEVICE FOR RETAINING A STACK OF PAPERS IN A FILE

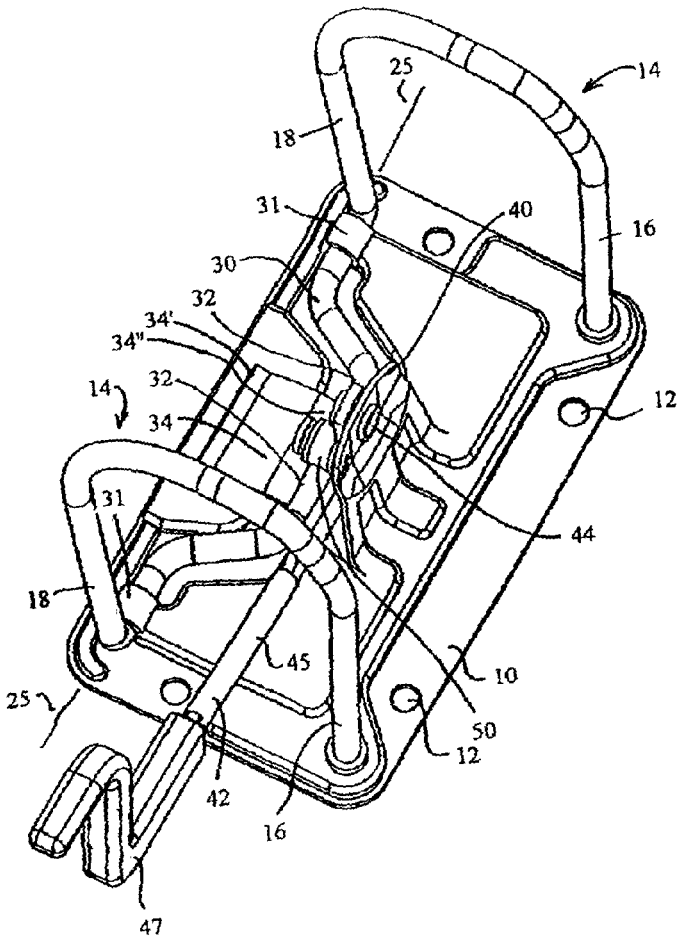

(57) Abstract: There is disclosed a device for retaining a stack of hole-punched papers in a file, e.g. an arch lever mechanism for an arch lever file. The device comprises: a base (10); at least two rings (14) secured to and extending upwardly from the base for engaging the marginal holes in the papers, each ring being composed of a moveable first section (18) and a second section (16), the rings being arranged to engage holes in the margin of the papers; a mechanism for keeping the fist and second sections (16, 18) of each ring (14) in either a closed position (as shown) in which the first and second sections of each ring are spaced apart form each other to allow papers to be added to, or removed from, the rings. The mechanism includes a lever (42) having a handle end (45) and an operating end (47), the operating end engaging the rest of the mechanism for moving the first and second sections of each ring between the open and the closed positions. The surface of the handle end of the lever is formed of a material that is softer than metal, preferably a plastic material.

WO 02/11998 A2

(84) Designated States *(regional)*: ARIPO patent (GH, GM, KE, LS, MW, MZ, SD, SL, SZ, TZ, UG, ZW), Eurasian patent (AM, AZ, BY, KG, KZ, MD, RU, TJ, TM), European patent (AT, BE, CH, CY, DE, DK, ES, FI, FR, GB, GR, IE, IT, LU, MC, NL, PT, SE, TR), OAPI patent (BF, BJ, CF, CG, CI, CM, GA, GN, GQ, GW, ML, MR, NE, SN, TD, TG).

Published:

— *without international search report and to be republished upon receipt of that report*

For two-letter codes and other abbreviations, refer to the "Guidance Notes on Codes and Abbreviations" appearing at the beginning of each regular issue of the PCT Gazette.