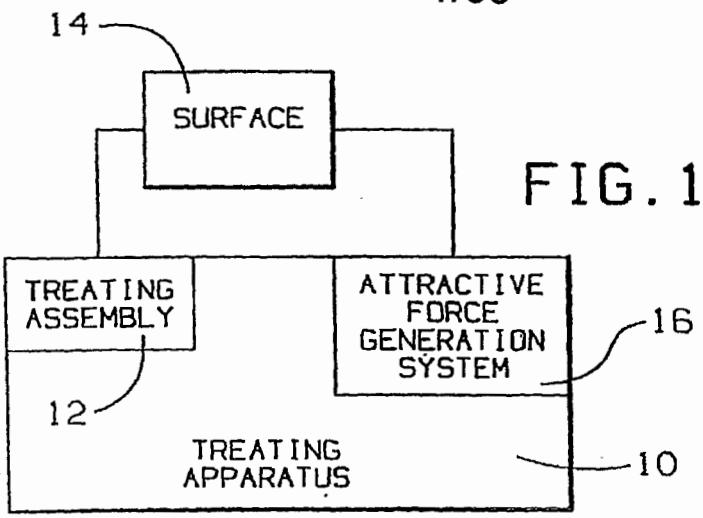

FIG. 1

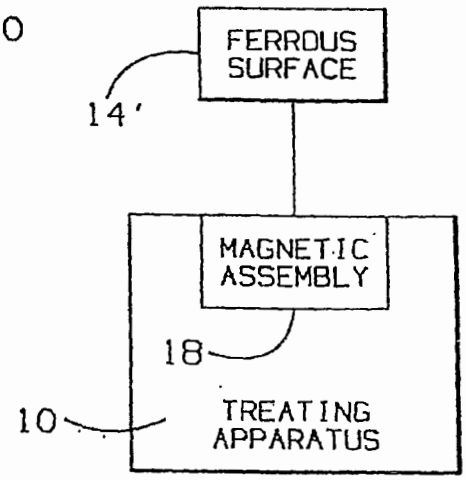

FIG. 2

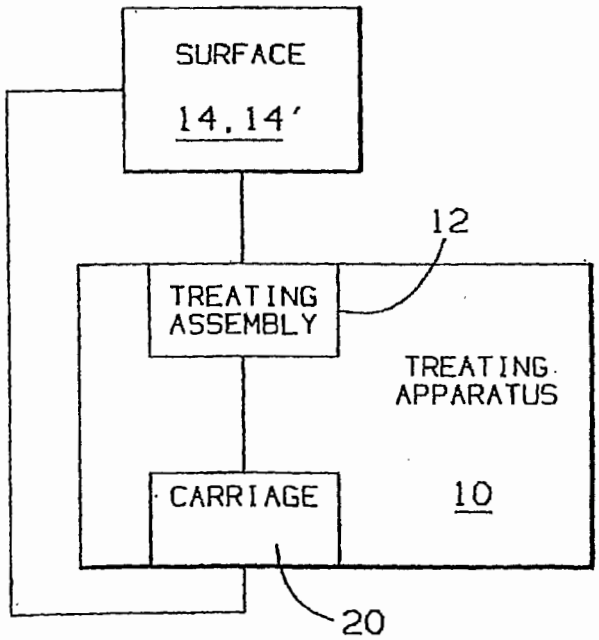

FIG. 3

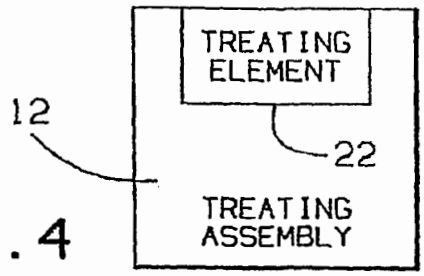

FIG. 4

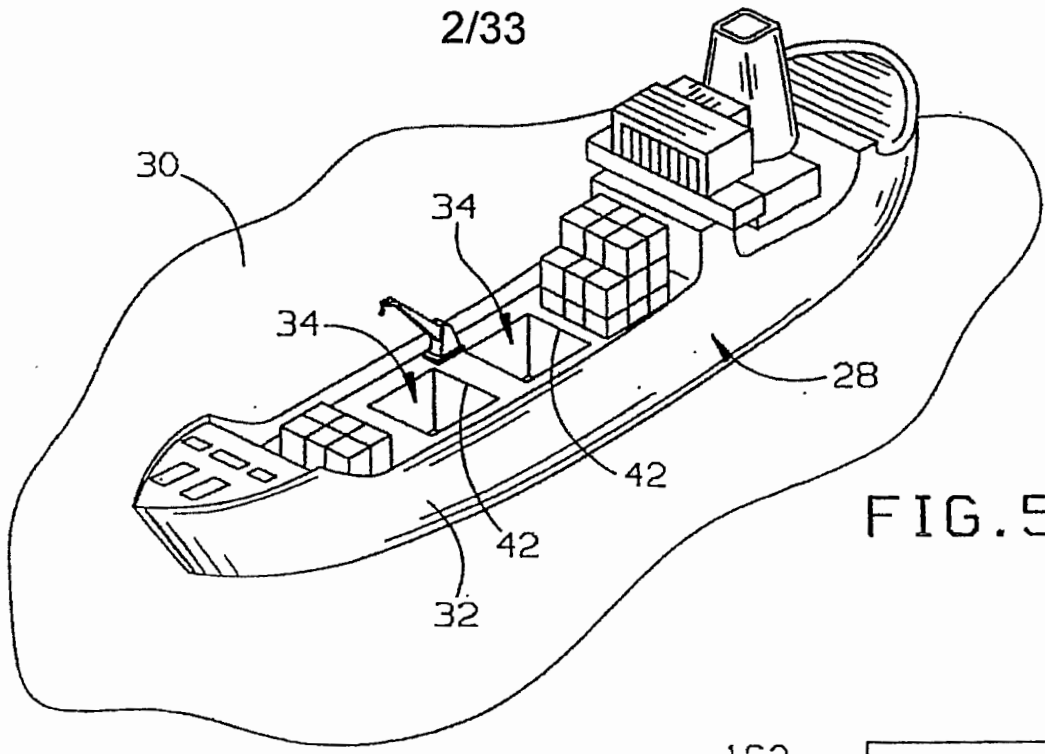
30
34
34
28
42
42
32

FIG.5

FIG.6

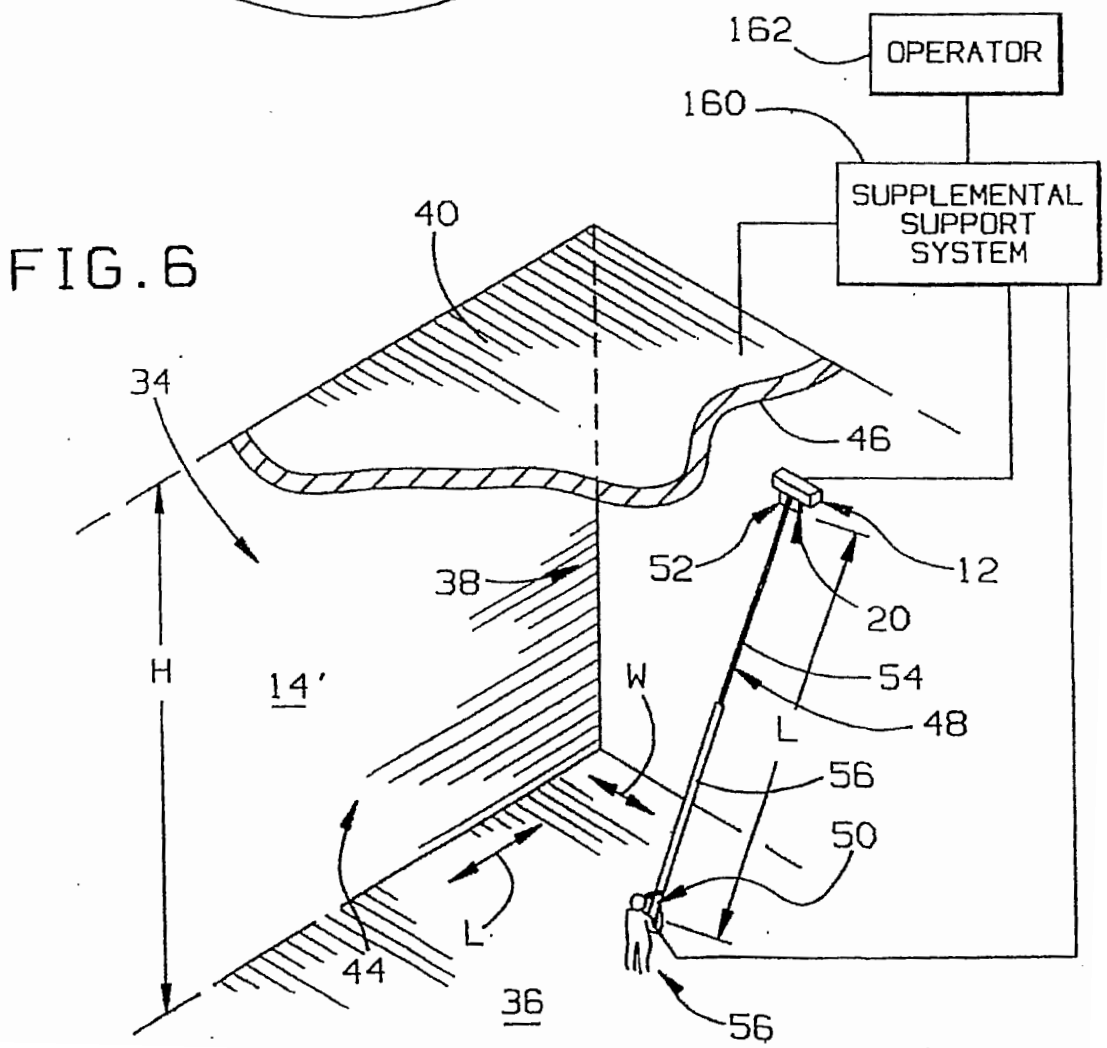
162
OPERATOR
160
SUPPLEMENTAL SUPPORT SYSTEM
40
34
46
38
52
12
20
H
14'
W
54
48
L
56
50
L
44
36
56

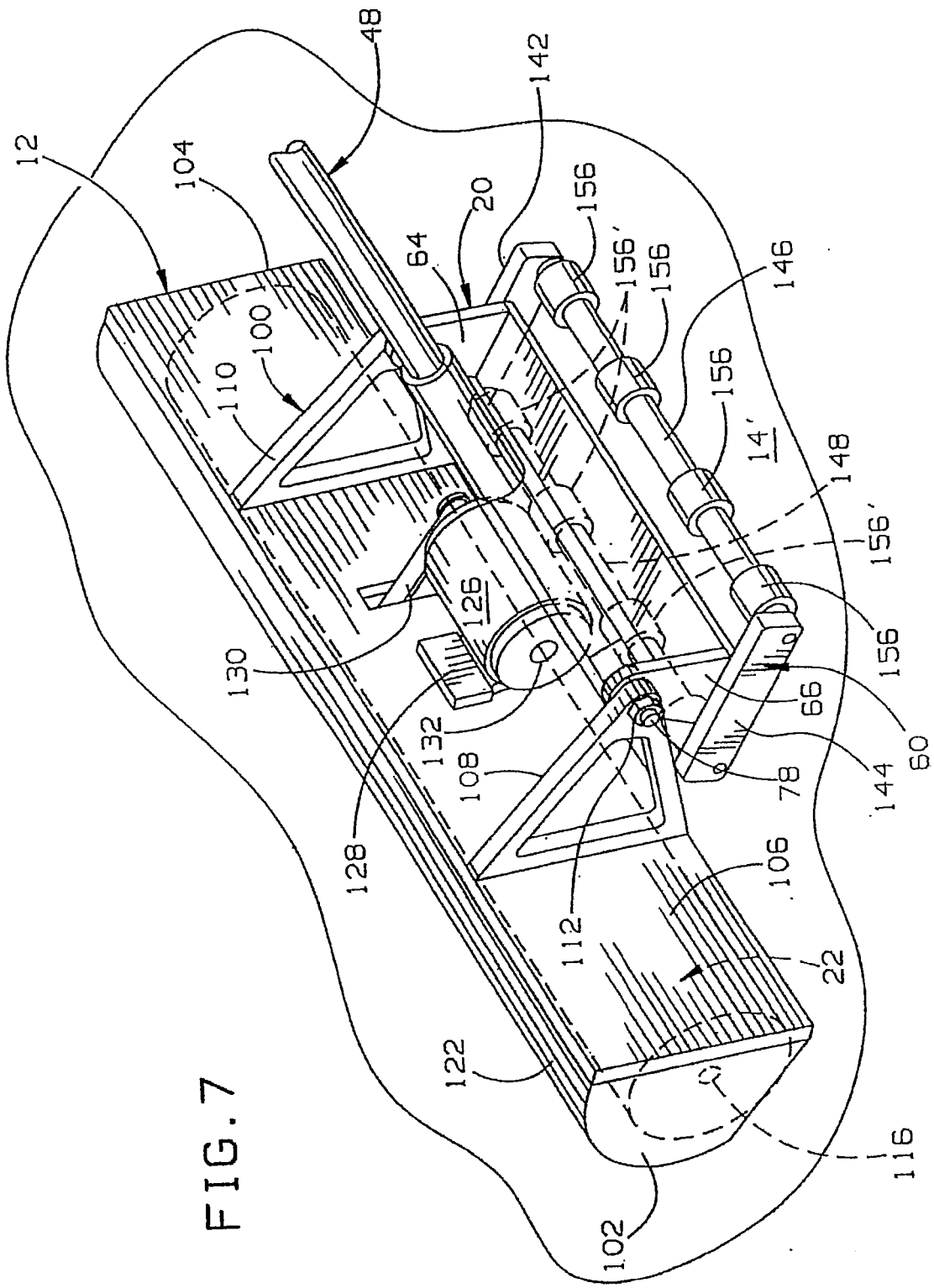
48
142
12
104
20
156
64
156'
156
146
100
110
156
14'
148
156'
126
130
156
66
60
132
108
144
78
128
106
112
22
122
116
102

FIG. 7

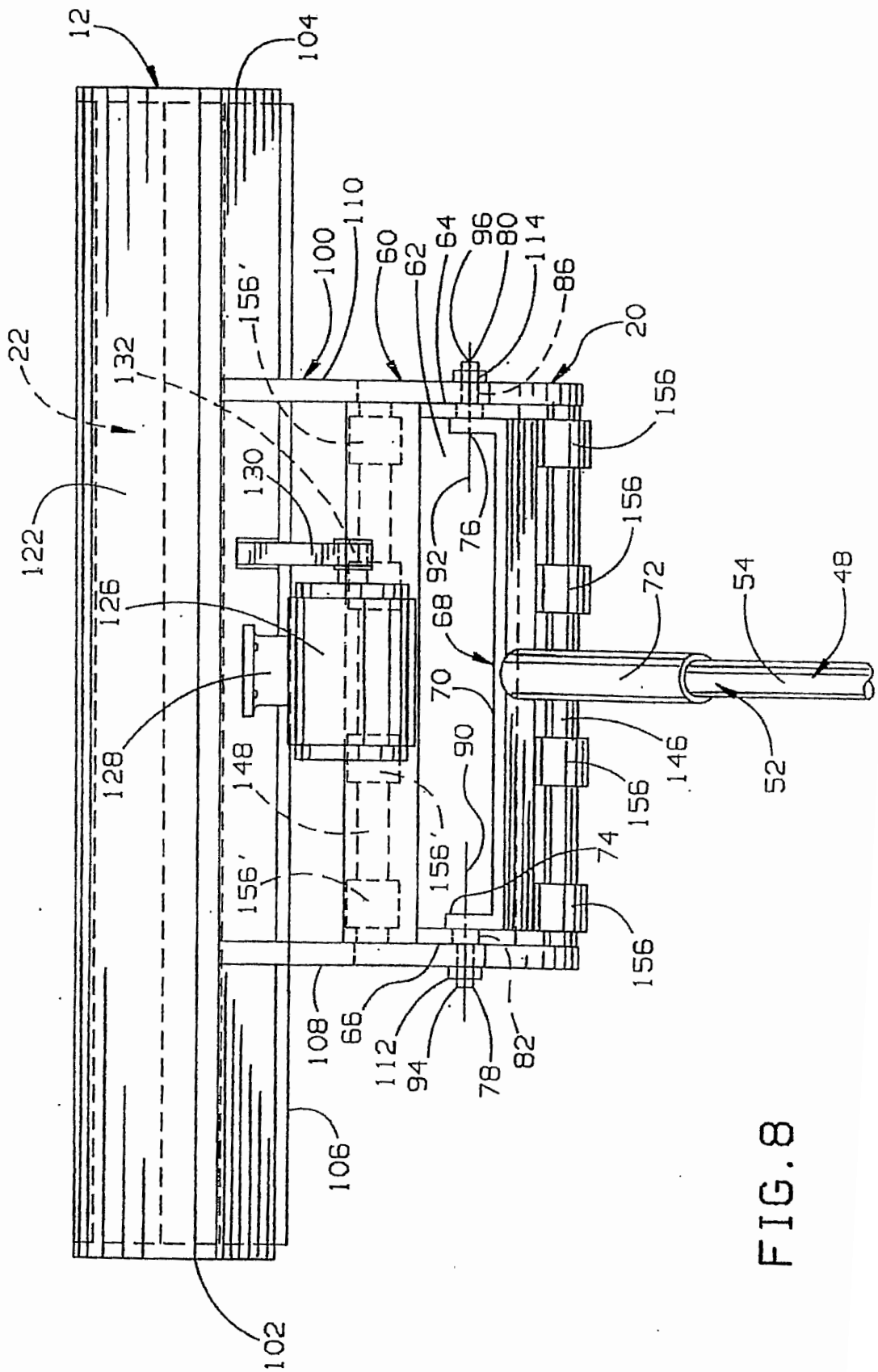
12
104
110
100
60
62
64
96
80
114
86
20
22
132
156'
130
122
126
128
148
156'
92
76
68
70
90
156'
74
156
156
156
72
54
48
146
52
108
66
112
94
78
82
106
102

FIG. 8

FIG. 9

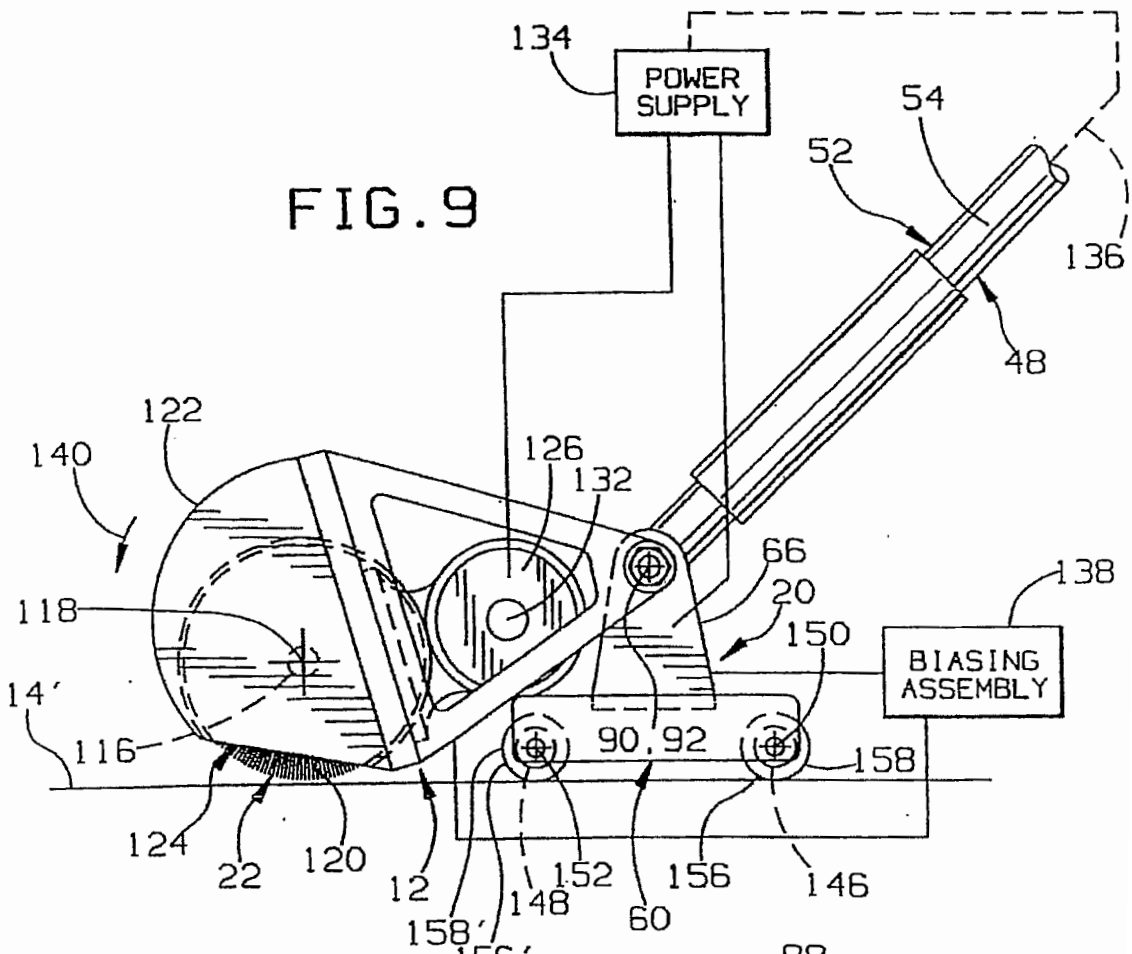
134
POWER SUPPLY
54
52
136
48
122
140
126
132
66
20
138
118
150
BIASING ASSEMBLY
14'
116
90, 92
158
124
22
120
12
158'
156'
148
152
60
156
146

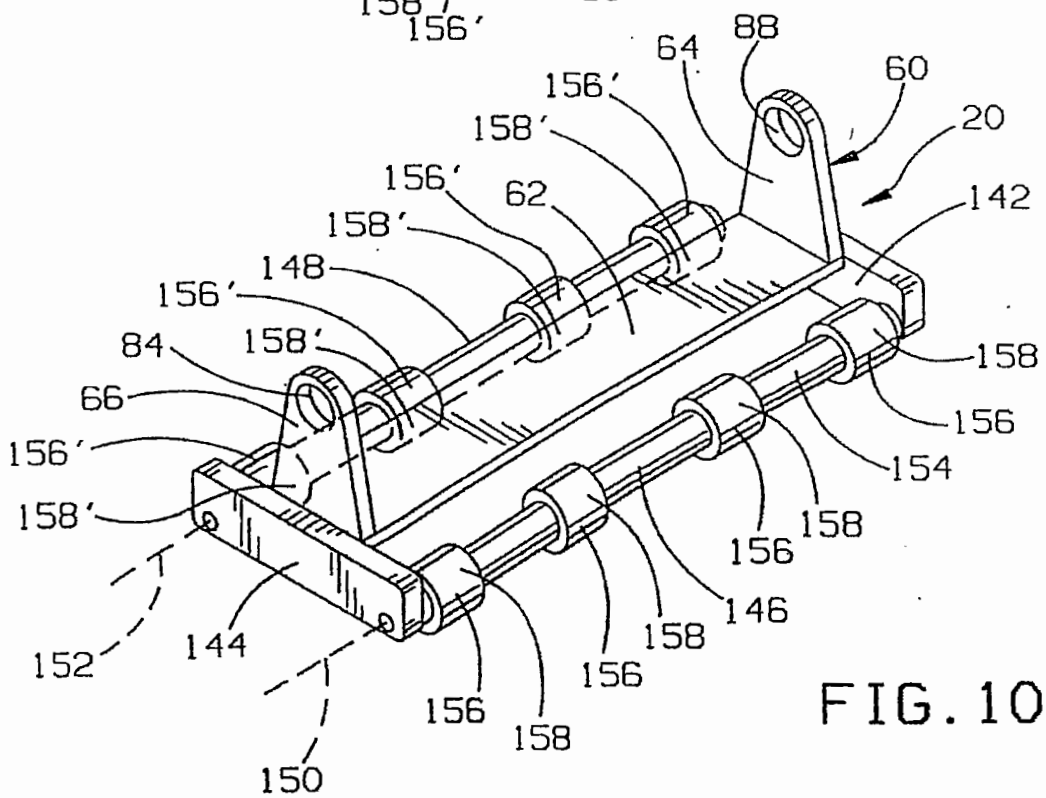
88
64
60
156'
158'
20
156'
62
142
158'
148
156'
84
158'
158
66
156
156'
154
158'
158
156
152
144
146
158
156
156
158
150

FIG. 10

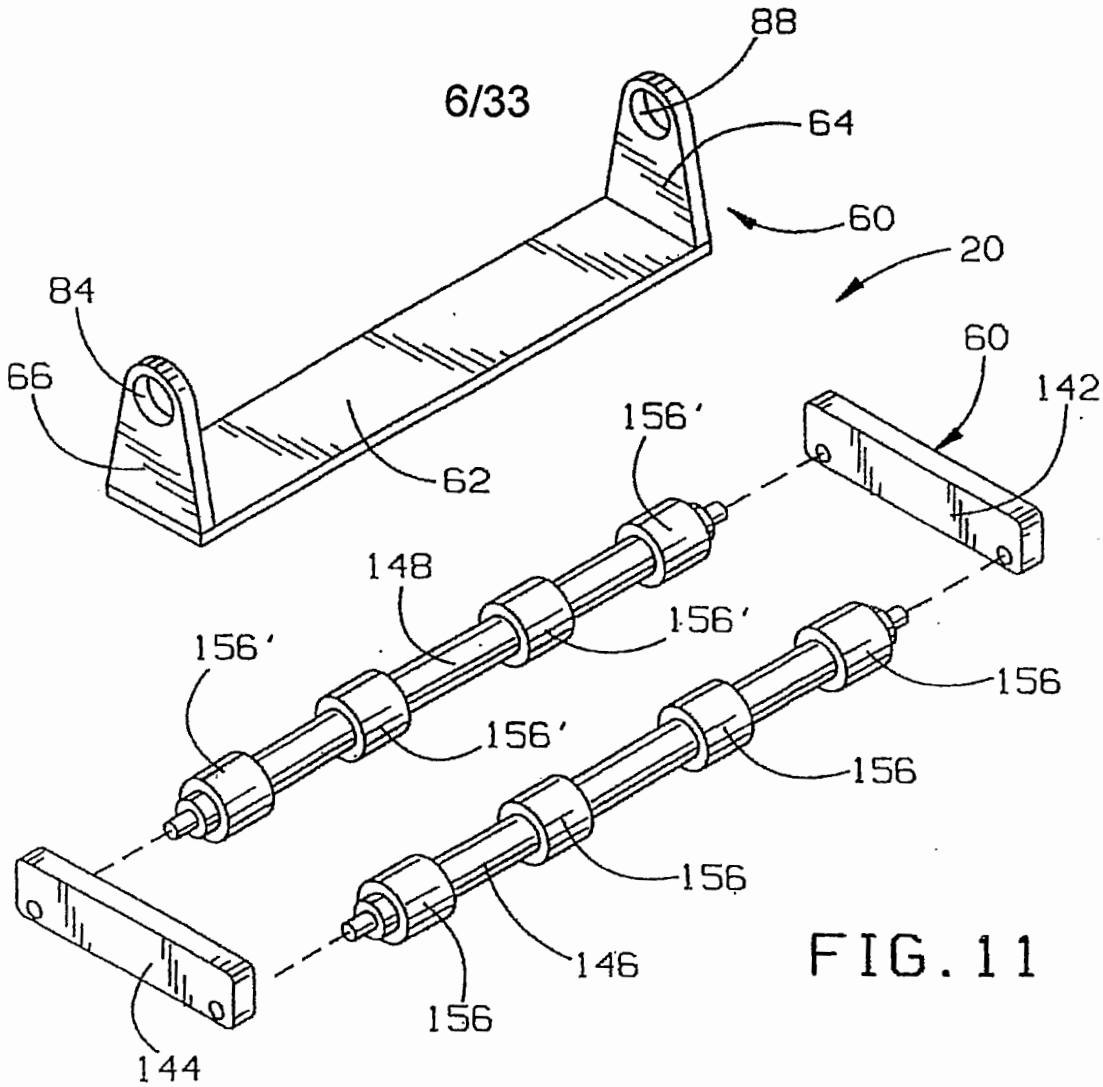
88
64
60
20
84
66
62
60
142
156'
148
156'
156'
156
156'
156
156
146
156
144

FIG. 11

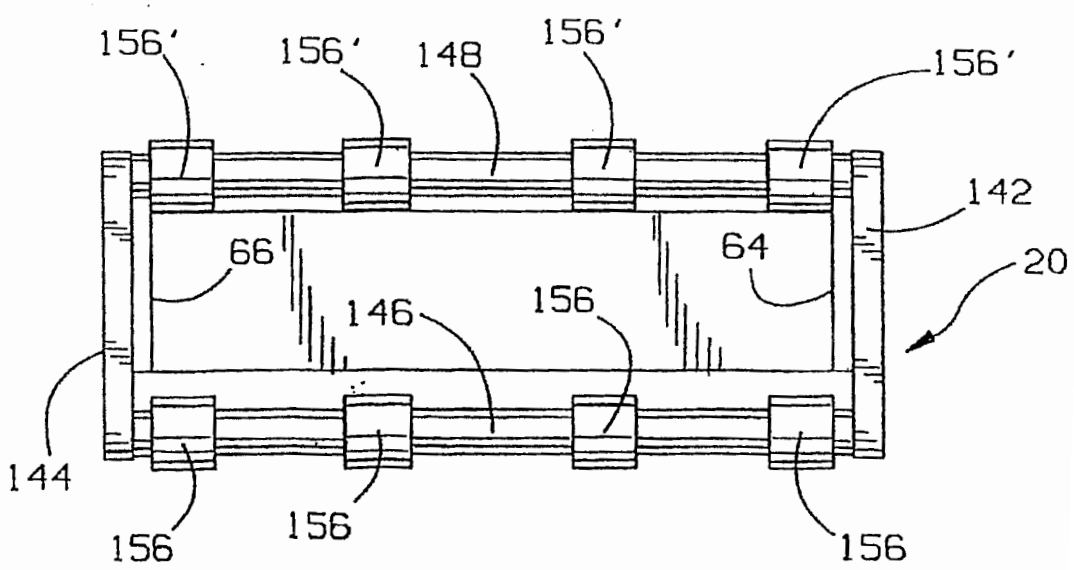
156'
156'
148
156'
156'
142
66
64
20
146
156
144
156
156
156

FIG. 12

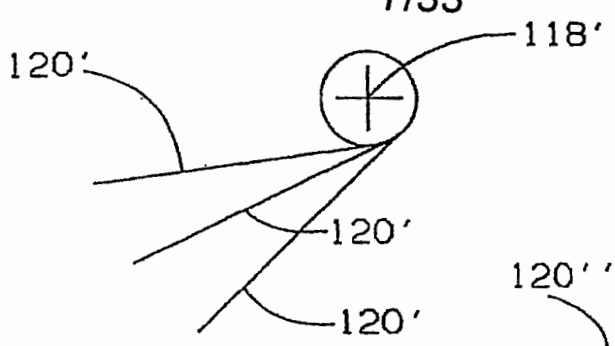

FIG. 13

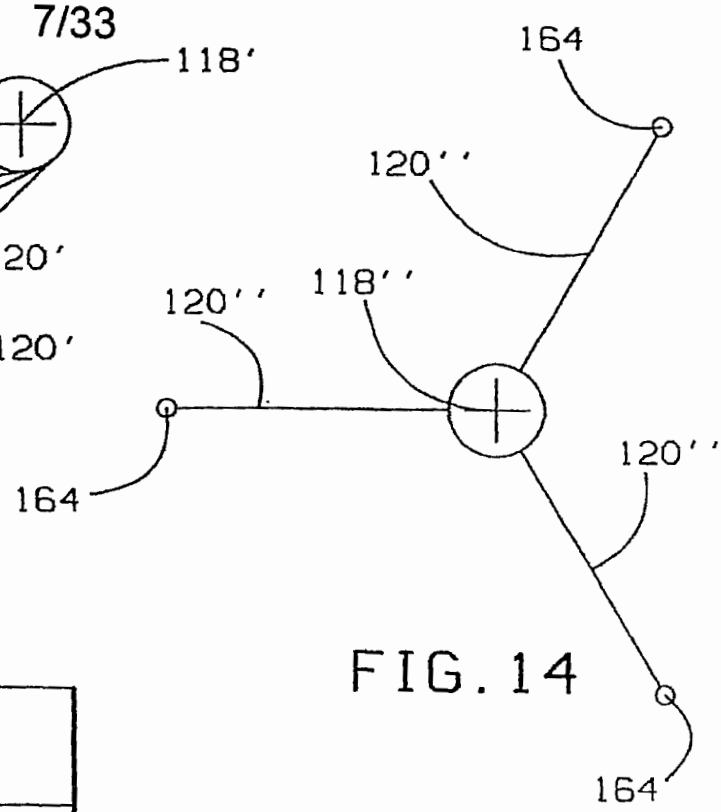

FIG. 14

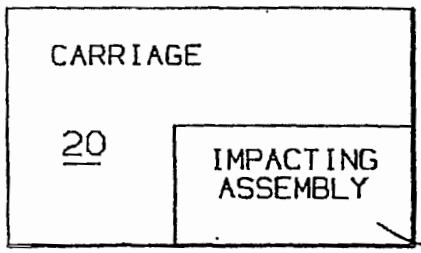

FIG. 15

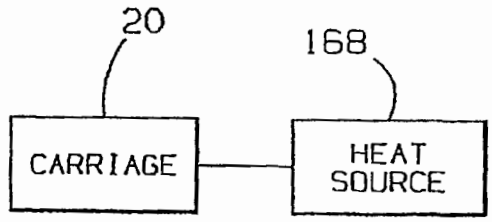

FIG. 16

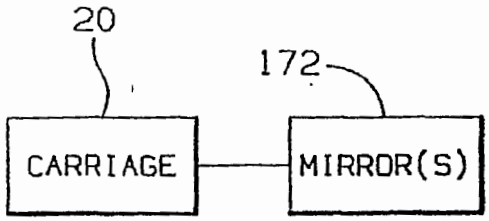

FIG. 18

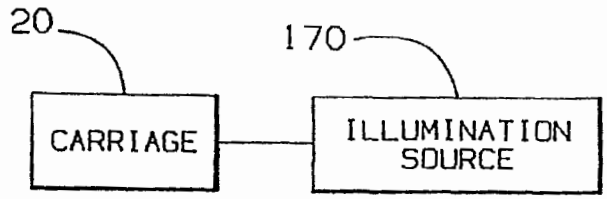

FIG. 17

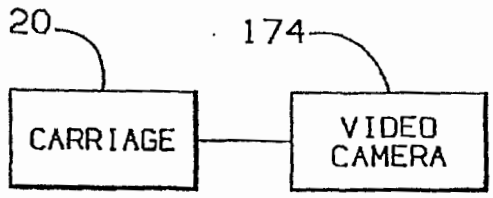

FIG. 19

FIG. 20

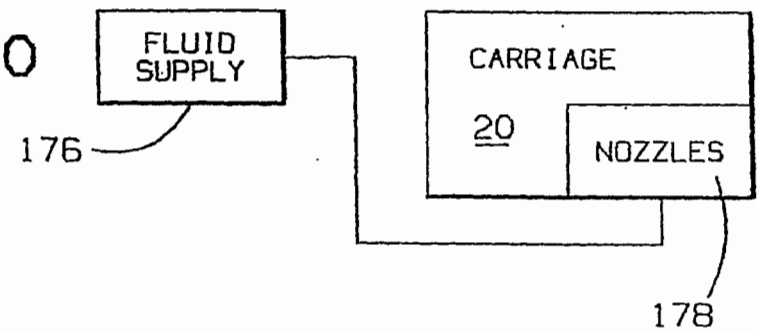

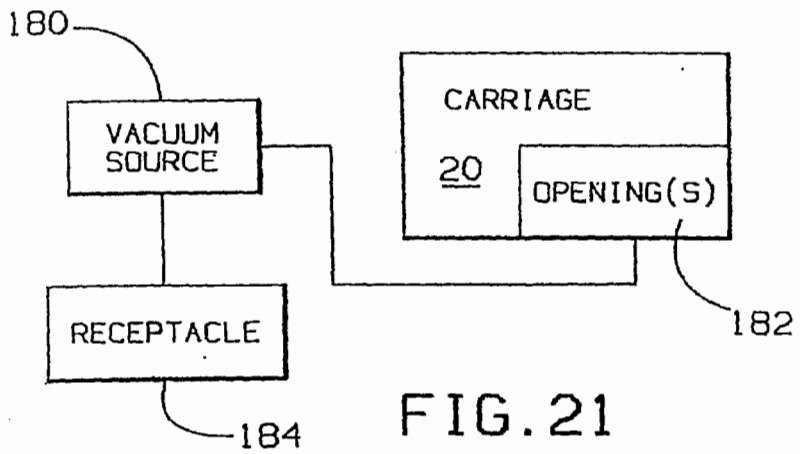

FIG. 21

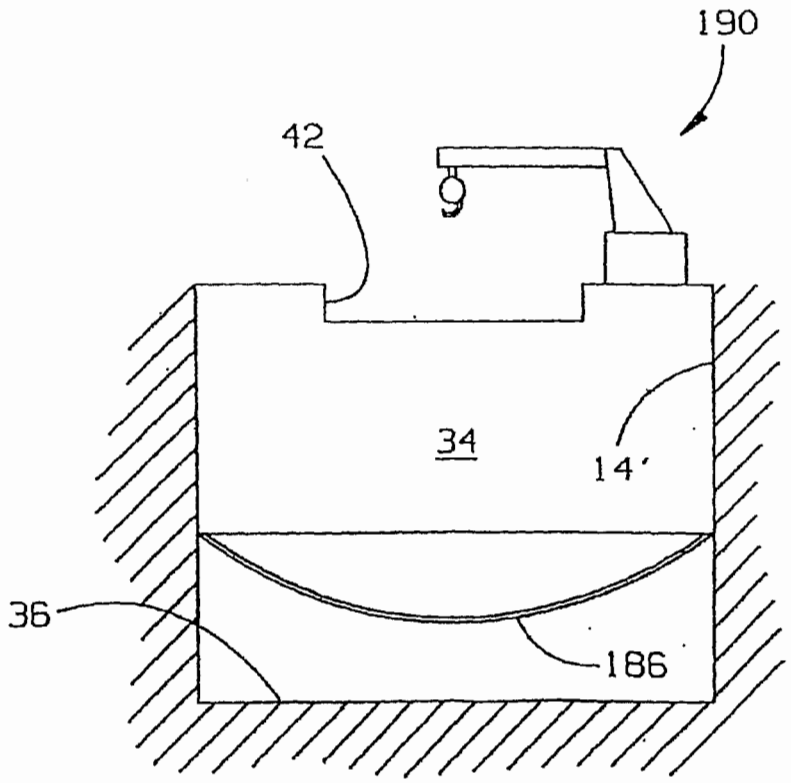

FIG. 22

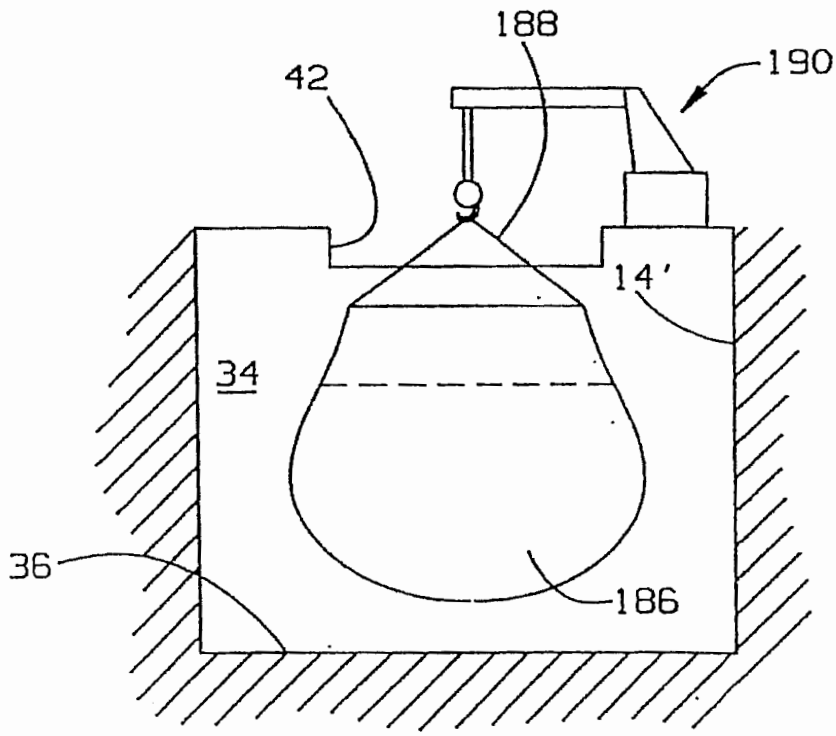

FIG. 23

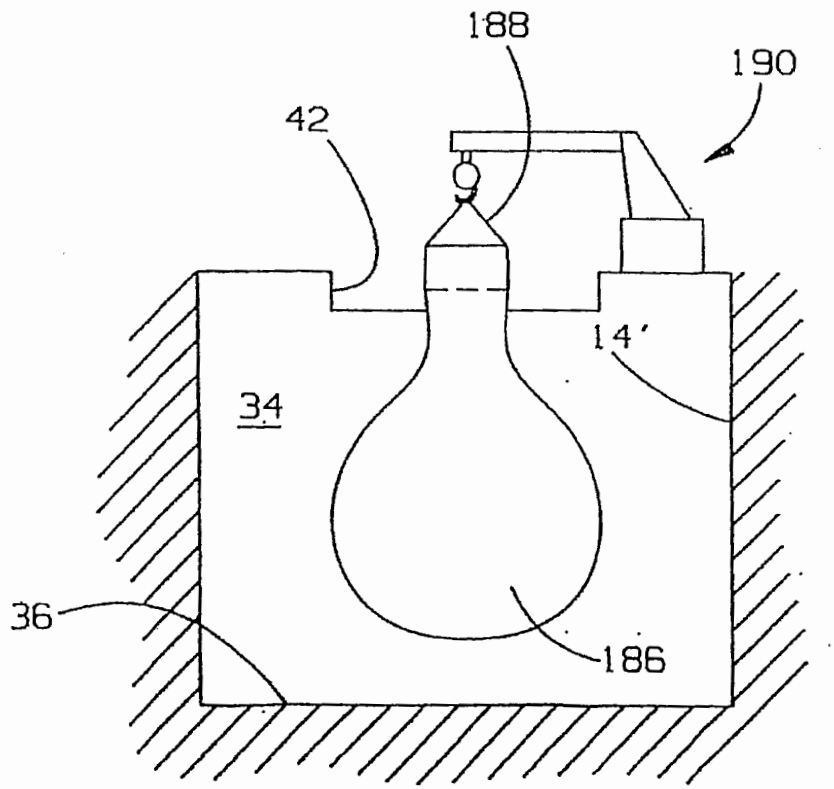

FIG. 24

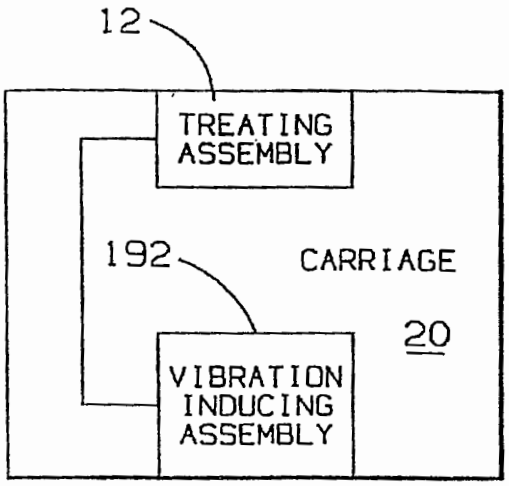

FIG. 25

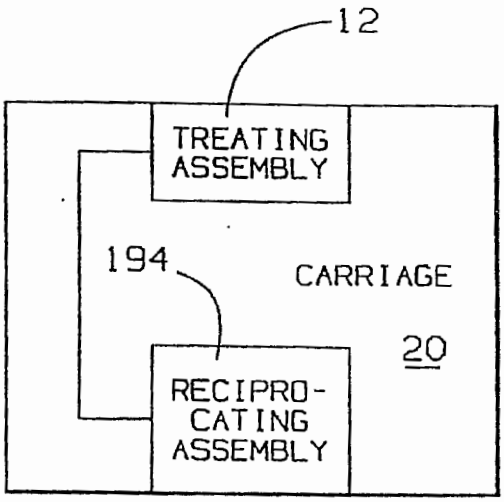

FIG. 26

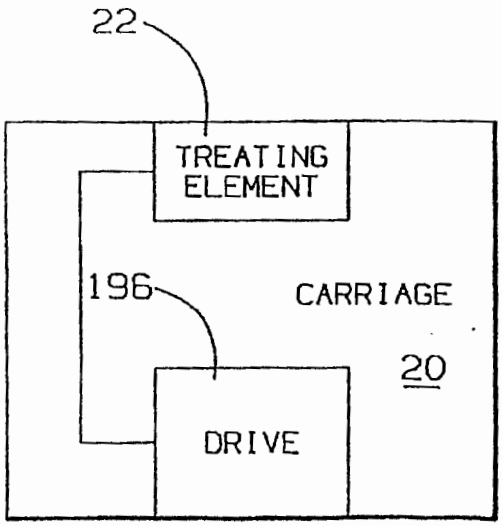

FIG. 27

FIG. 28

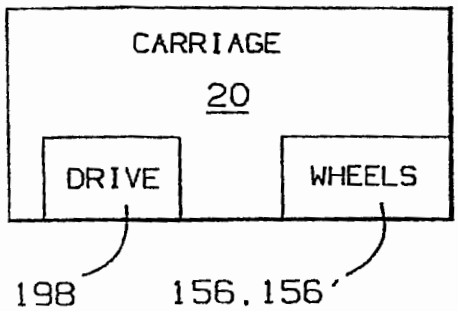

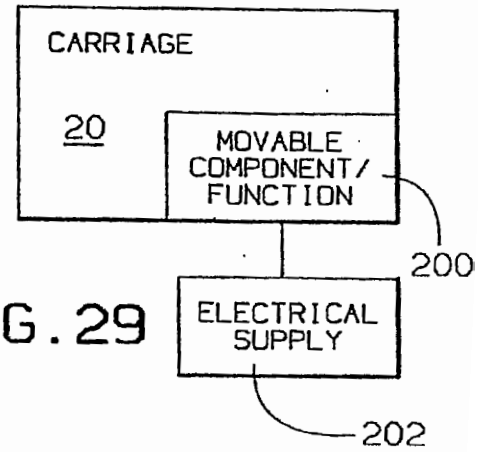

FIG. 29

FIG. 30

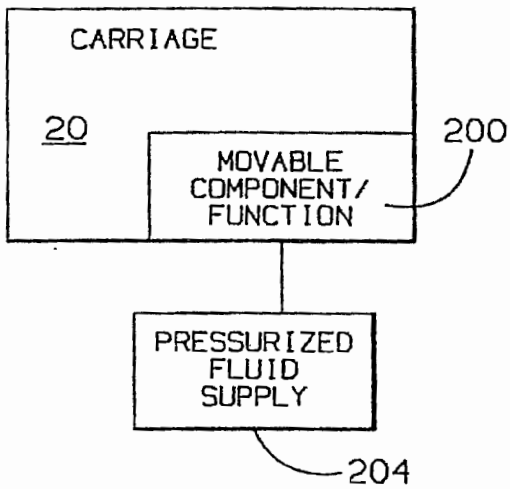

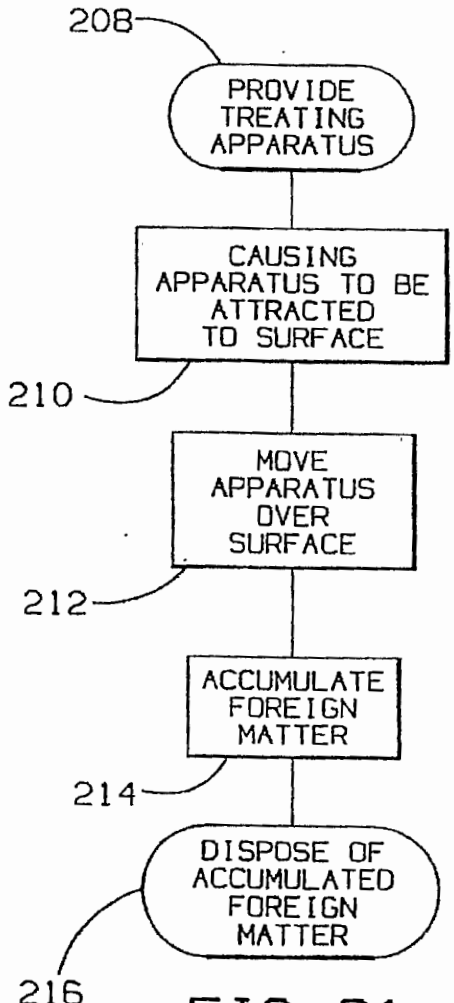

FIG. 31

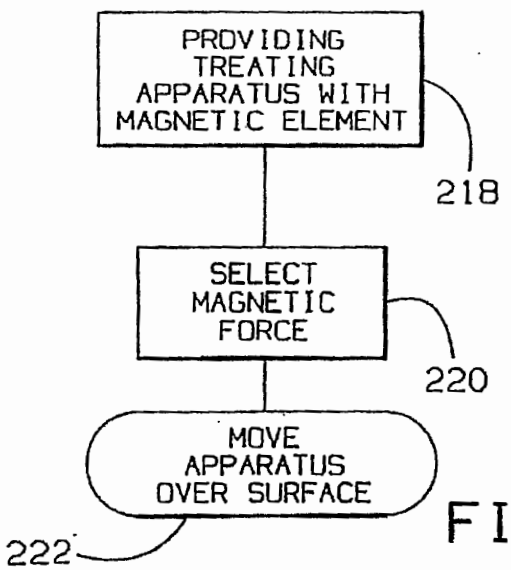

FIG. 32

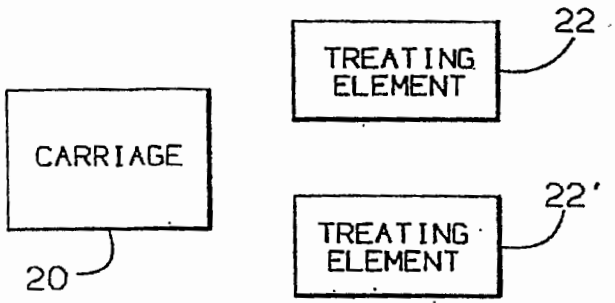

FIG. 33

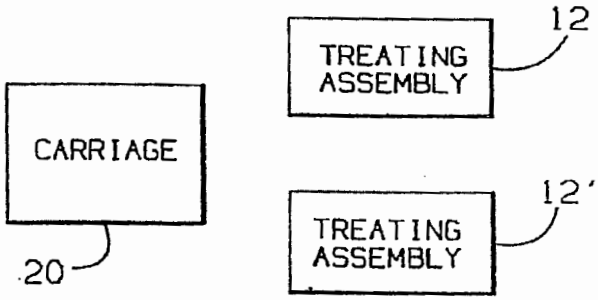

FIG. 34

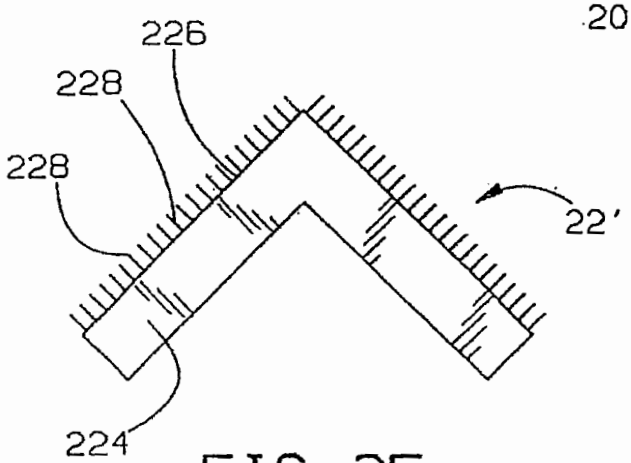

FIG. 35

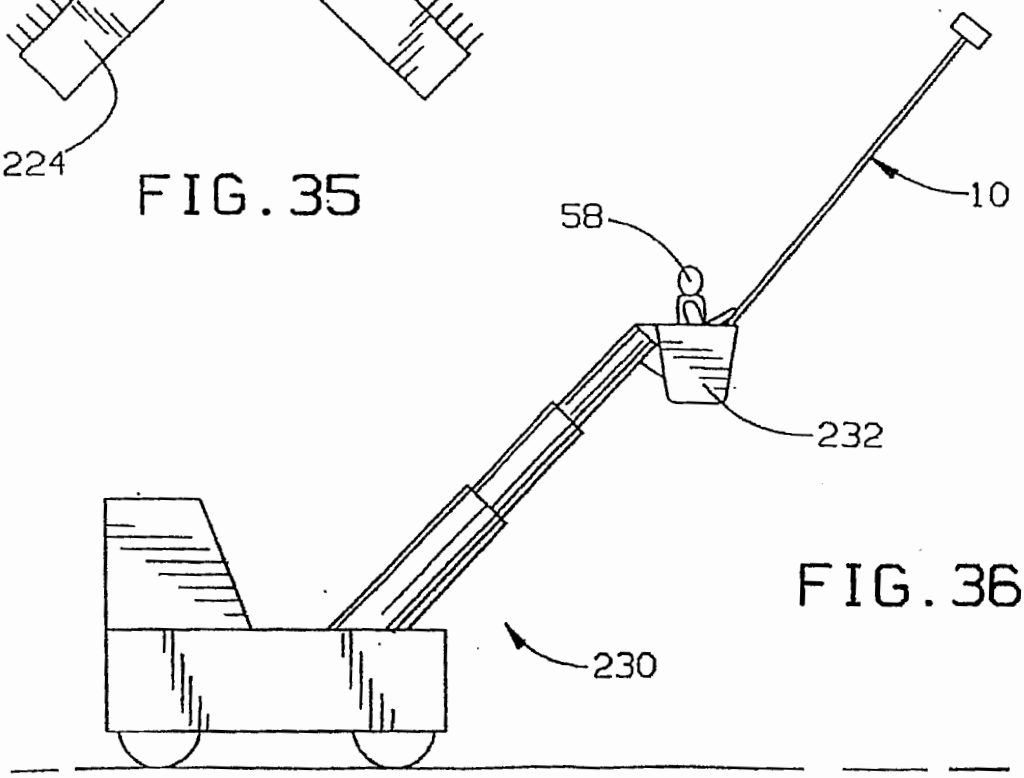

FIG. 36

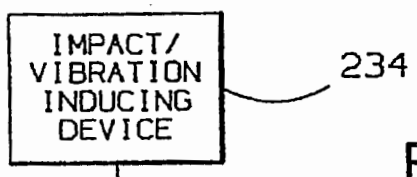

FIG. 37

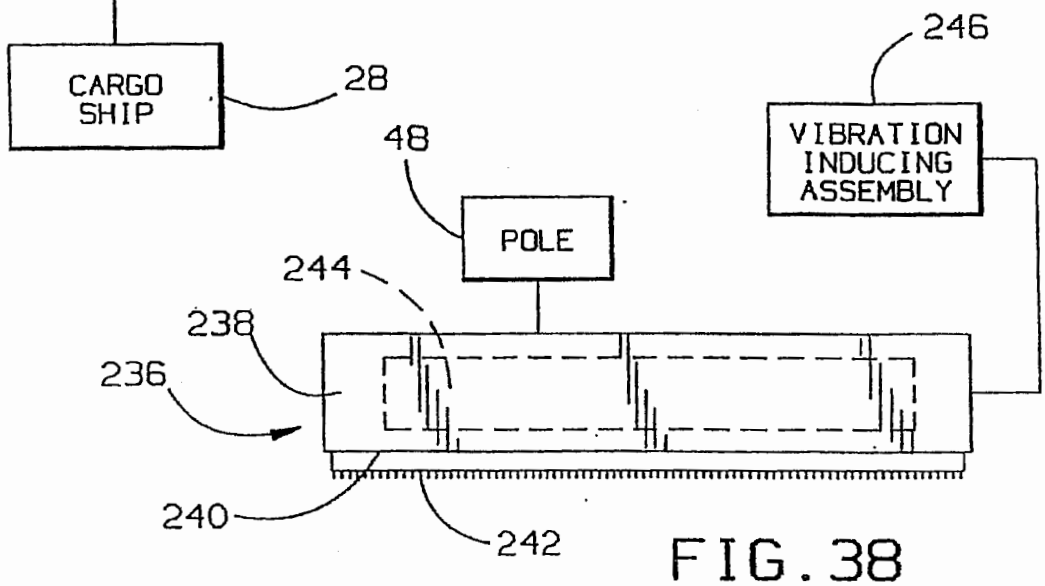

FIG. 38

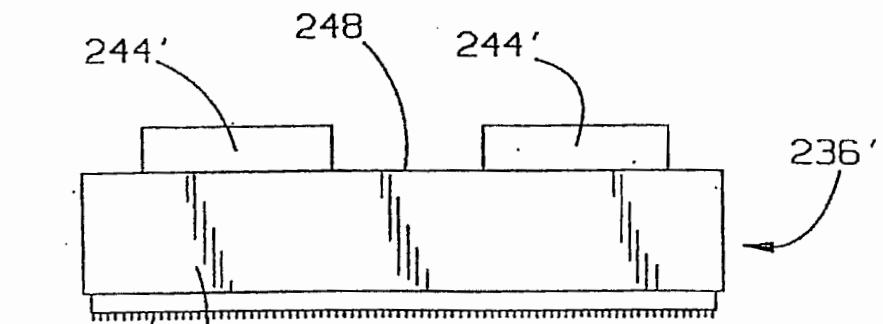

FIG. 39

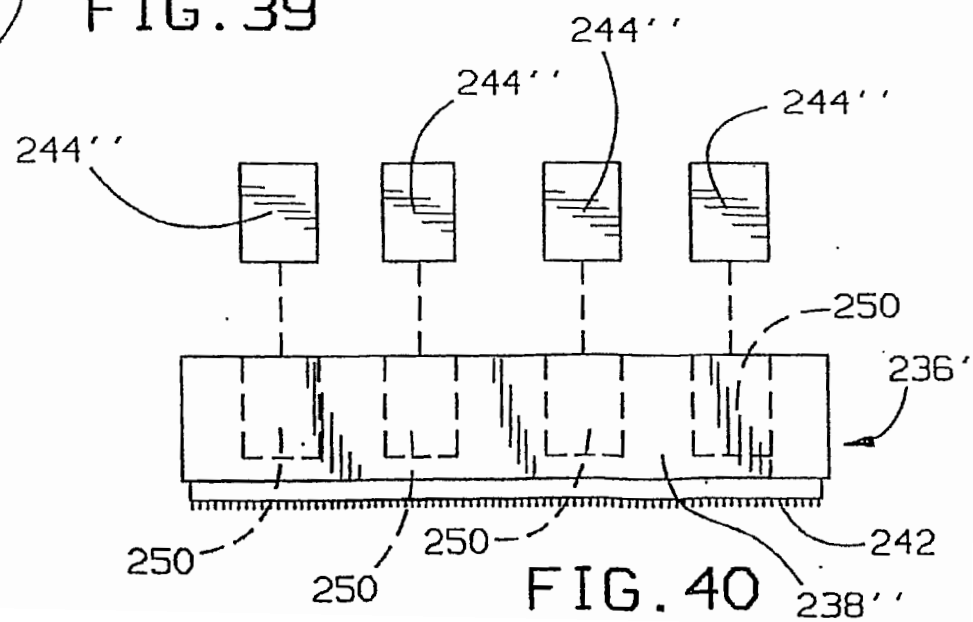

FIG. 40

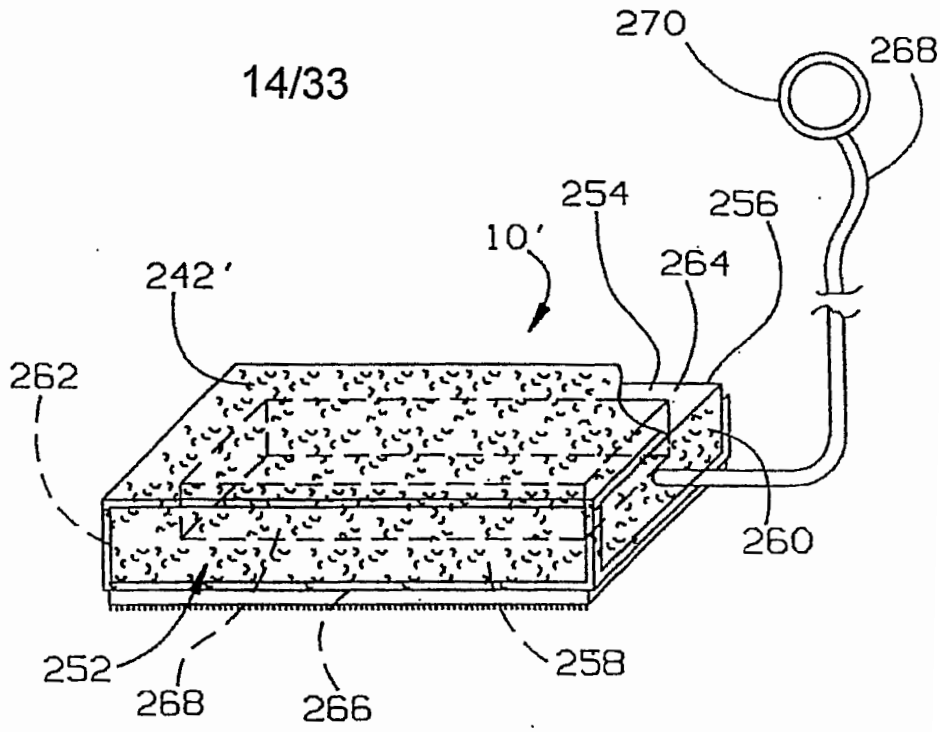

FIG. 41

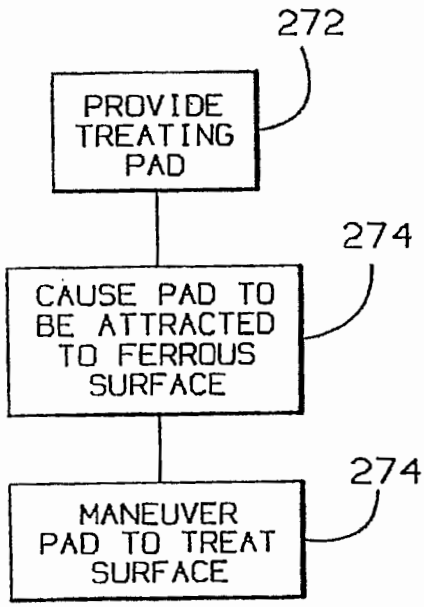

FIG. 42

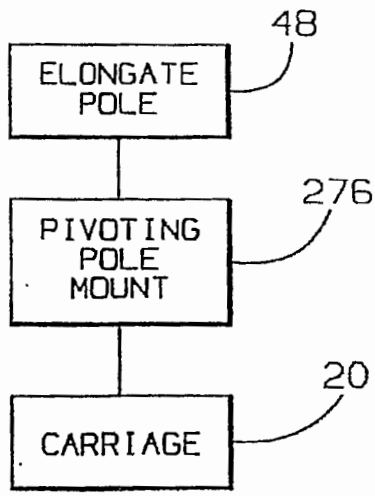

FIG. 43

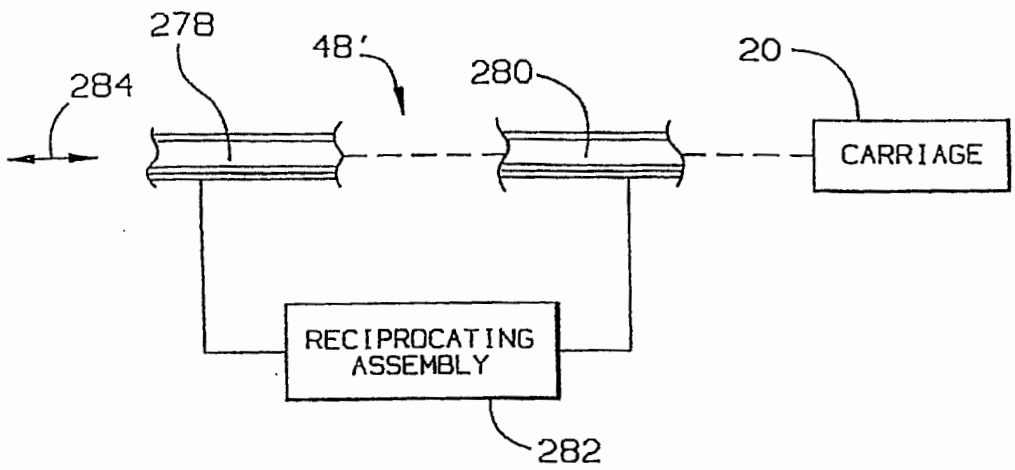
278
48'
280
20
284
CARRIAGE
RECIPROCATING ASSEMBLY
282

FIG. 44

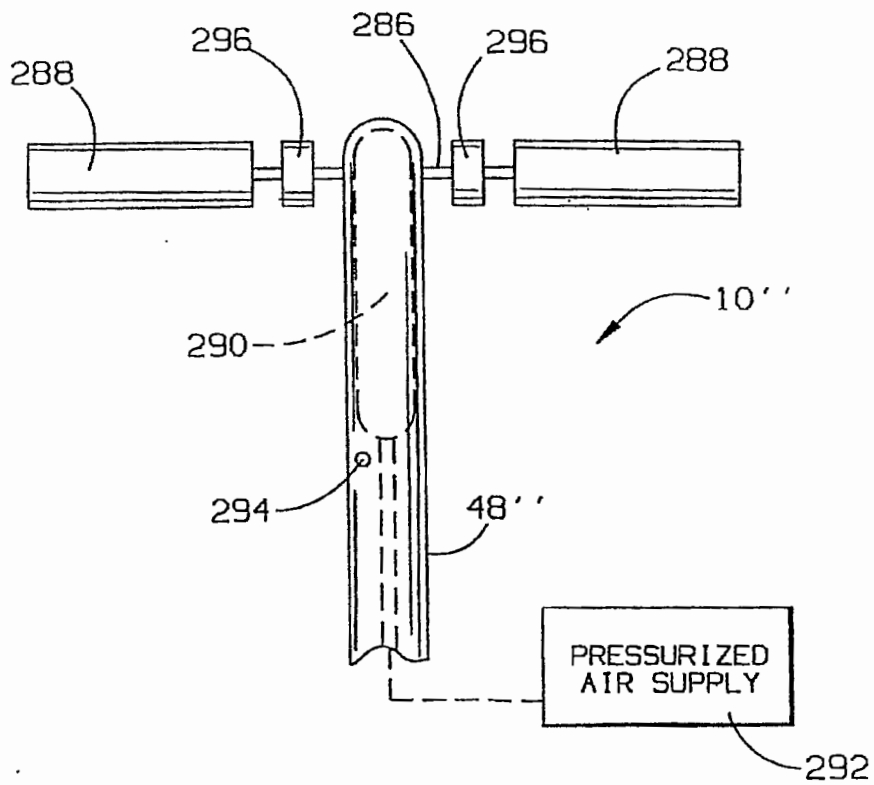
296
286
296
288
288
10''
290
294
48''
PRESSURIZED AIR SUPPLY
292

FIG. 45

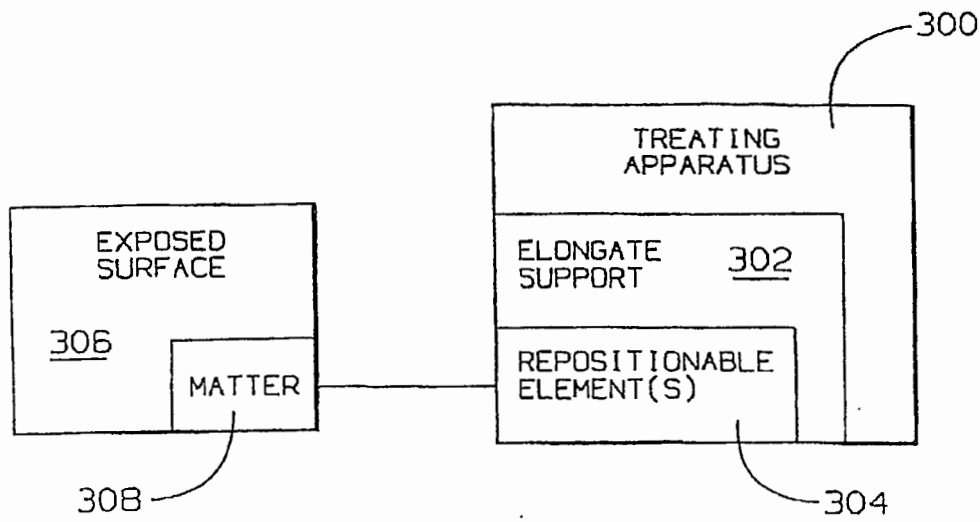
300
TREATING APPARATUS
ELONGATE SUPPORT
302
REPOSITIONABLE ELEMENT(S)
EXPOSED SURFACE
306
MATTER
308
304

FIG. 46

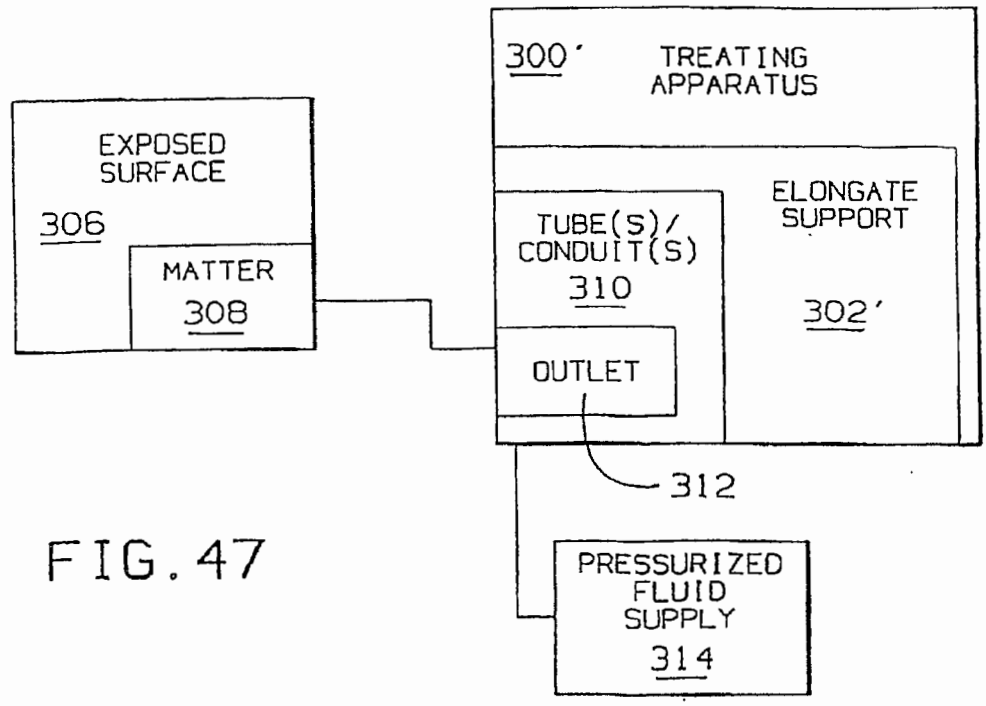
300'
TREATING APPARATUS
EXPOSED SURFACE
306
MATTER
308
TUBE(S)/ CONDUIT(S)
310
ELONGATE SUPPORT
302'
OUTLET
312
PRESSURIZED FLUID SUPPLY
314

FIG. 47

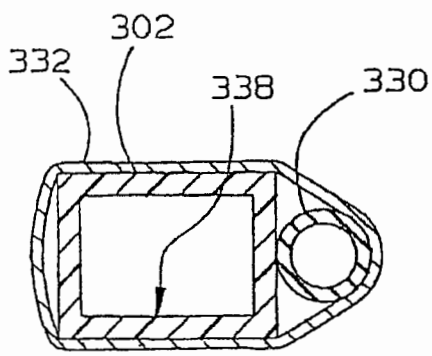
302
332
338
330

FIG. 49

304c
336b
336c
304b
304d
336d
336a
336e
304a
308
304e
CARRIAGE
334
328
326
324
340
318
SUPPLEMENTAL SUPPORT/ GUIDE STRUCTURE
332
306
332
332
332
302
300
49
49
332
332
316
330
HANDLE
322
PRESSURIZED FLUID SUPPLY
314
320
342

FIG. 48

FIG.50

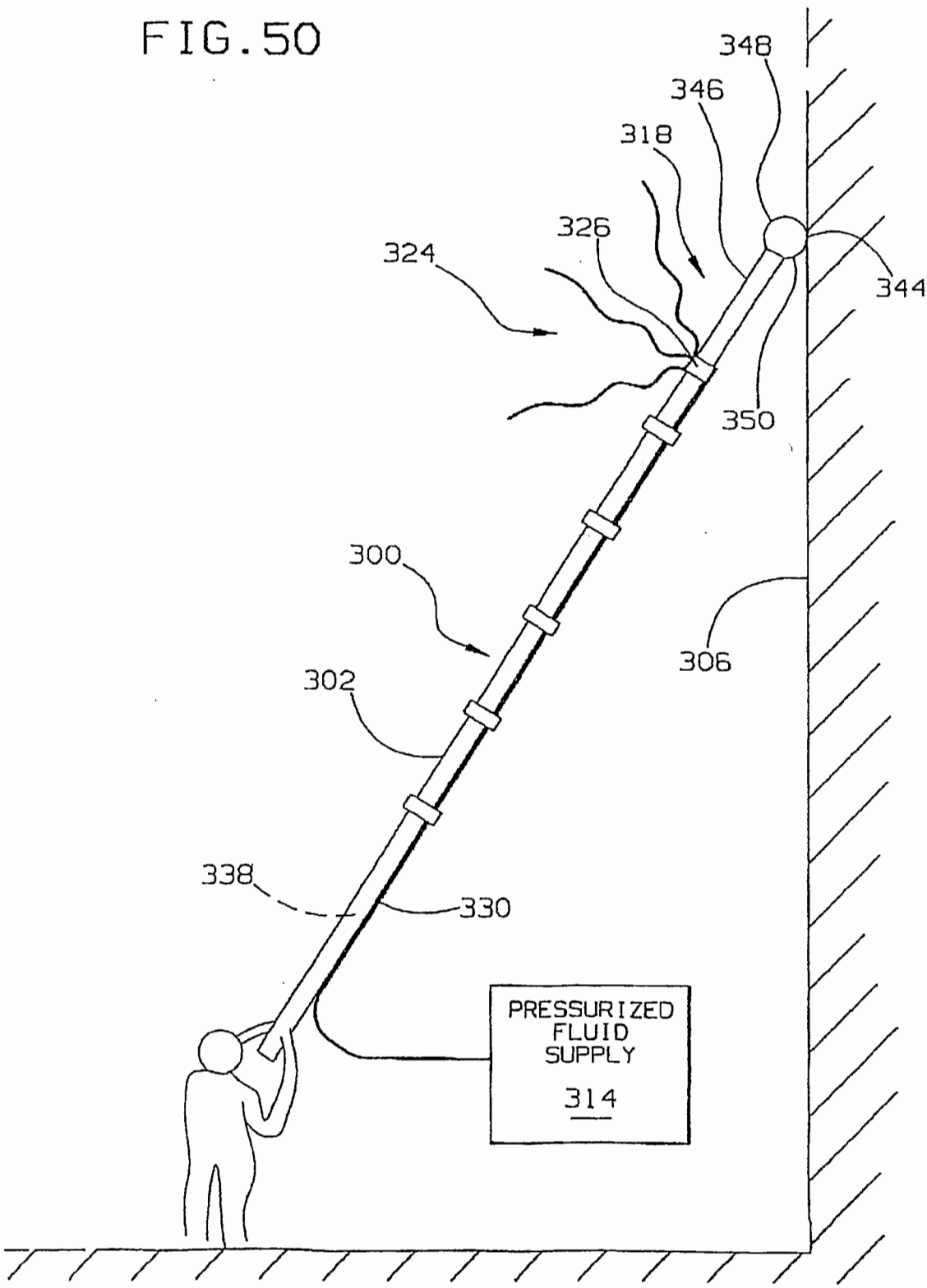
348
346
318
326
324
344
350
300
306
302
338
330
PRESSURIZED FLUID SUPPLY
314

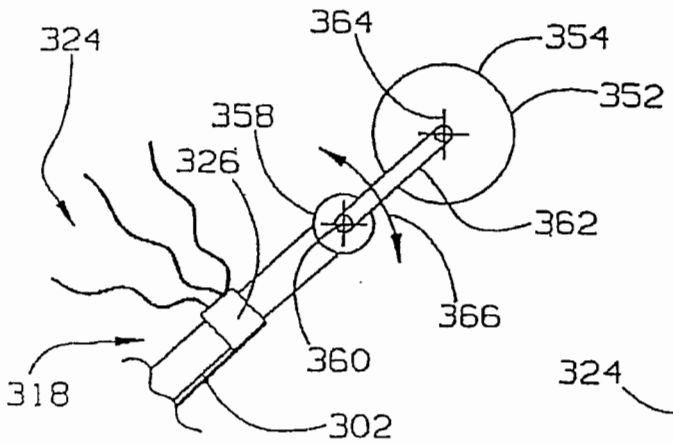

FIG. 52

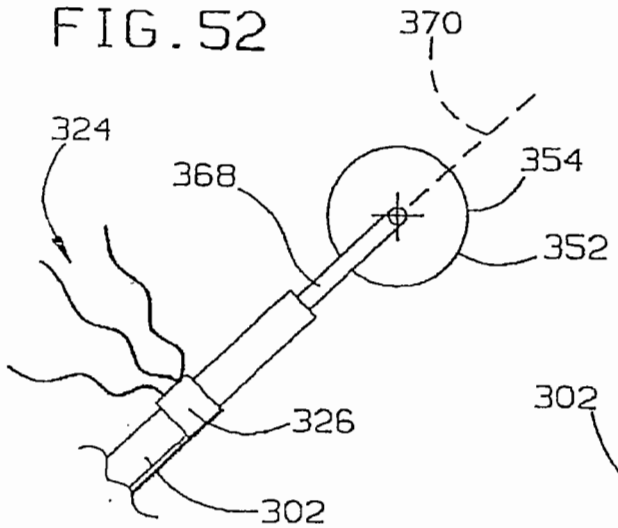

FIG. 53

FIG. 51

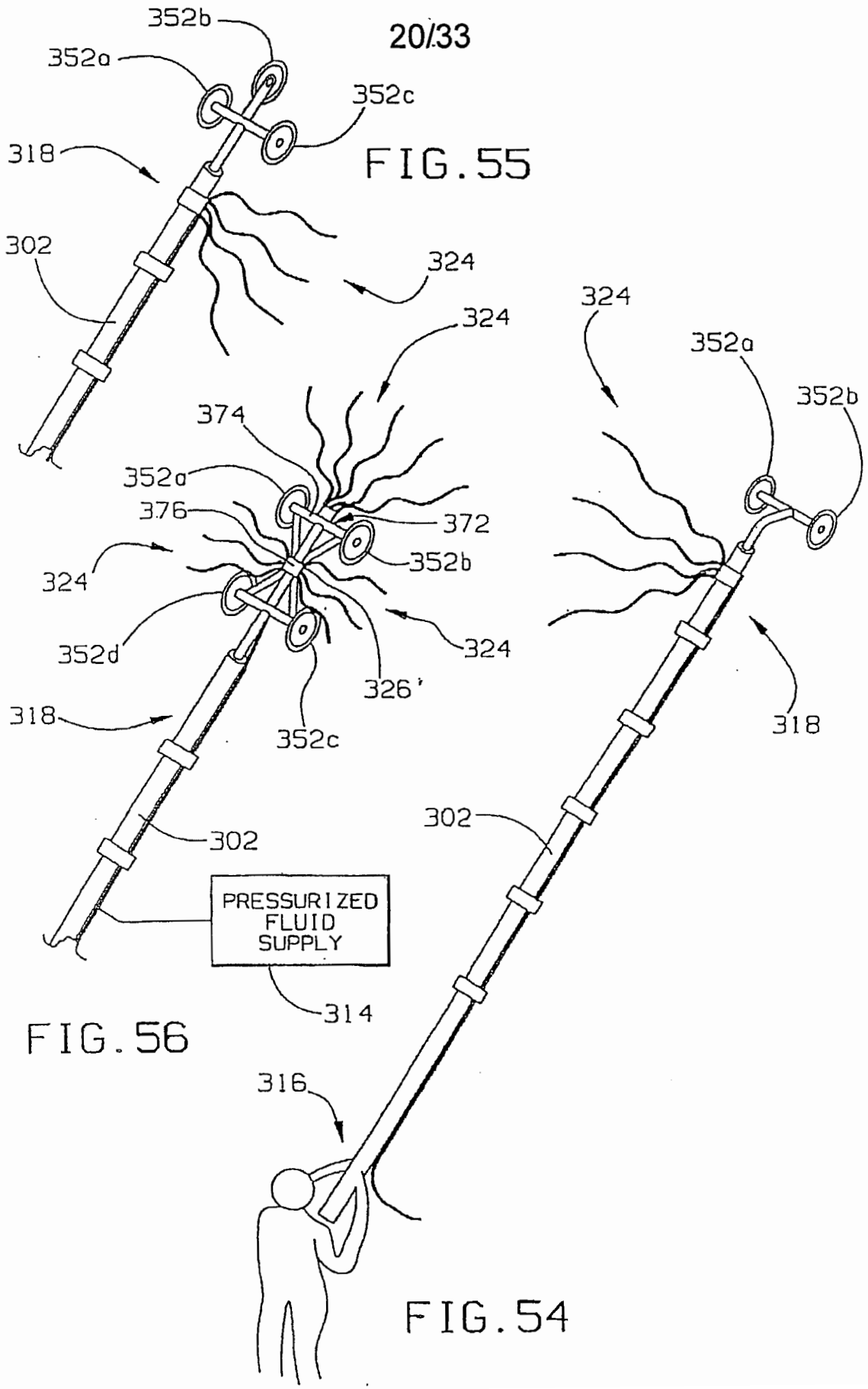

FIG. 55

FIG. 56

FIG. 54

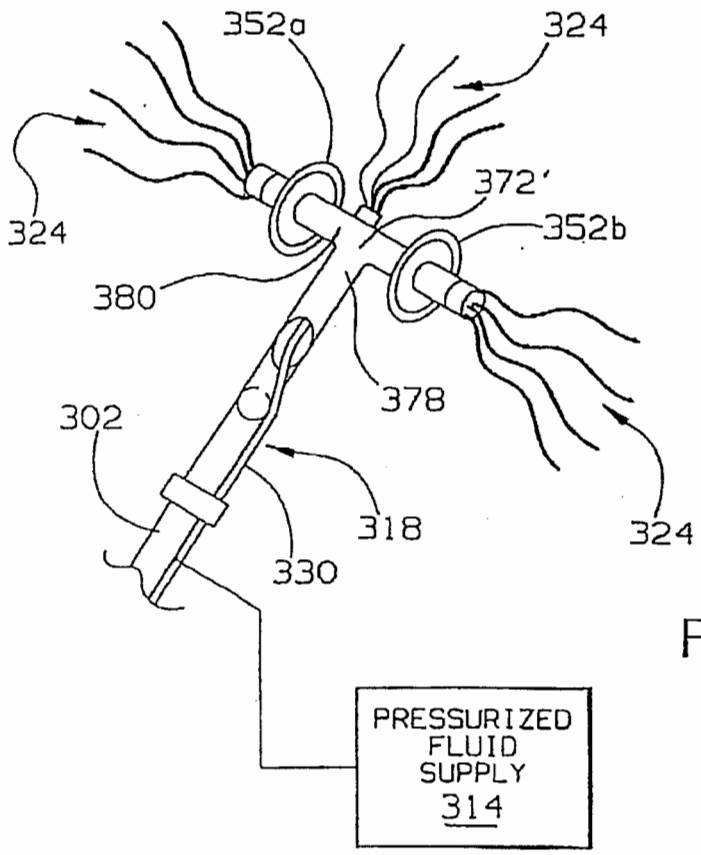
352a
324
324
372'
352b
380
378
302
318
324
330
PRESSURIZED FLUID SUPPLY 314

FIG. 57

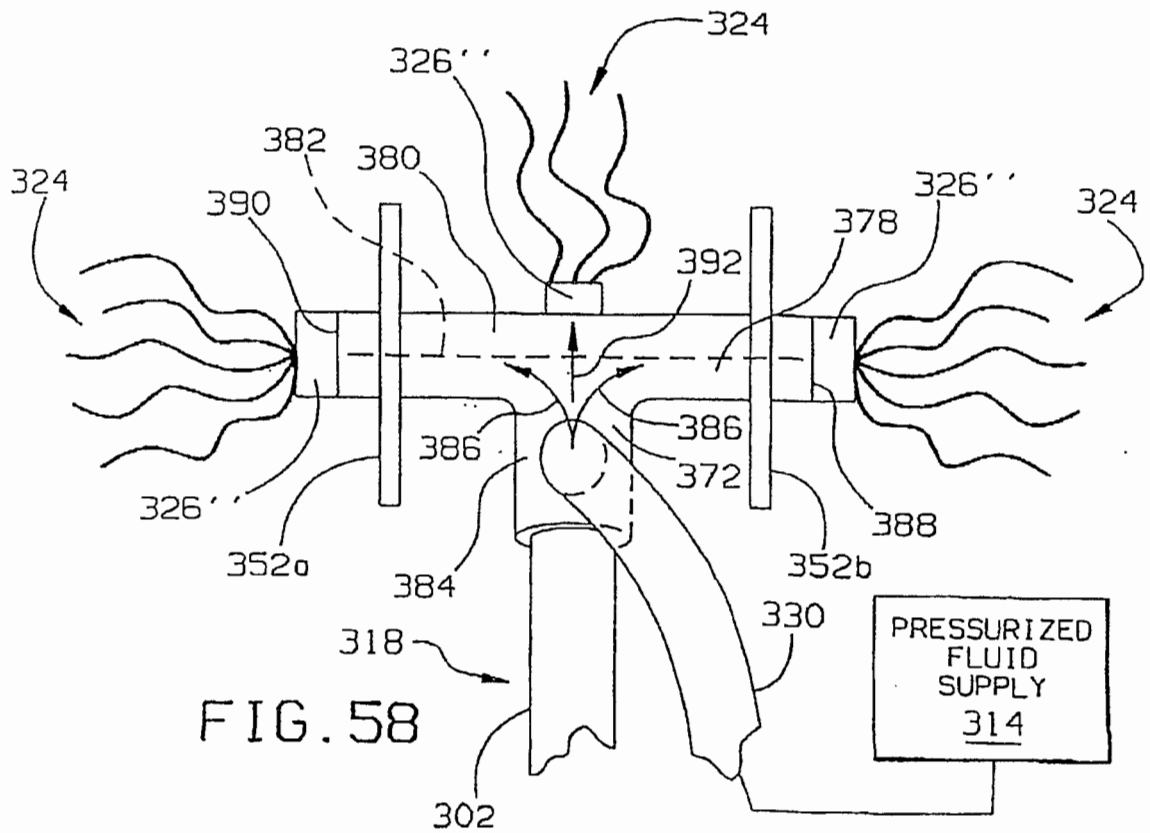
324
326''
382
380
324
390
326''
324
378
392
386
386
372
326''
388
352a
352b
384
330
318
PRESSURIZED FLUID SUPPLY 314
302

FIG. 58

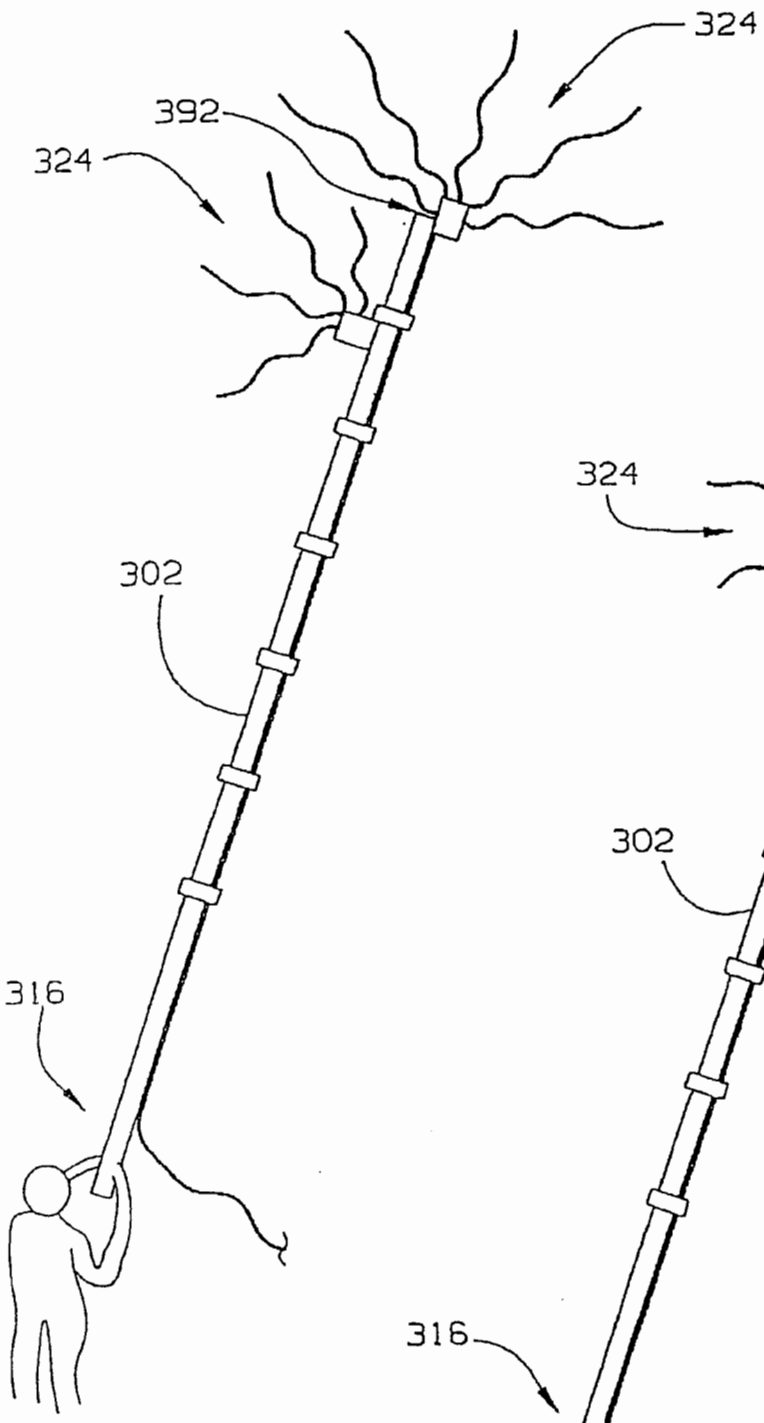

FIG.59

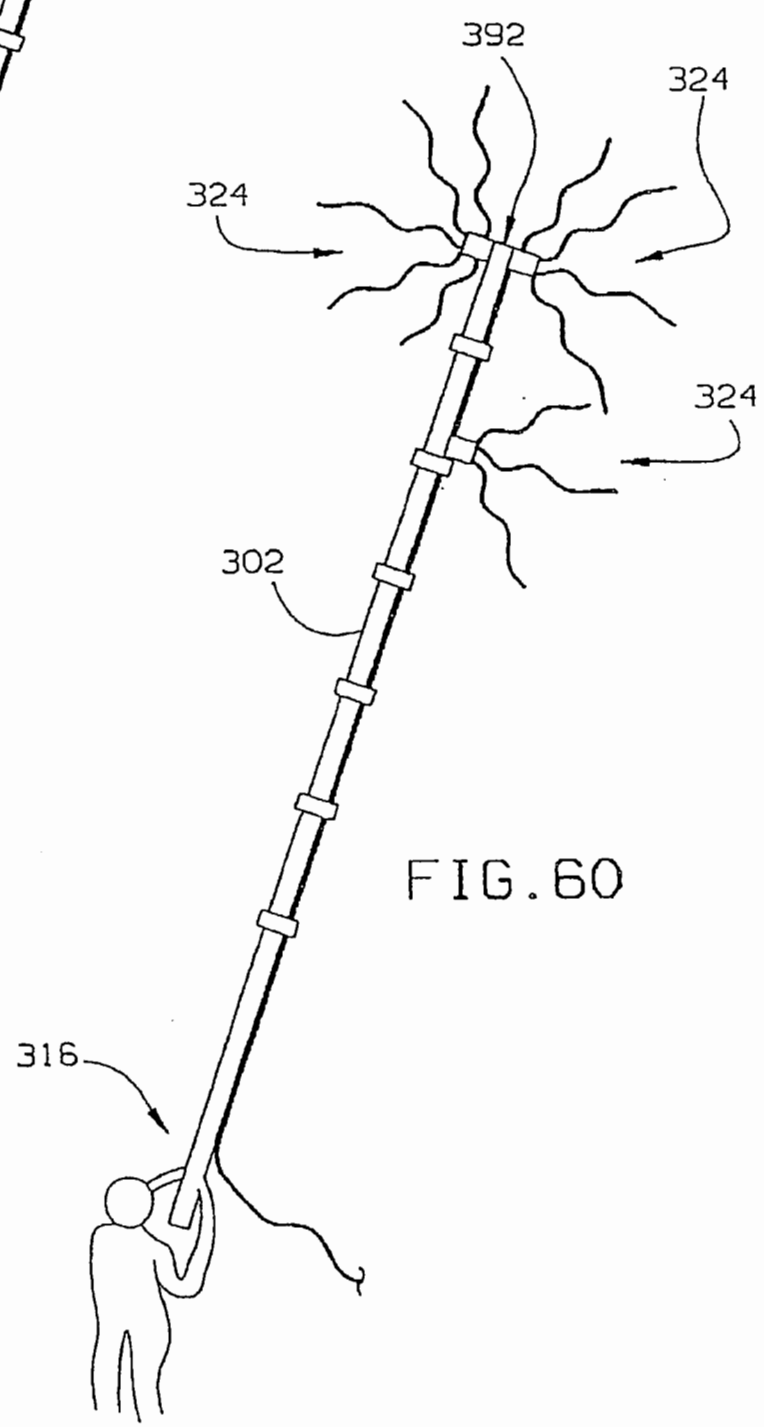

FIG.60

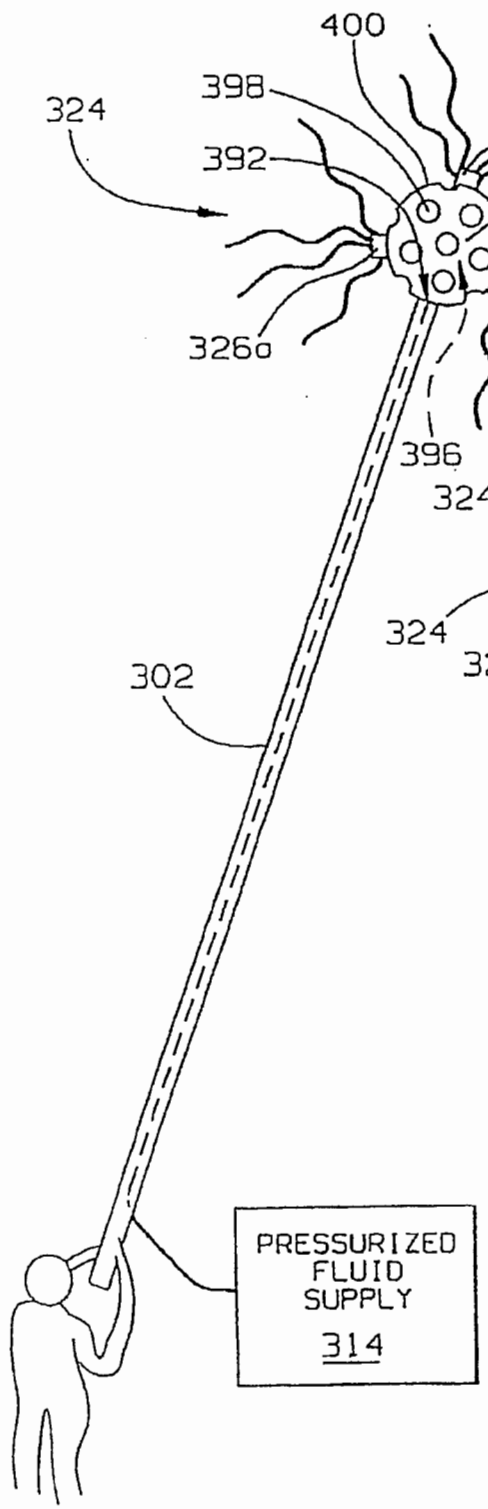
400
324
398
324
326b
392
394
326c
326a
396
324
302
PRESSURIZED FLUID SUPPLY
314

FIG.61

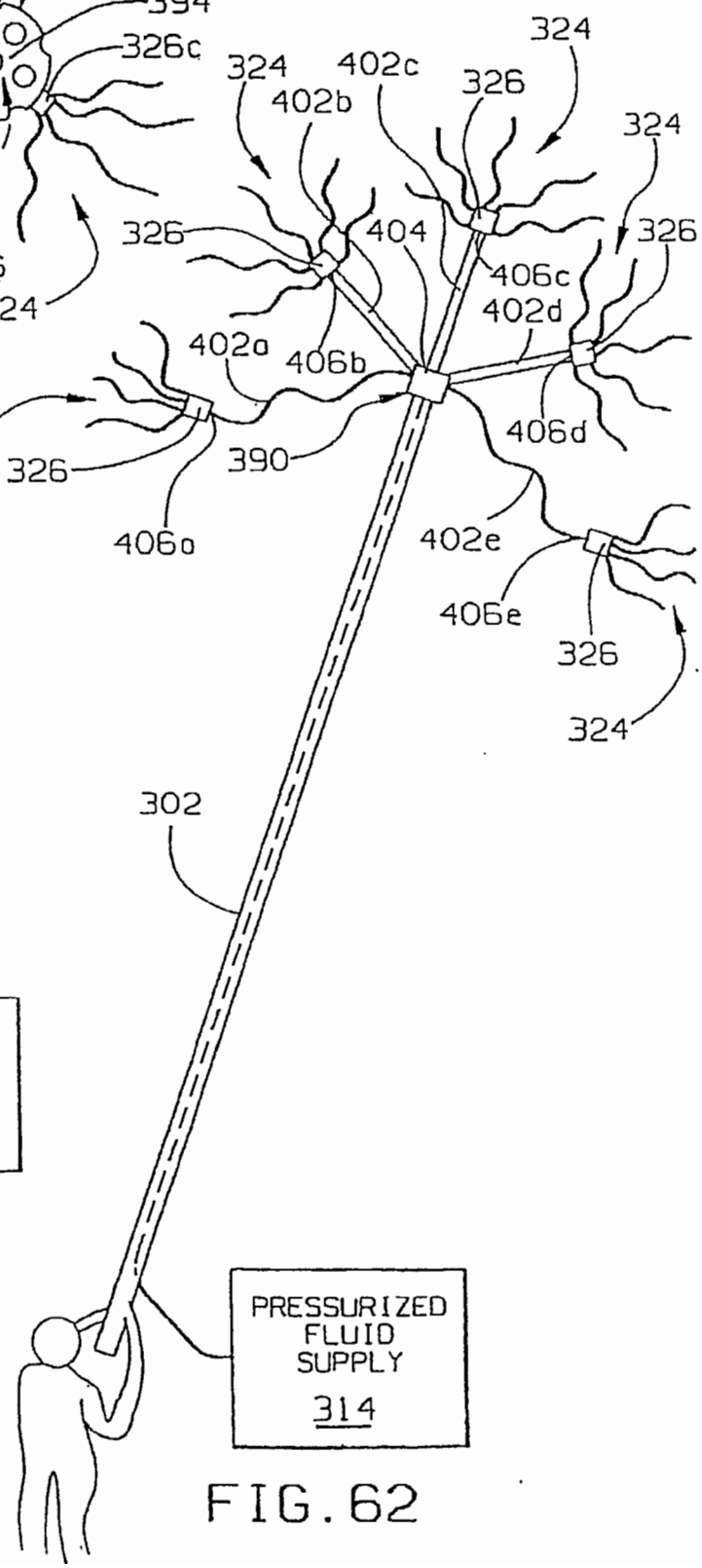
324
324
402c
326
402b
324
326
404
326
406c
402d
402a
406b
324
326
390
406d
406a
402e
406e
326
324
302
PRESSURIZED FLUID SUPPLY
314

FIG.62

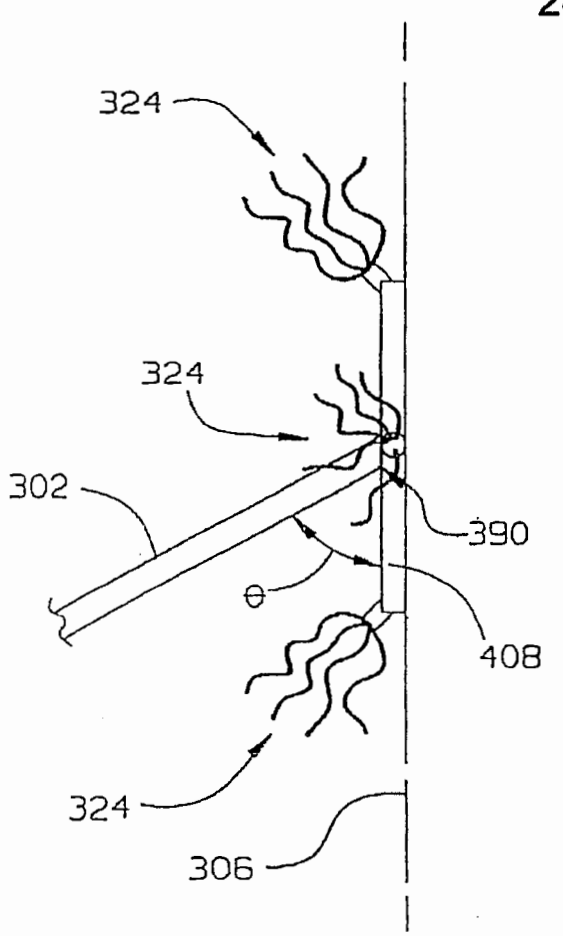
324
324
302
390
θ
408
324
306

FIG.63

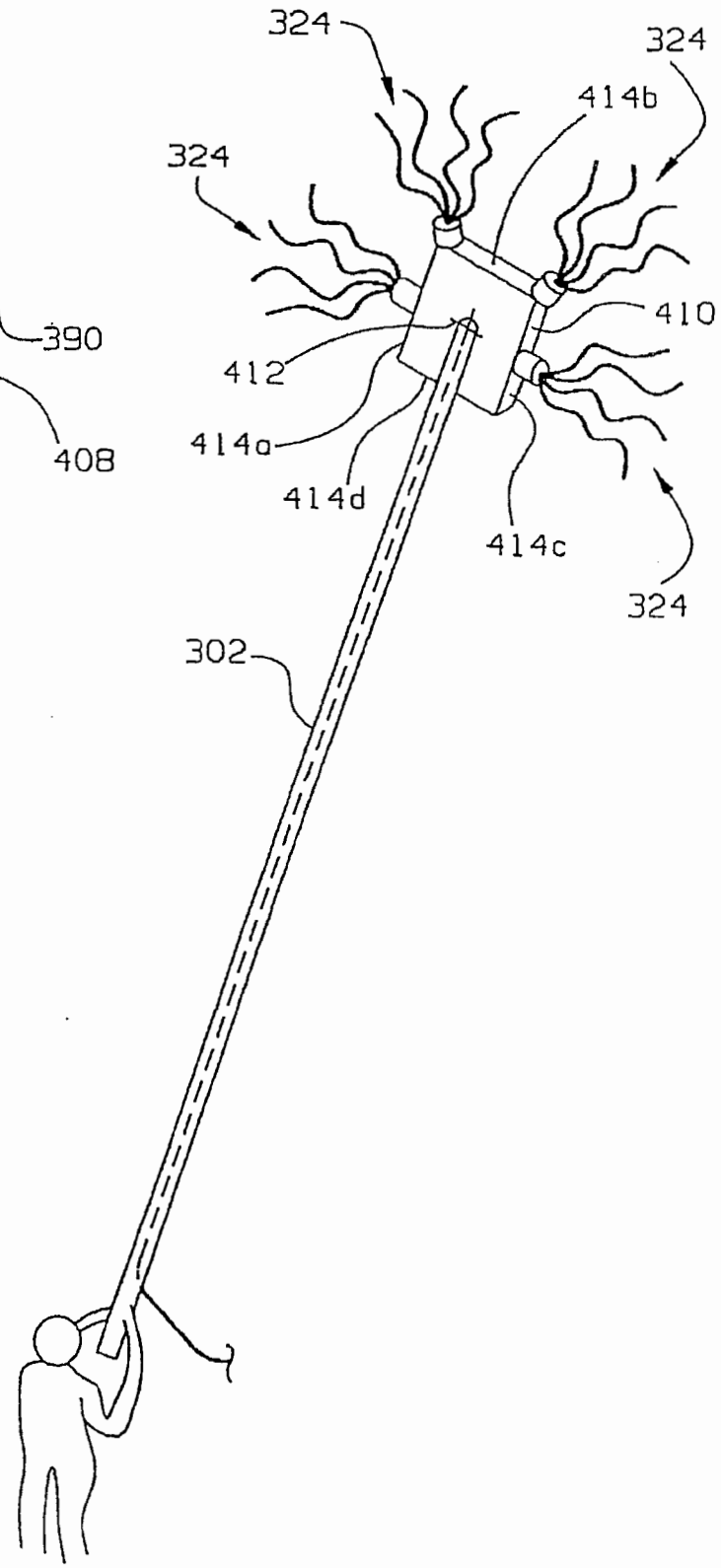
324
324
414b
324
410
412
414a
414d
414c
324
302

FIG.64

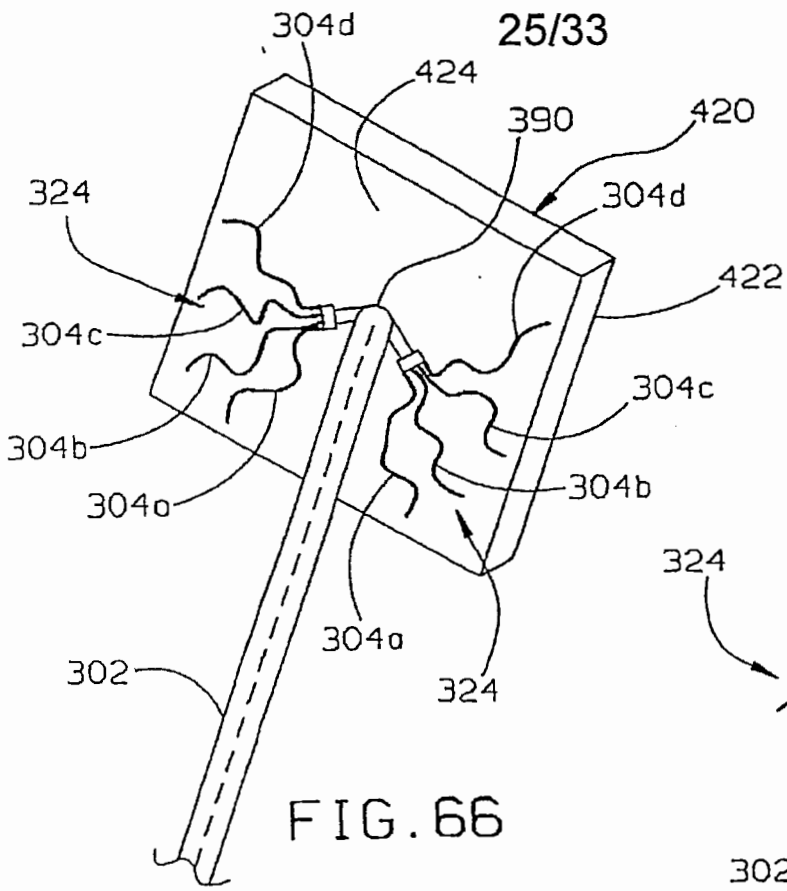

FIG. 66

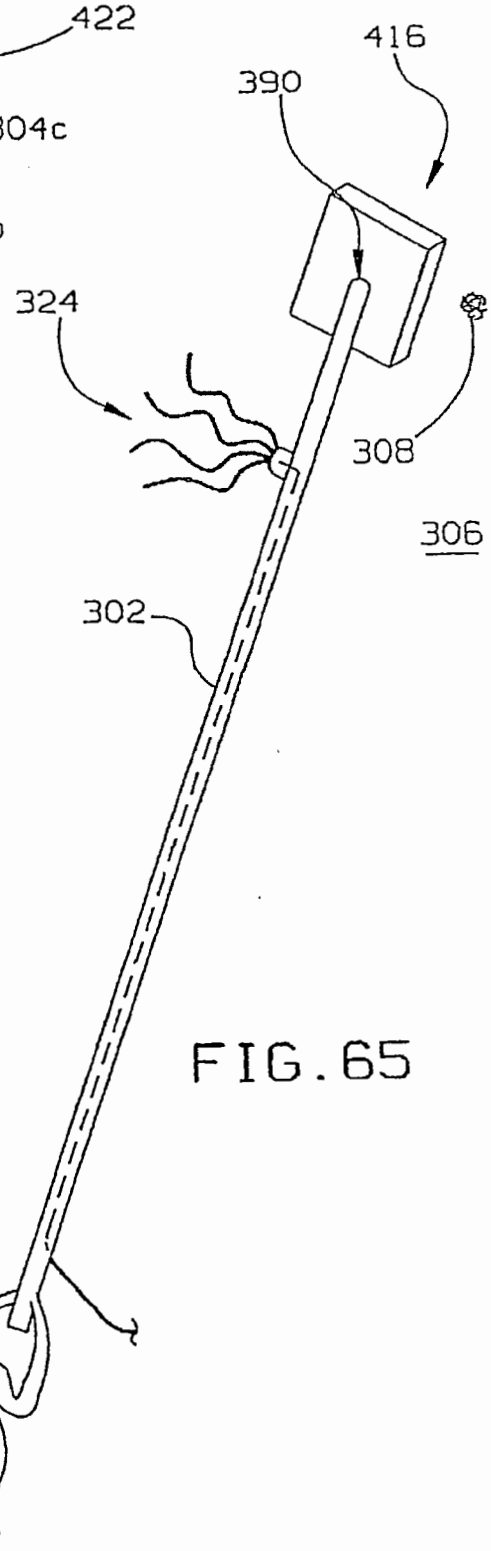

FIG. 65

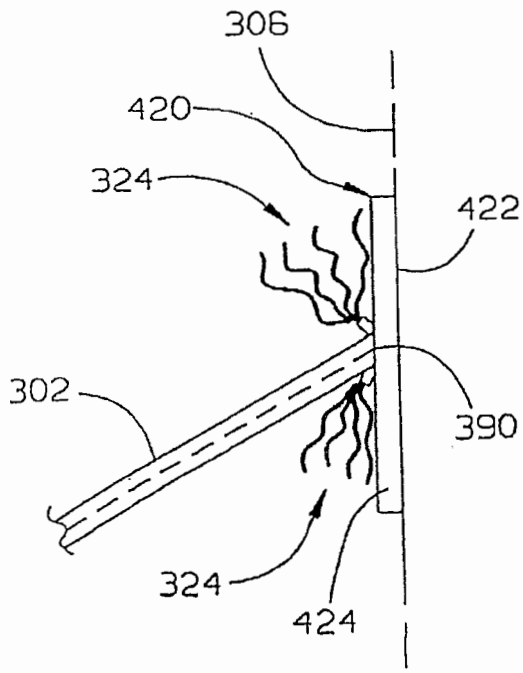

FIG. 67

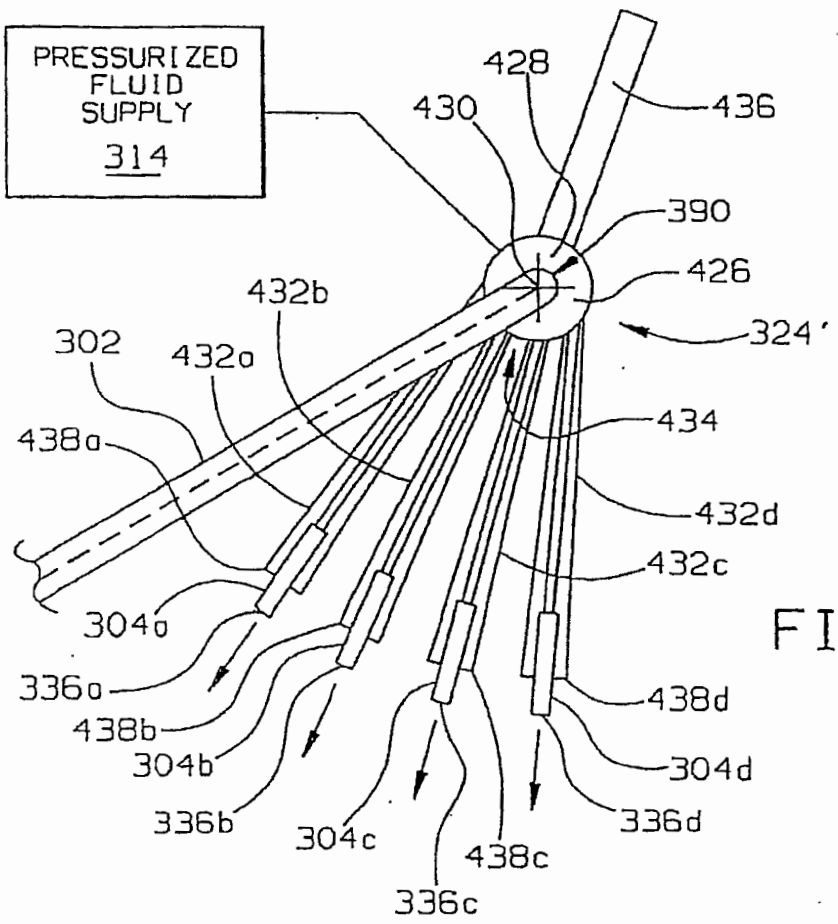
PRESSURIZED FLUID SUPPLY
314
428
430
436
390
426
432b
302
432a
324'
434
438a
432d
432c
304a
336a
438b
304b
336b
304c
438c
336c
438d
304d
336d

FIG. 68

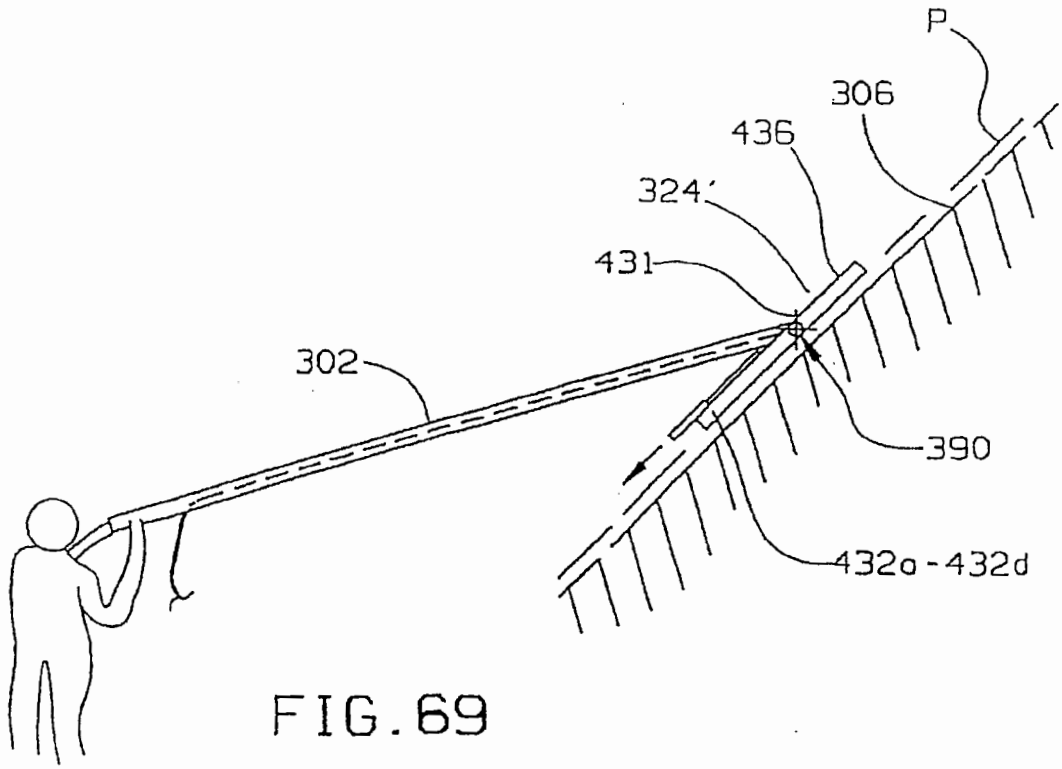
P
306
436
324'
431
302
390
432a - 432d

FIG. 69

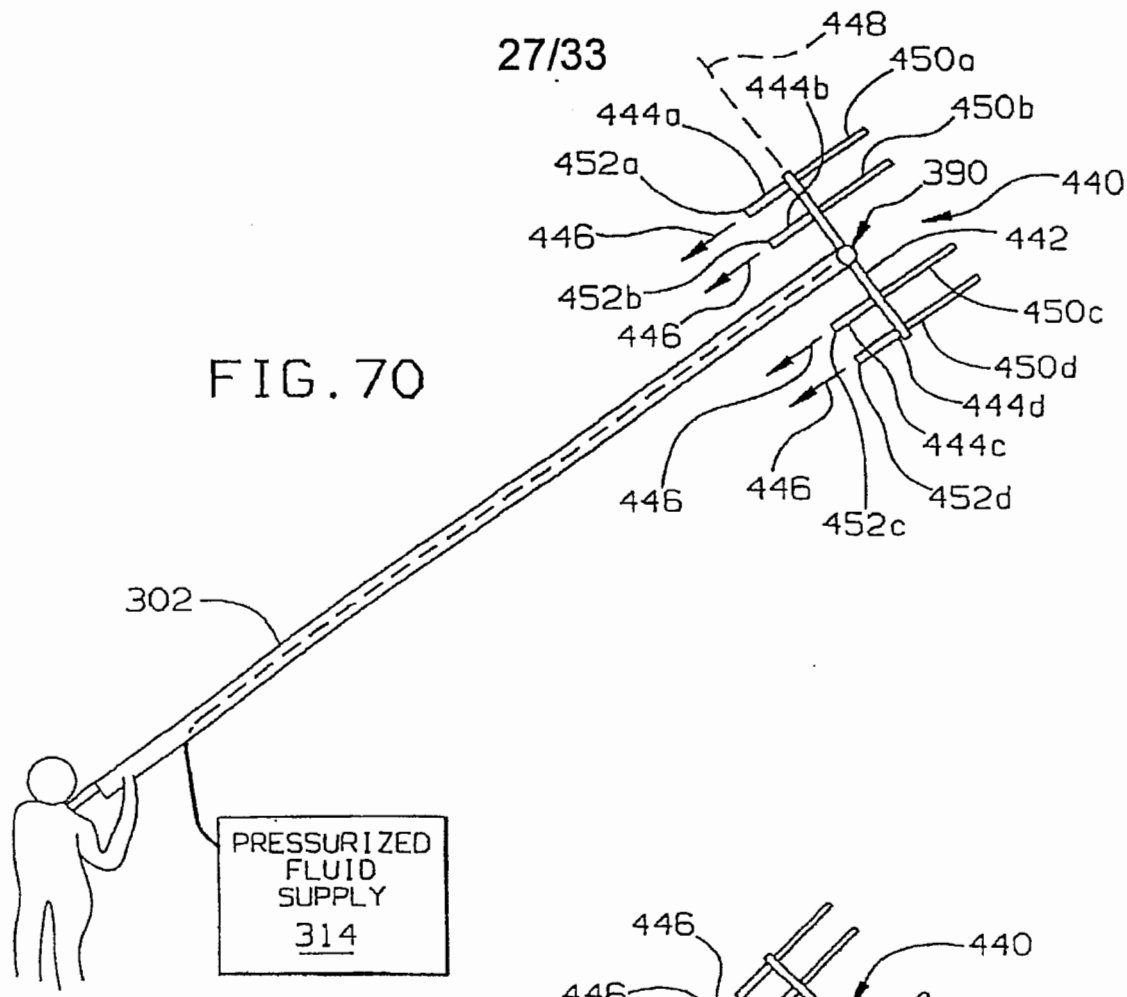
448
450a
444b
444a
450b
452a
390
440
446
442
452b
450c
446
450d
444d
444c
446
446
452d
452c
302
PRESSURIZED FLUID SUPPLY
314

FIG. 70

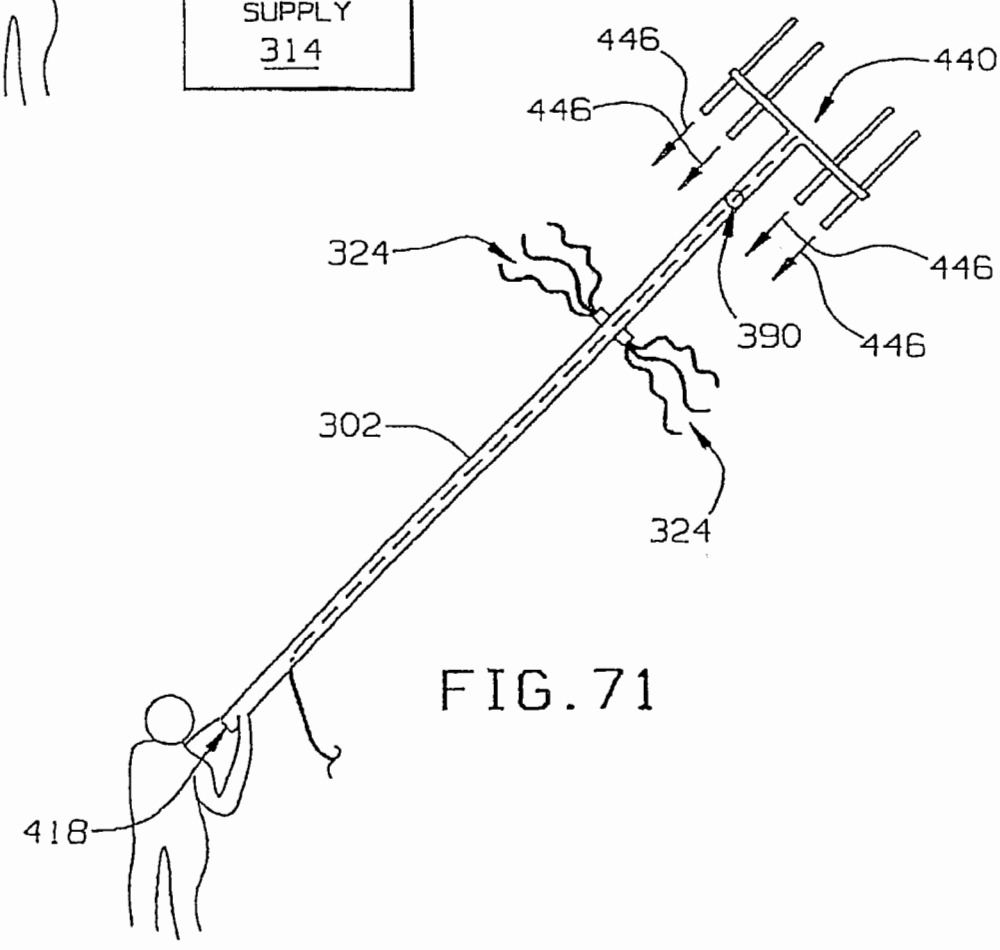
446
440
446
324
446
390
446
302
324
418

FIG. 71

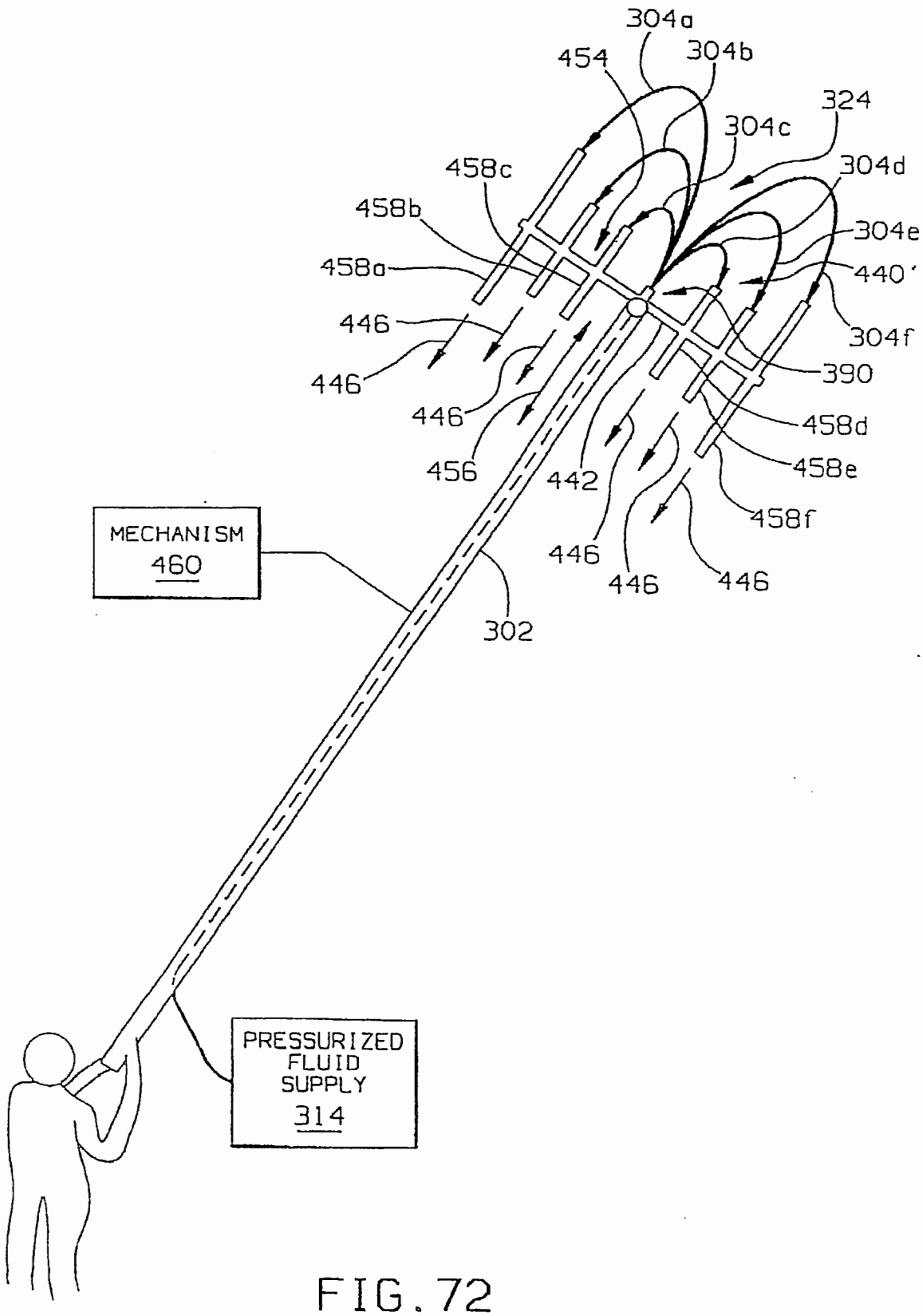
304a
454
304b
324
304c
458c
304d
458b
304e
458a
440'
446
304f
446
390
446
458d
456
458e
442
458f
MECHANISM
460
446
446
446
302
PRESSURIZED
FLUID
SUPPLY
314

FIG. 72

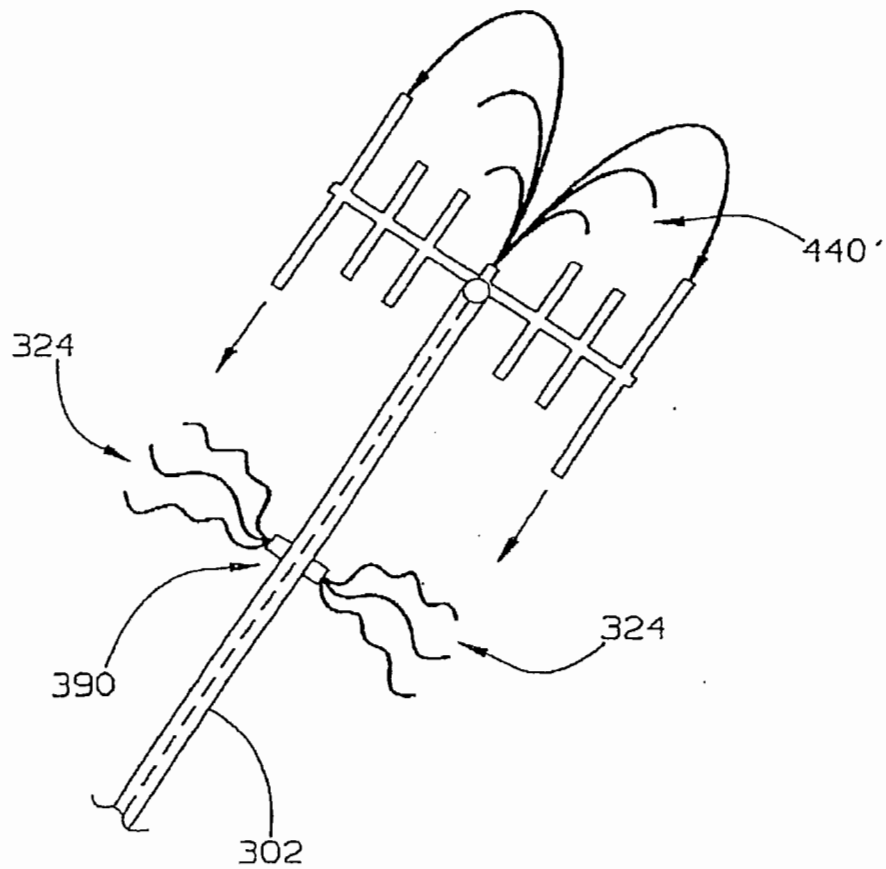
440'
324
324
390
302

FIG. 73

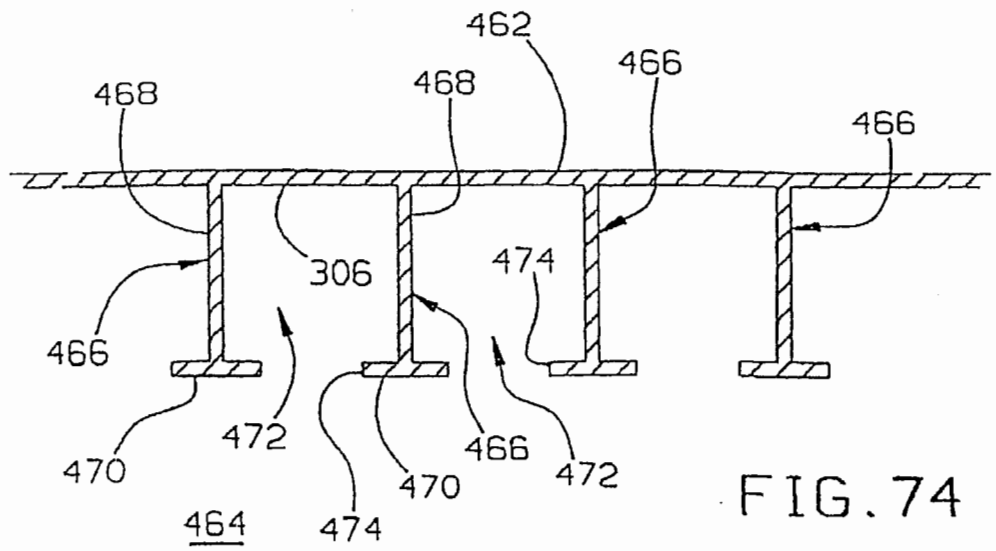
462
466
468
468
466
306
474
466
470
472
466
470
472
474
464

FIG. 74

FIG. 75

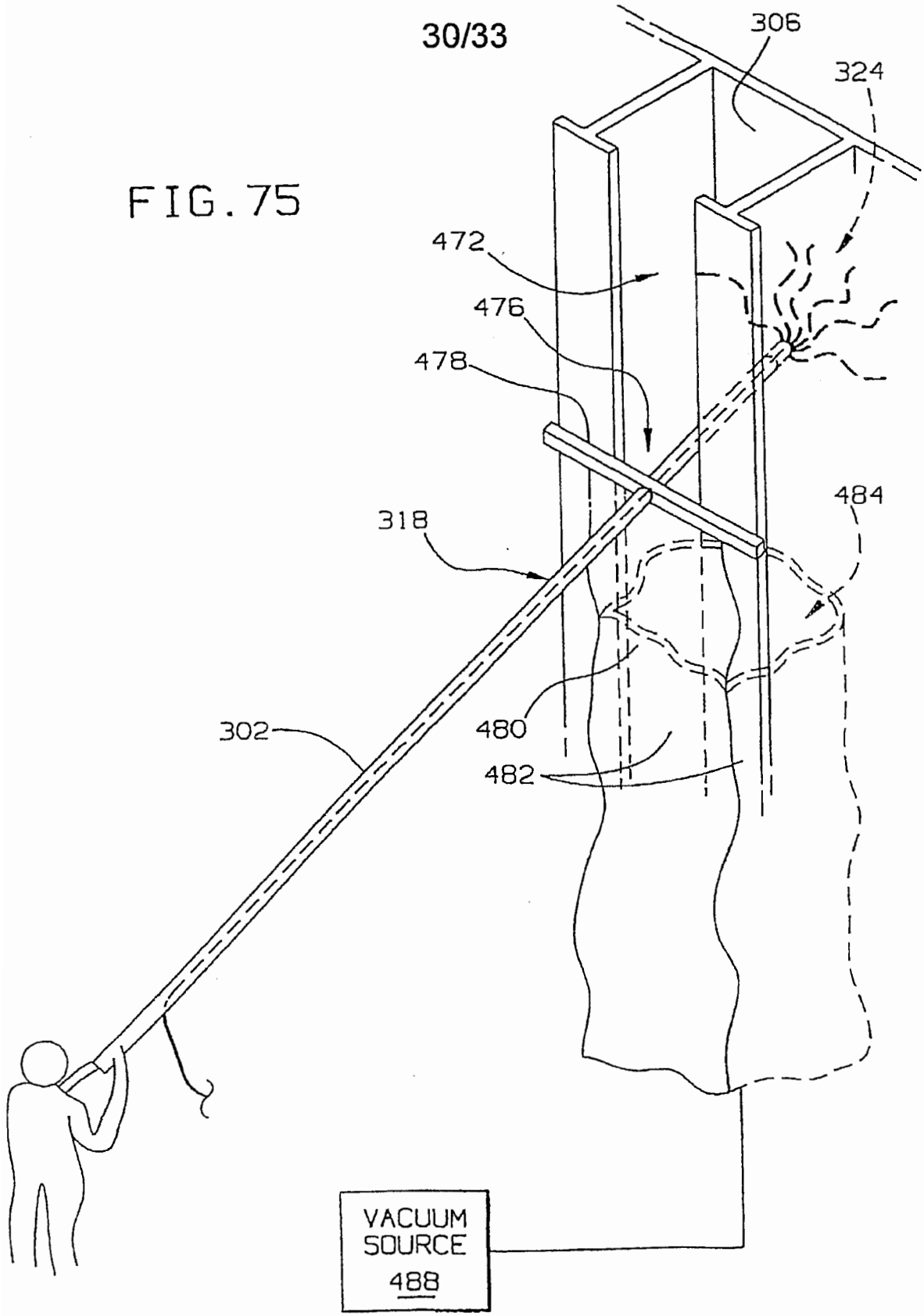

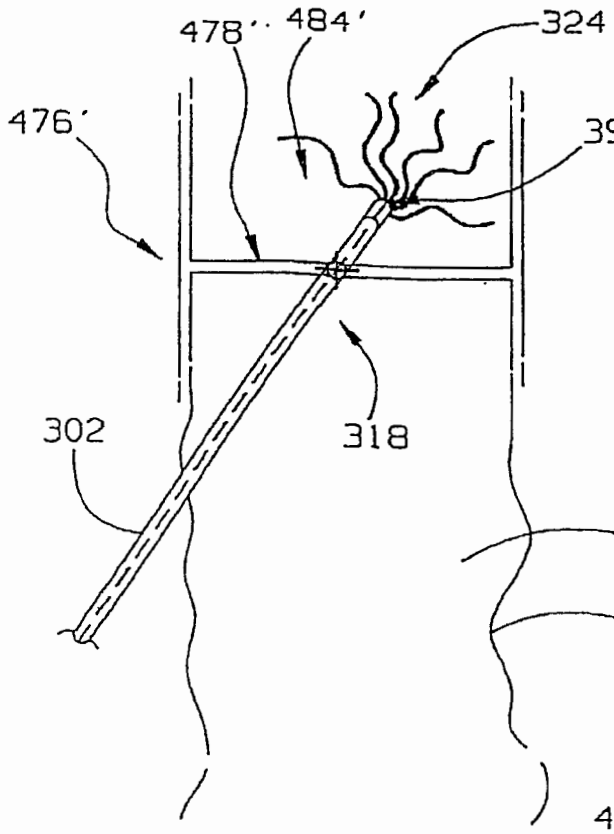
478'
484'
324
476'
390
302
318
480'
482'

FIG. 76

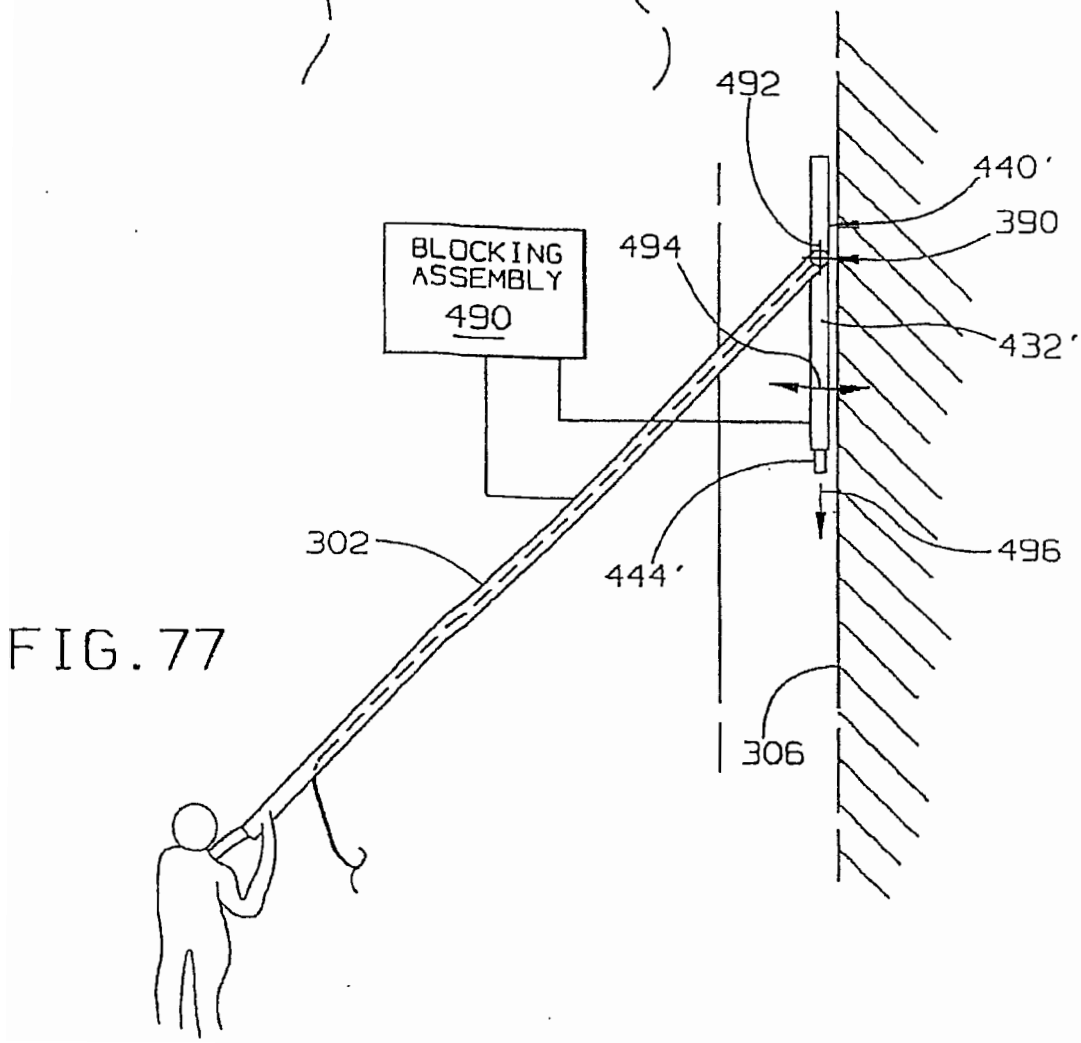
492
440'
390
494
BLOCKING ASSEMBLY 490
432'
302
444'
496
306

FIG. 77

FIG. 78

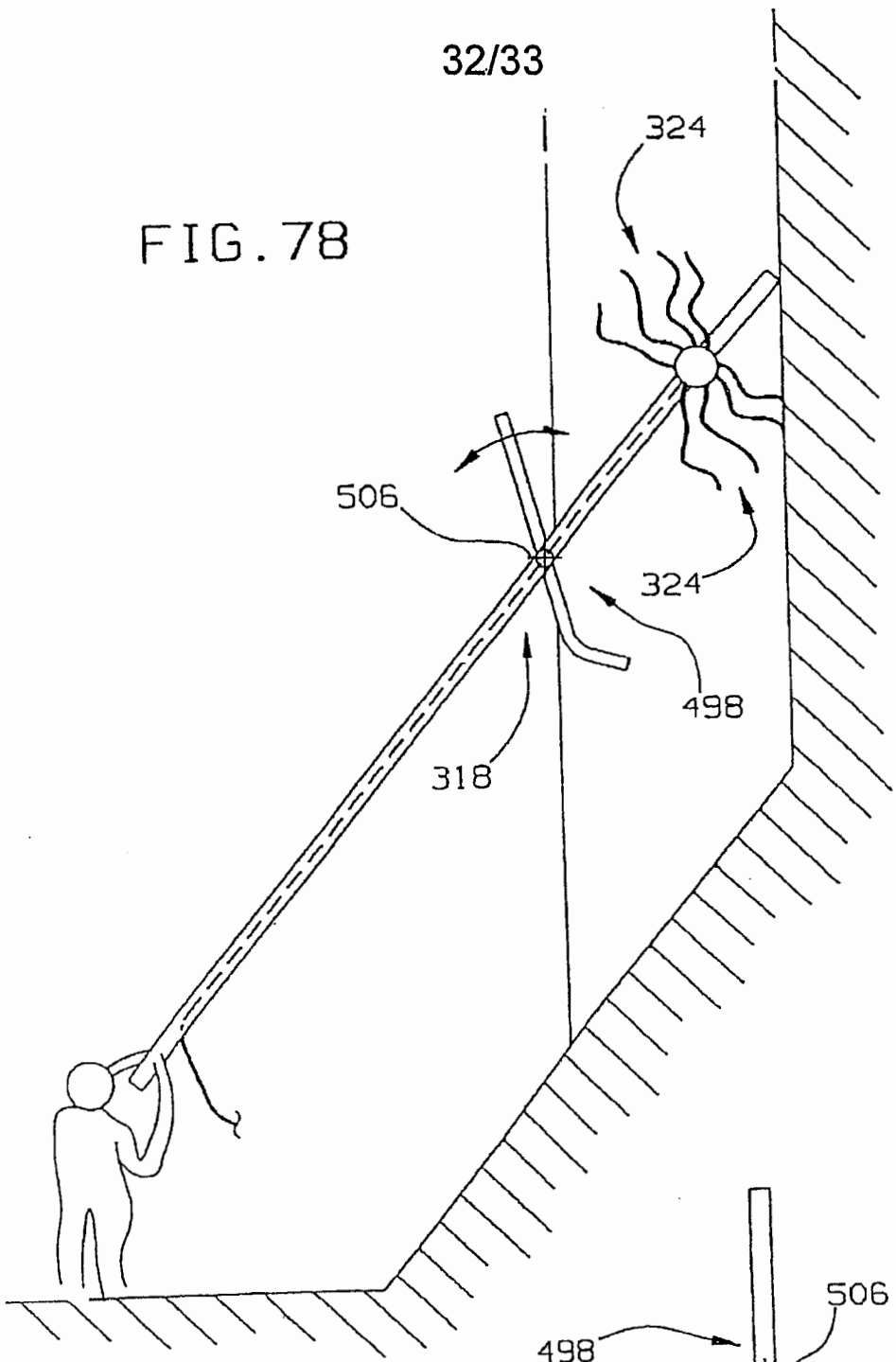

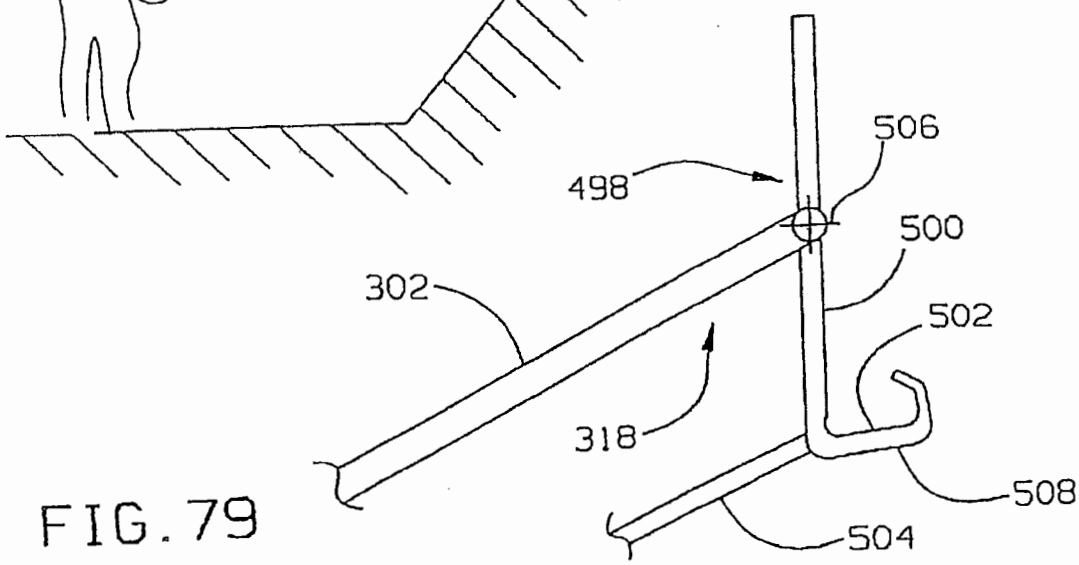

FIG. 79

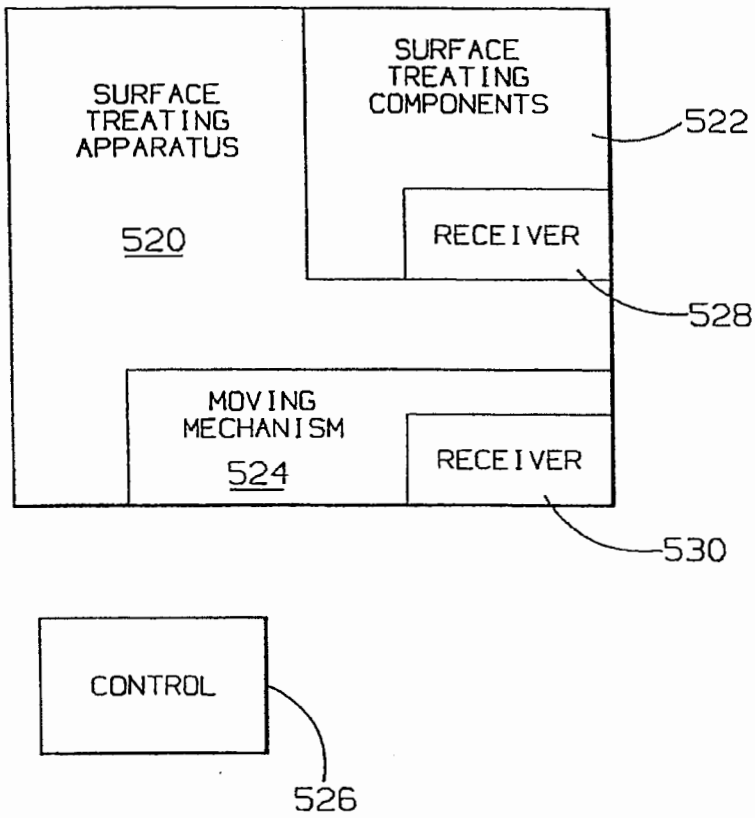
SURFACE TREATING APPARATUS
520
SURFACE TREATING COMPONENTS
522
RECEIVER
528
MOVING MECHANISM
524
RECEIVER
530
CONTROL
526

FIG. 80