FIG. 1

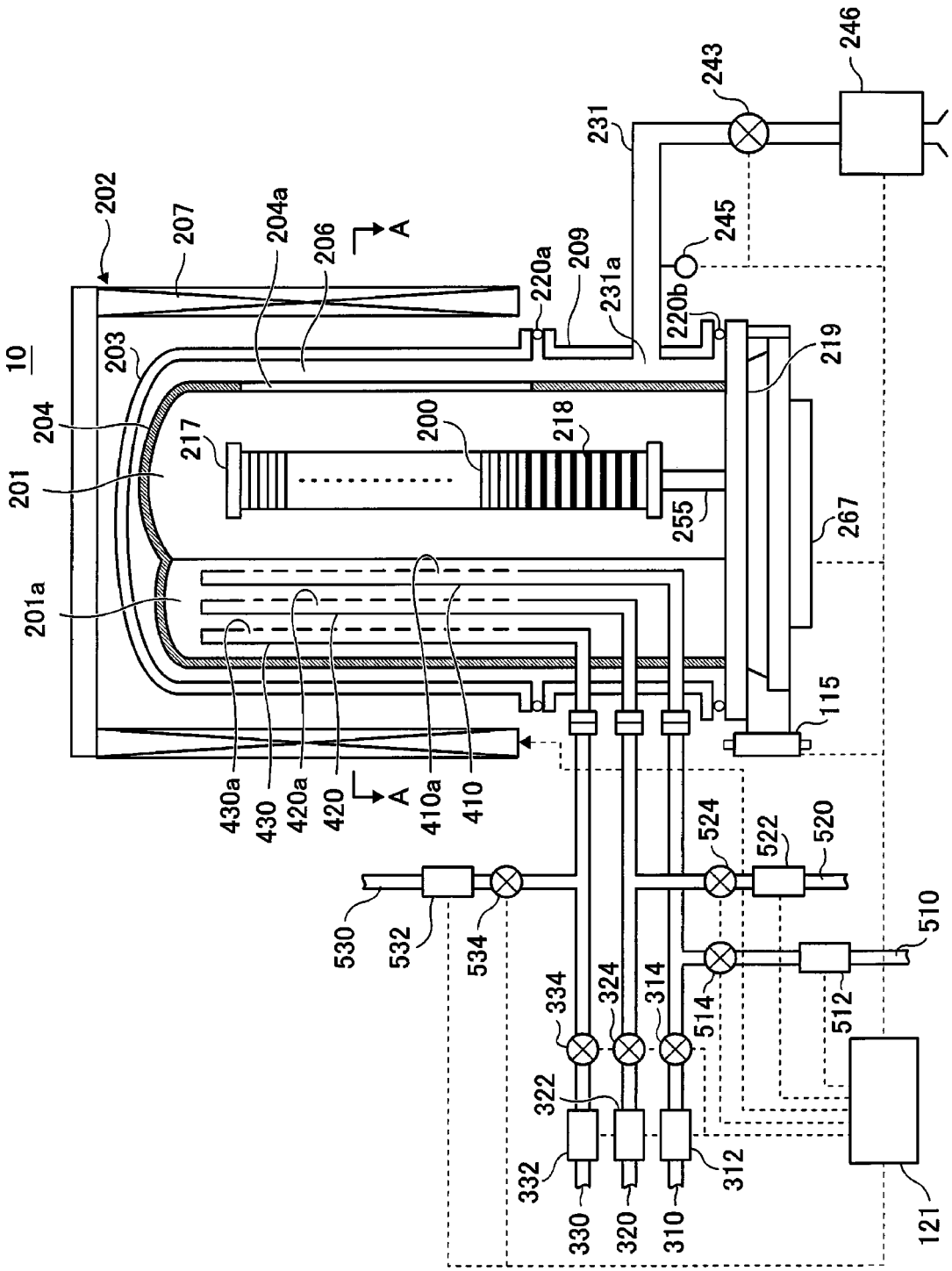
10
202
207
204a
206
A
203
204
201
201a
217
200
218
220a
209
231a
231
243
246
245
220b
219
255
267
115
430a
430
420a
420
A
410a
410
524
522
520
530
532
534
510
334
324
314
514
512
322
332
312
330
320
310
121

FIG. 2

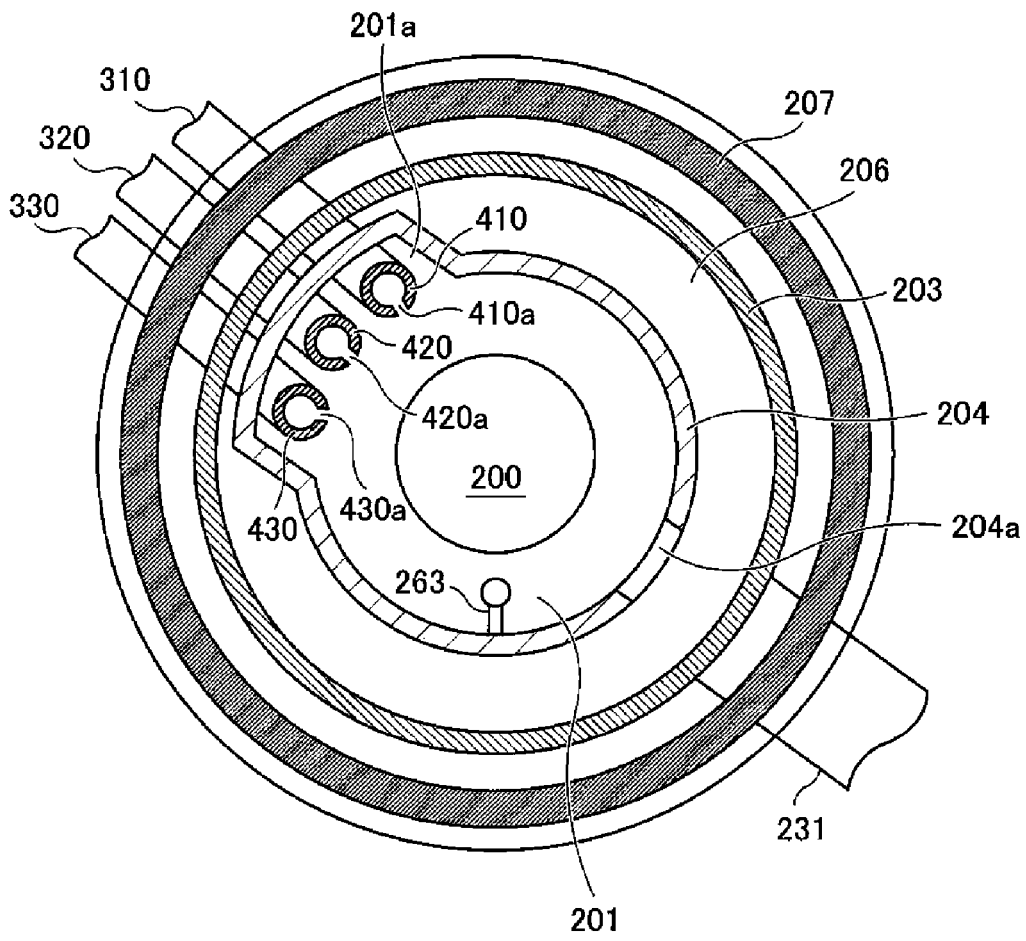
202
201a
310
320
330
207
206
410
410a
203
420
420a
204
200
430
430a
204a
263
231
201

FIG. 3

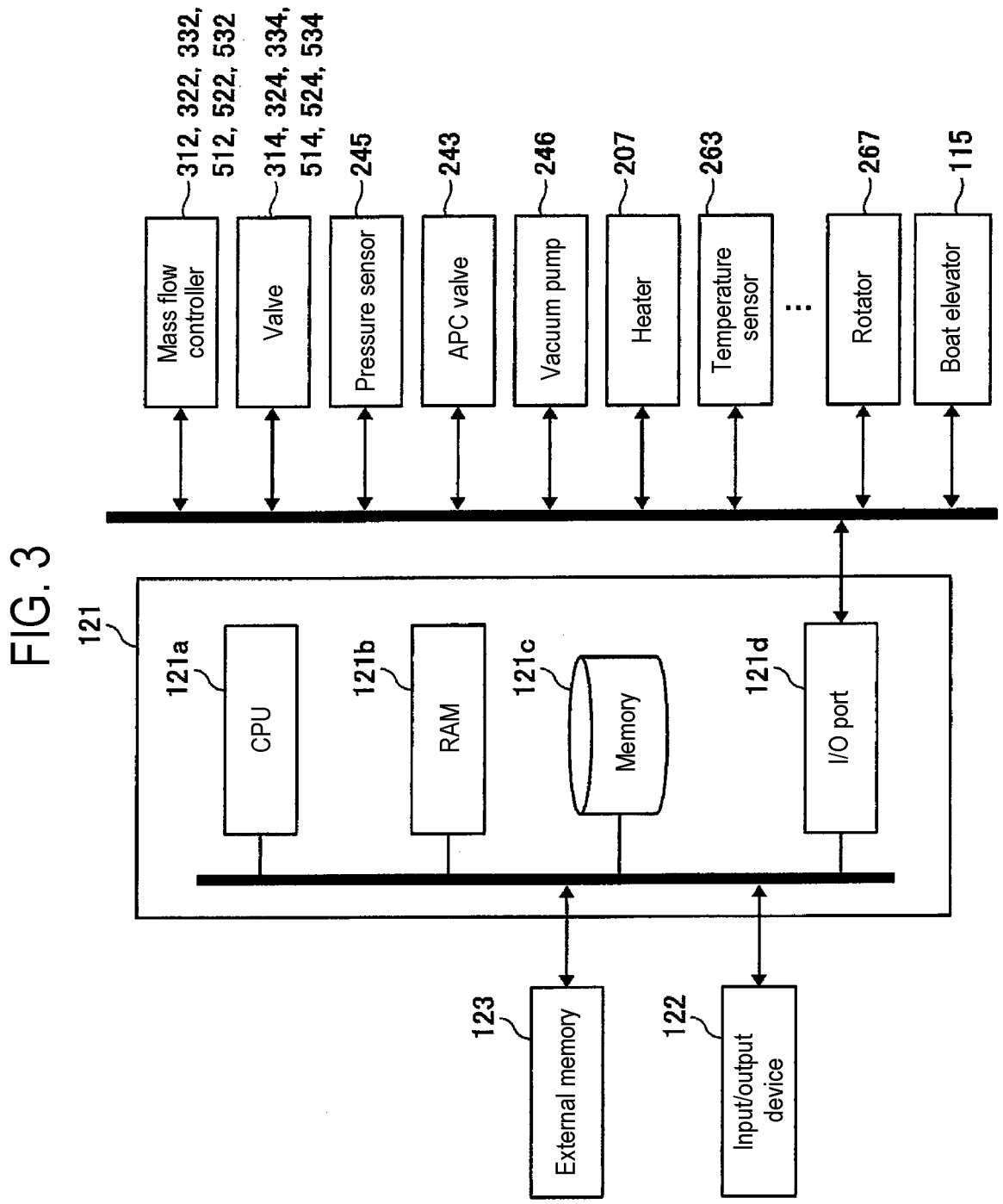
312, 322, 332,
512, 522, 532
314, 324, 334,
514, 524, 534
245
243
246
207
263
267
115
Mass flow controller
Valve
Pressure sensor
APC valve
Vacuum pump
Heater
Temperature sensor
Rotator
Boat elevator
121
121a
CPU
121b
RAM
121c
Memory
121d
I/O port
123
External memory
122
Input/output device

FIG. 4A

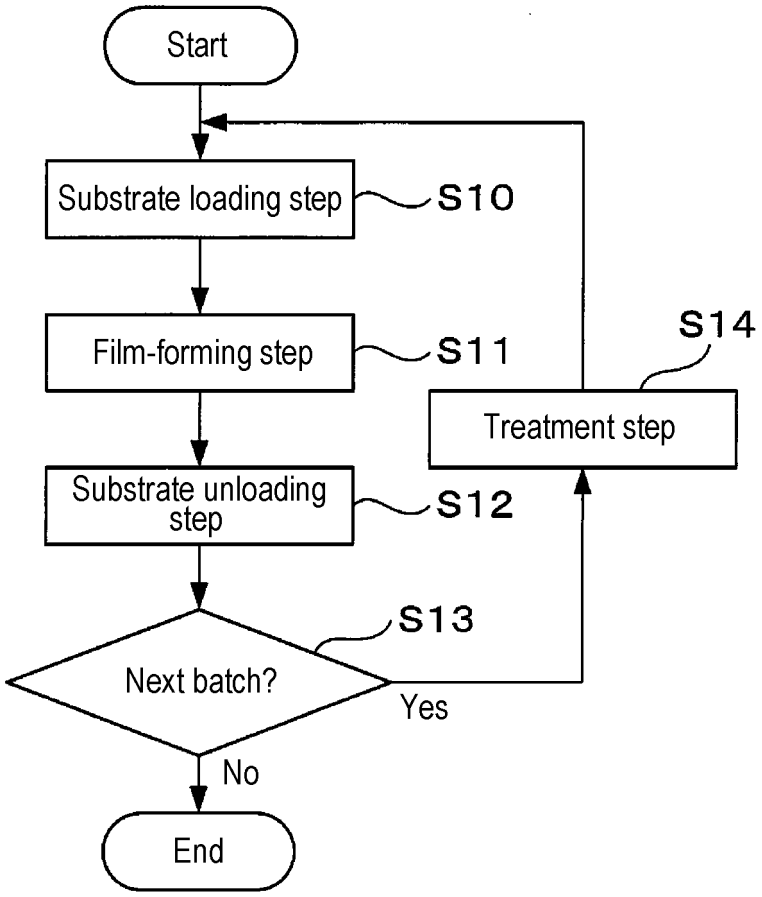
Start
Substrate loading step
S10
Film-forming step
S11
Substrate unloading step
S12
Next batch?
S13
Yes
No
End
Treatment step
S14

FIG. 4B

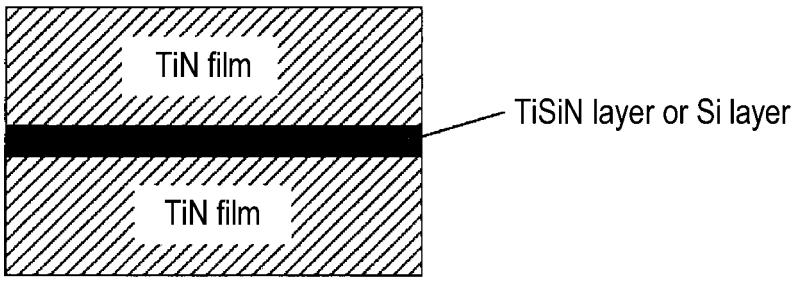
TiN film
TiSiN layer or Si layer
TiN film

FIG. 5A

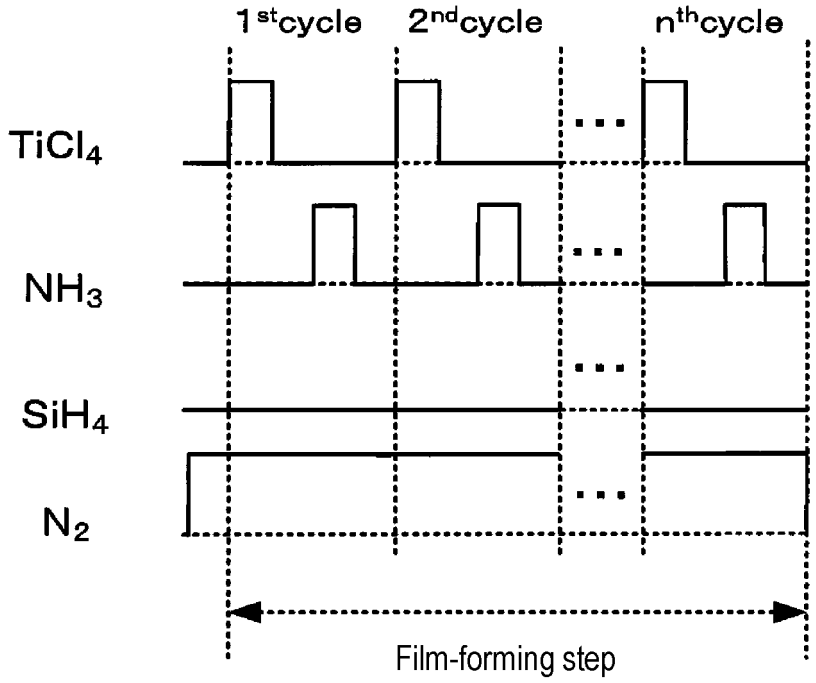
1stcycle
2ndcycle
nthcycle
TiCl4
NH3
SiH4
N2
Film-forming step

FIG. 5B

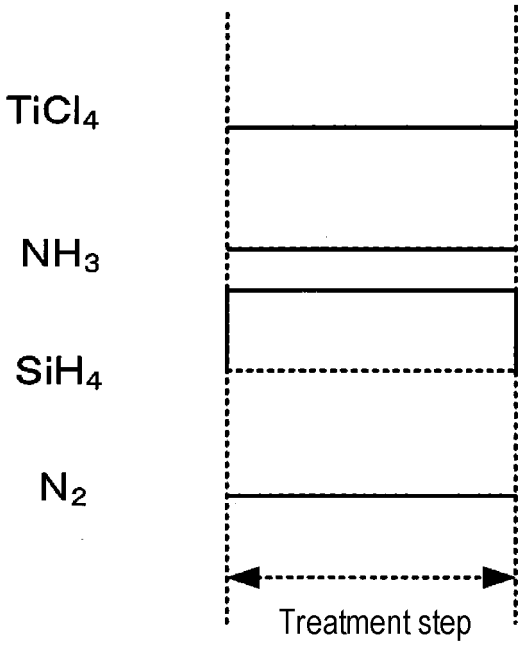
TiCl4
NH3
SiH4
N2
Treatment step

FIG. 6A

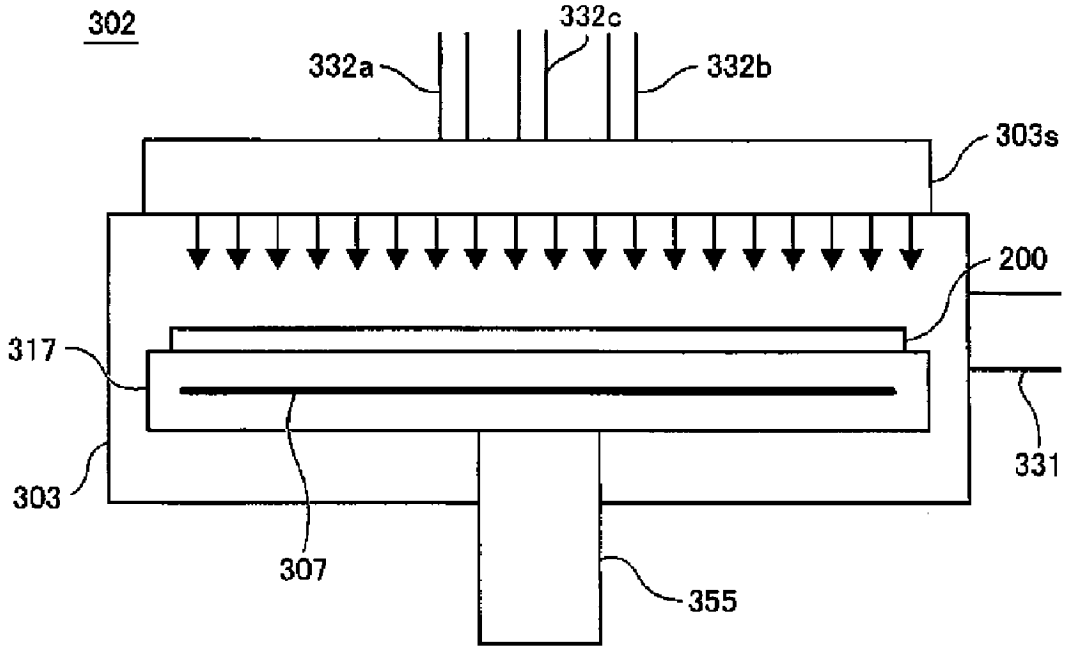
302
332c
332a
332b
303s
200
317
331
303
307
355

FIG. 6B

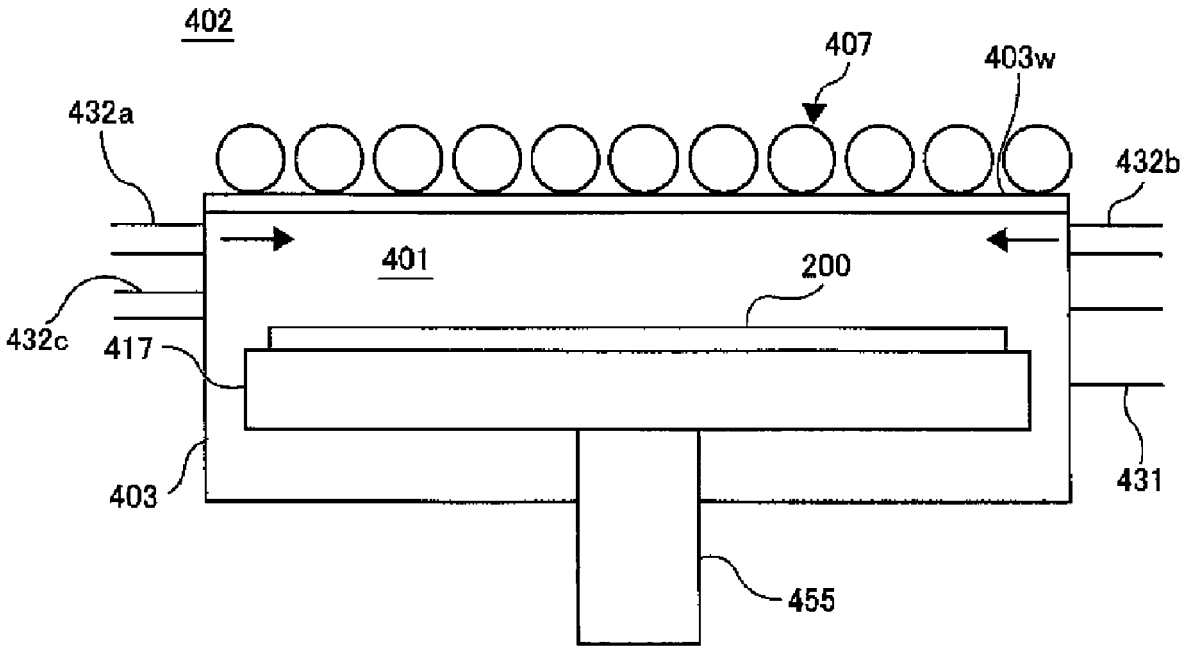
402
407
403w
432a
432b
401
200
432c
417
403
431
455

FIG. 7

		Comparative example	First example	Second example
		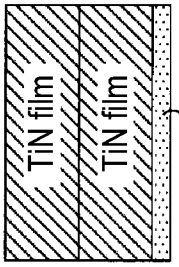	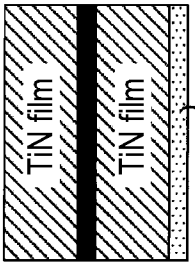	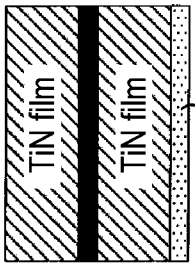
Rms (nm)	1. 62	13. 6	2. 16	3. 28
Rmax (nm)	25. 7	85. 5	22. 9	32. 3