FIG. 1
Prior Art

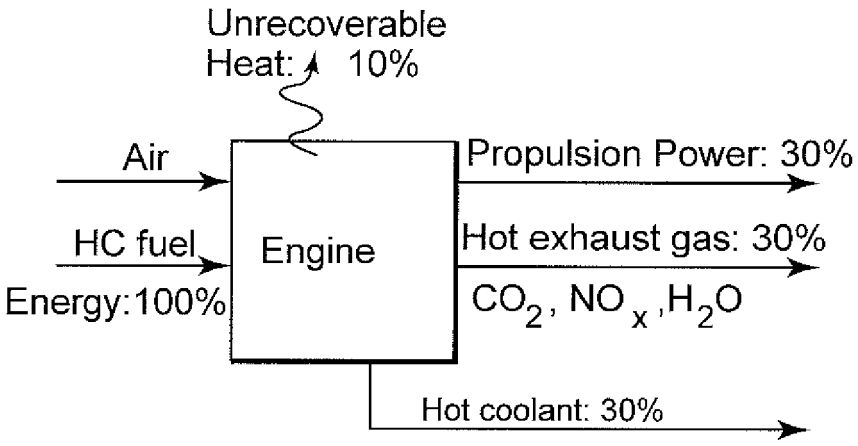

FIG. 2

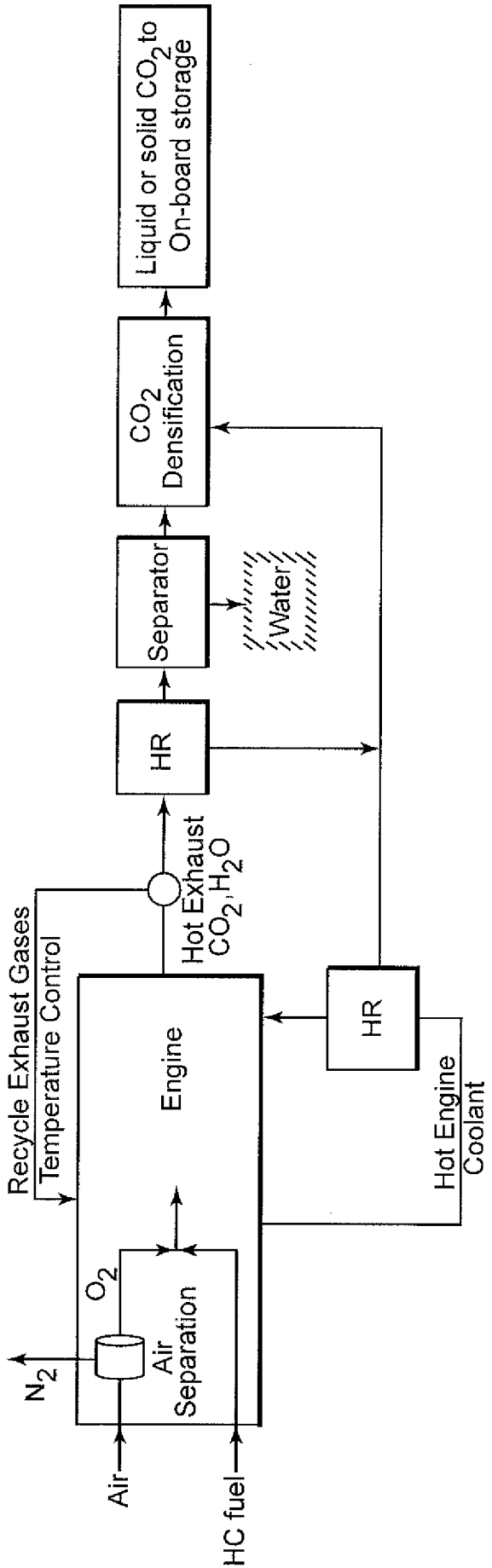
Liquid or solid CO_2 to On-board storage
CO_2 Densification
Separator
Water
HR
Hot Exhaust CO_2, H_2O
Recycle Exhaust Gases
Temperature Control
Engine
HR
Hot Engine Coolant
O_2
Air Separation
N_2
Air
HC fuel

FIG. 3

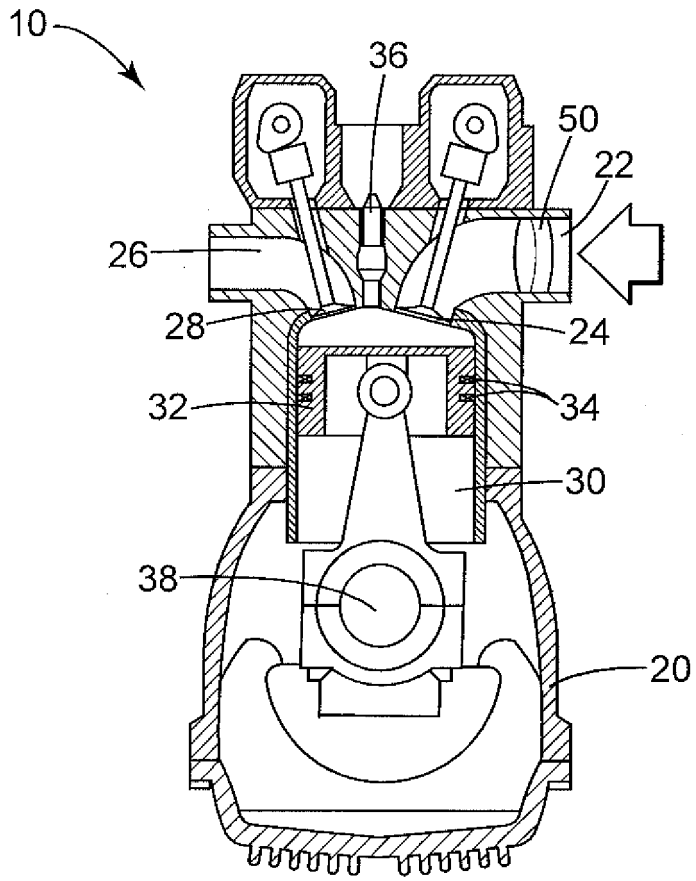

FIG. 4

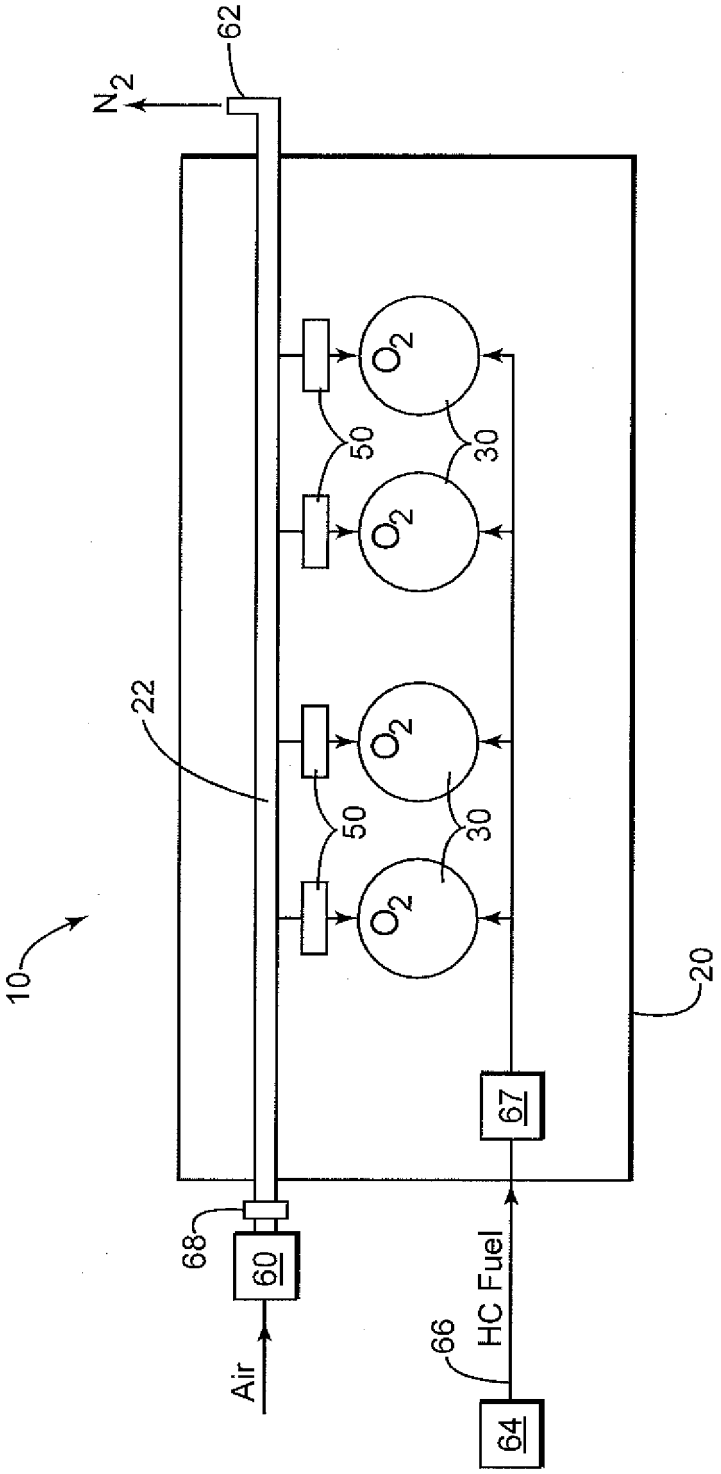

FIG. 5

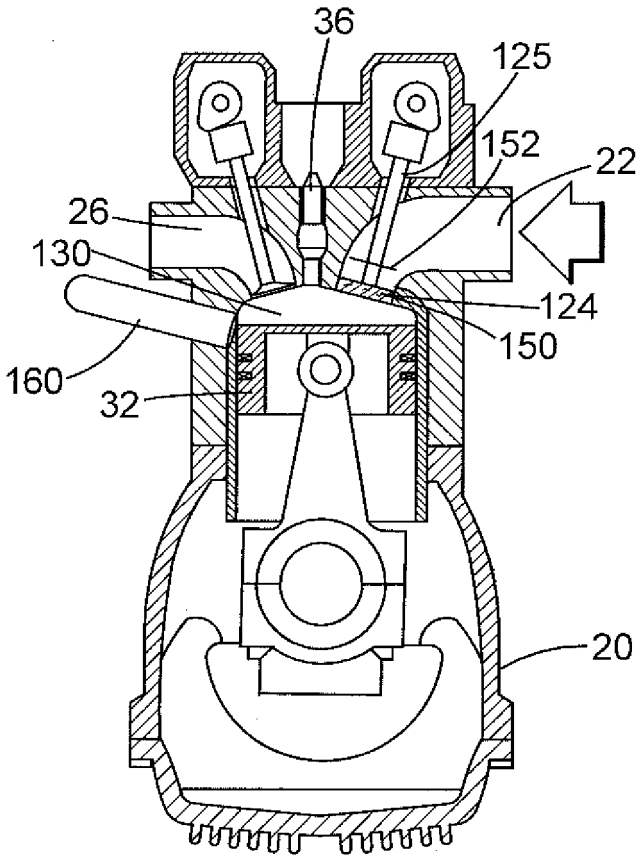

FIG. 6

