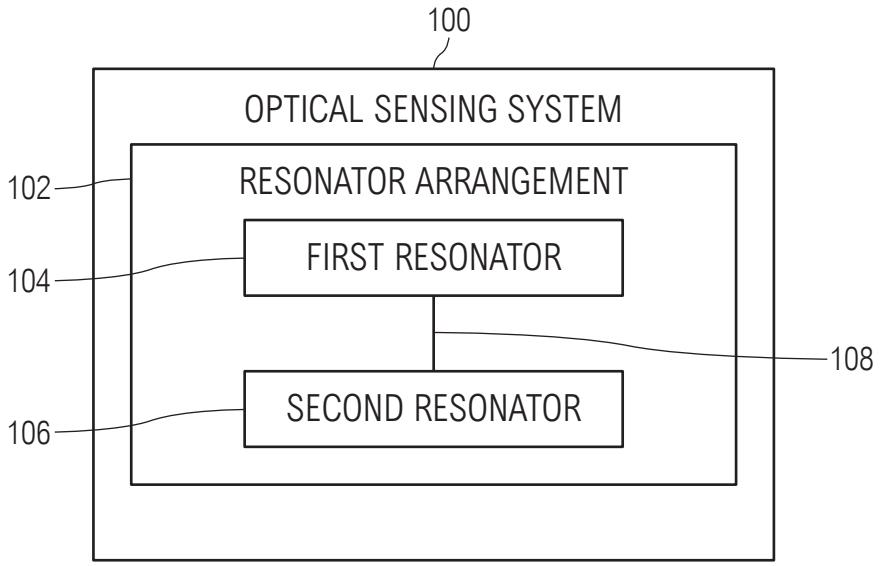
100
OPTICAL SENSING SYSTEM
RESONATOR ARRANGEMENT
102
FIRST RESONATOR
104
108
SECOND RESONATOR
106

FIG. 1A

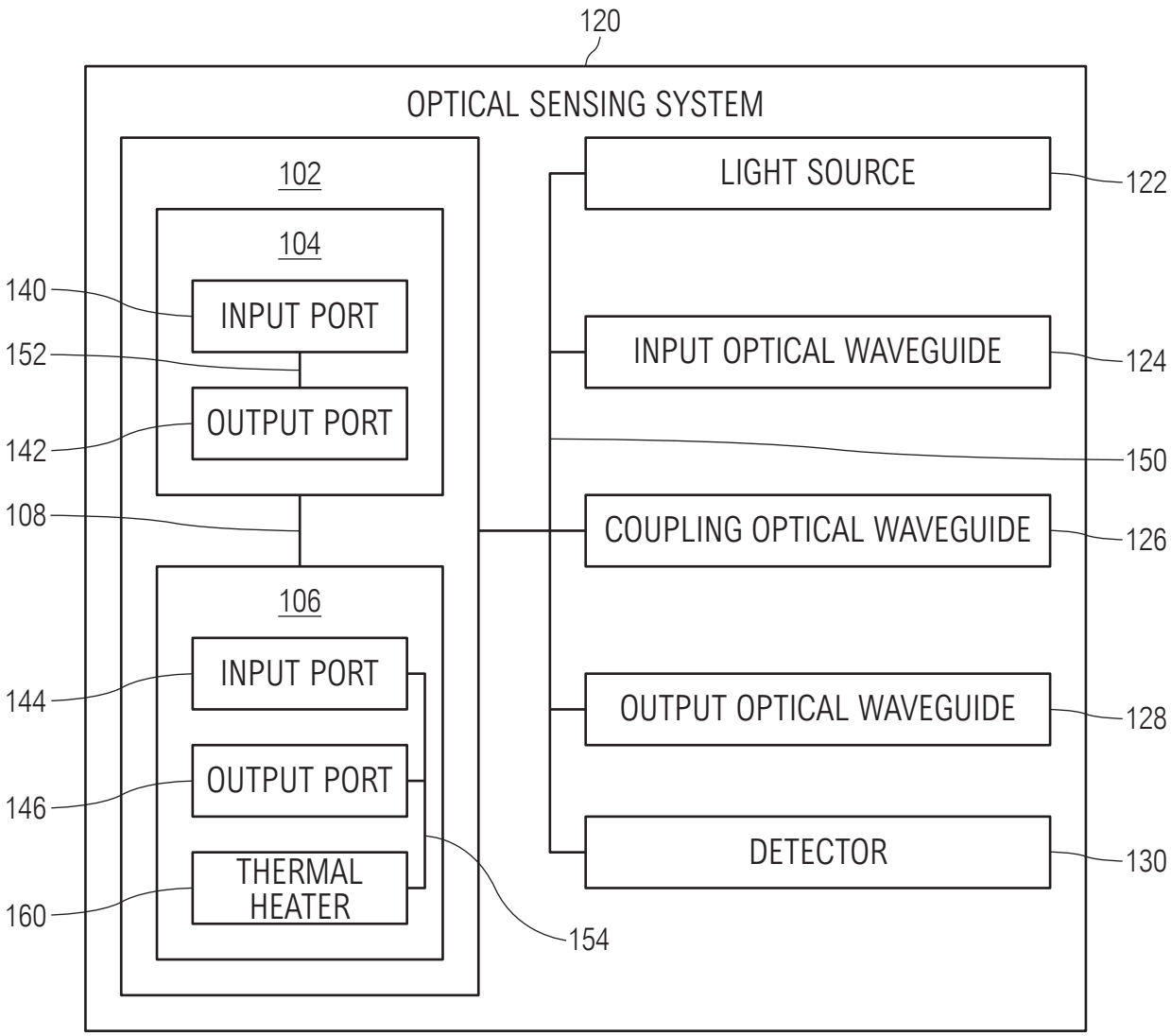
120
OPTICAL SENSING SYSTEM
102
104
140
INPUT PORT
152
OUTPUT PORT
142
108
106
144
INPUT PORT
146
OUTPUT PORT
160
THERMAL HEATER
154
LIGHT SOURCE
122
INPUT OPTICAL WAVEGUIDE
124
150
COUPLING OPTICAL WAVEGUIDE
126
OUTPUT OPTICAL WAVEGUIDE
128
DETECTOR
130

FIG. 1B

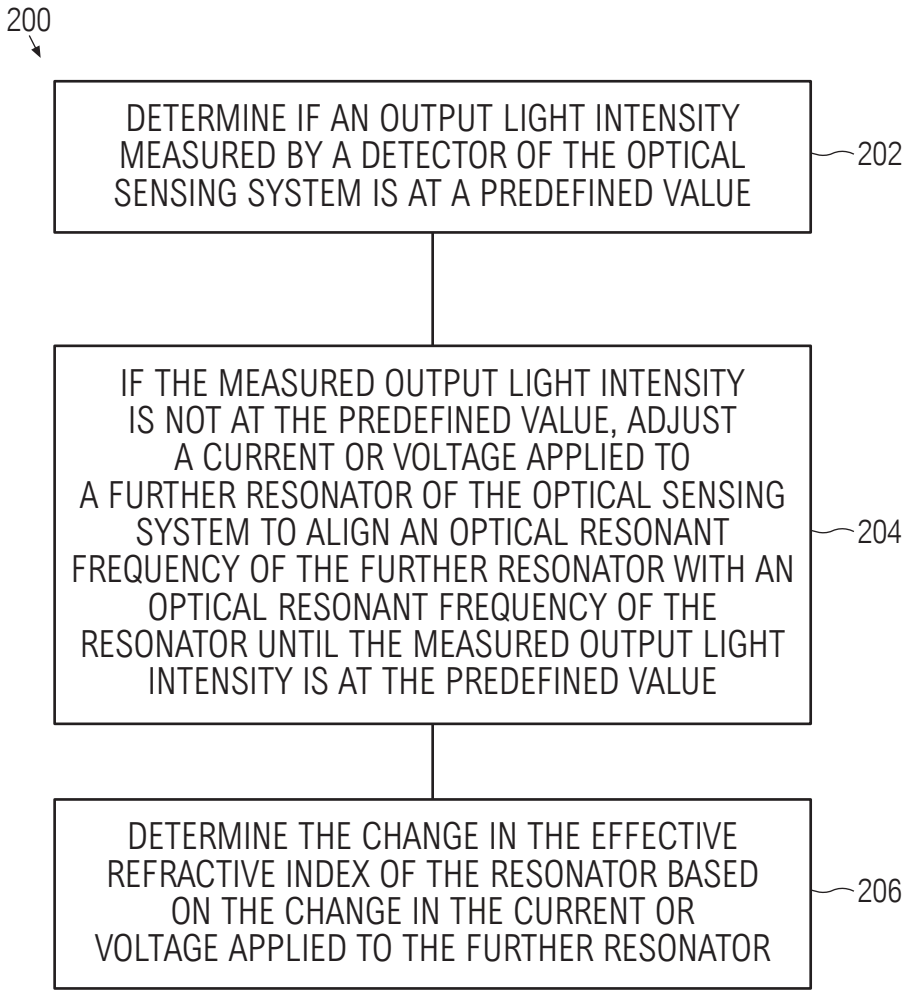
200
DETERMINE IF AN OUTPUT LIGHT INTENSITY MEASURED BY A DETECTOR OF THE OPTICAL SENSING SYSTEM IS AT A PREDEFINED VALUE
202
IF THE MEASURED OUTPUT LIGHT INTENSITY IS NOT AT THE PREDEFINED VALUE, ADJUST A CURRENT OR VOLTAGE APPLIED TO A FURTHER RESONATOR OF THE OPTICAL SENSING SYSTEM TO ALIGN AN OPTICAL RESONANT FREQUENCY OF THE FURTHER RESONATOR WITH AN OPTICAL RESONANT FREQUENCY OF THE RESONATOR UNTIL THE MEASURED OUTPUT LIGHT INTENSITY IS AT THE PREDEFINED VALUE
204
DETERMINE THE CHANGE IN THE EFFECTIVE REFRACTIVE INDEX OF THE RESONATOR BASED ON THE CHANGE IN THE CURRENT OR VOLTAGE APPLIED TO THE FURTHER RESONATOR
206

*FIG. 2*

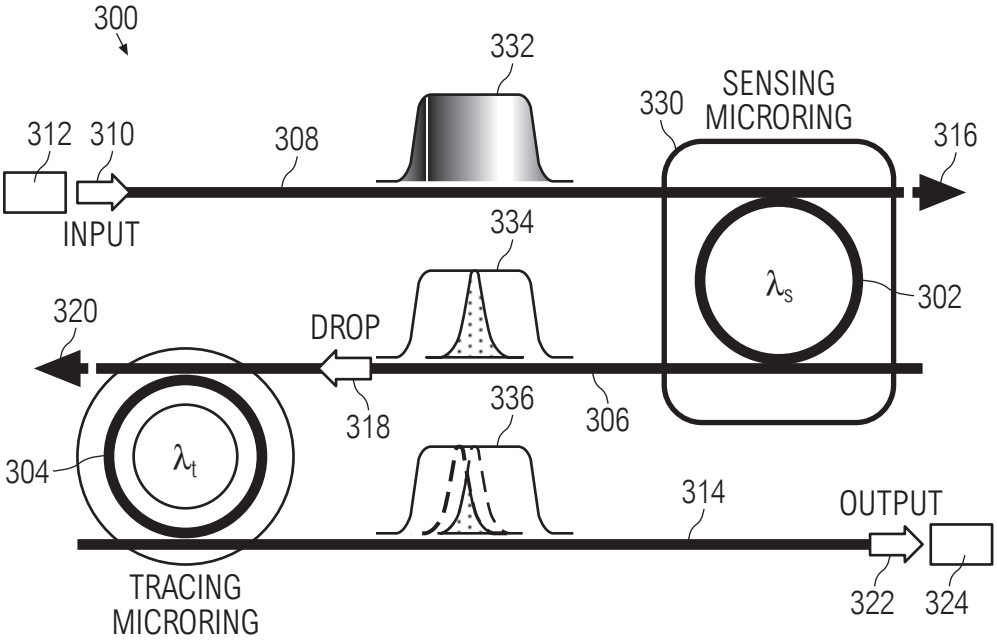
300
332
330
SENSING
MICRORING
312
310
308
316
INPUT
334
$\lambda_s$
302
320
DROP
318
306
336
304
$\lambda_t$
314
OUTPUT
TRACING
MICRORING
322
324

FIG. 3A

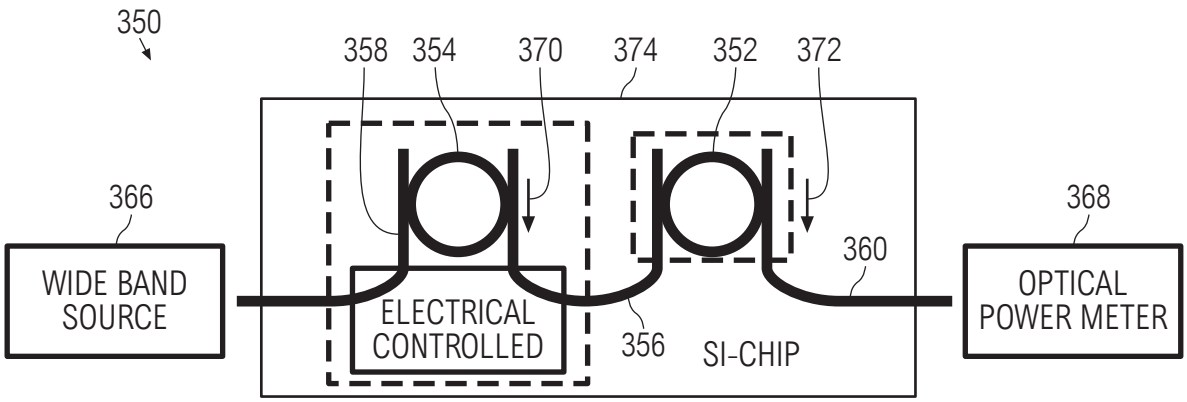
350
358
354
370
374
352
372
366
368
360
WIDE BAND
SOURCE
ELECTRICAL
CONTROLLED
356
SI-CHIP
OPTICAL
POWER METER

FIG. 3B

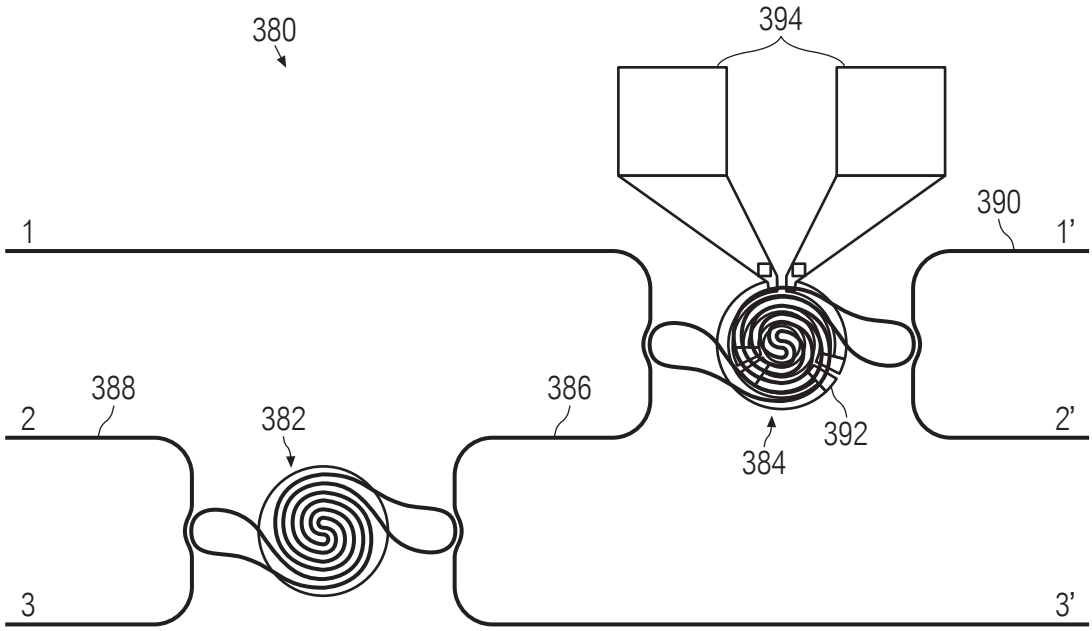


FIG. 3C

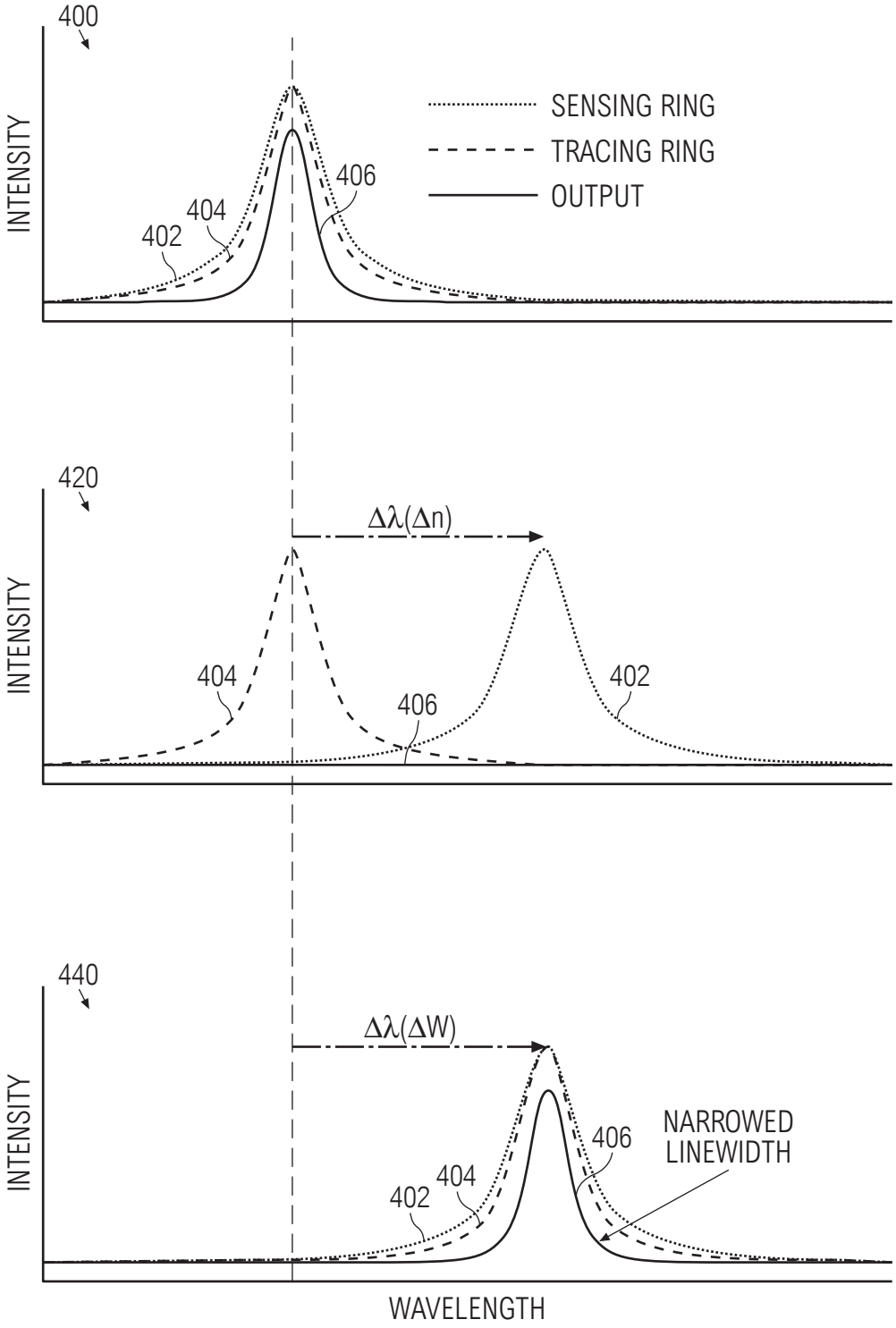
400
INTENSITY
SENSING RING
TRACING RING
OUTPUT
402
404
406
420
INTENSITY
Δλ(Δn)
404
406
402
440
INTENSITY
Δλ(ΔW)
406
NARROWED
LINEWIDTH
404
402
WAVELENGTH

FIG. 4

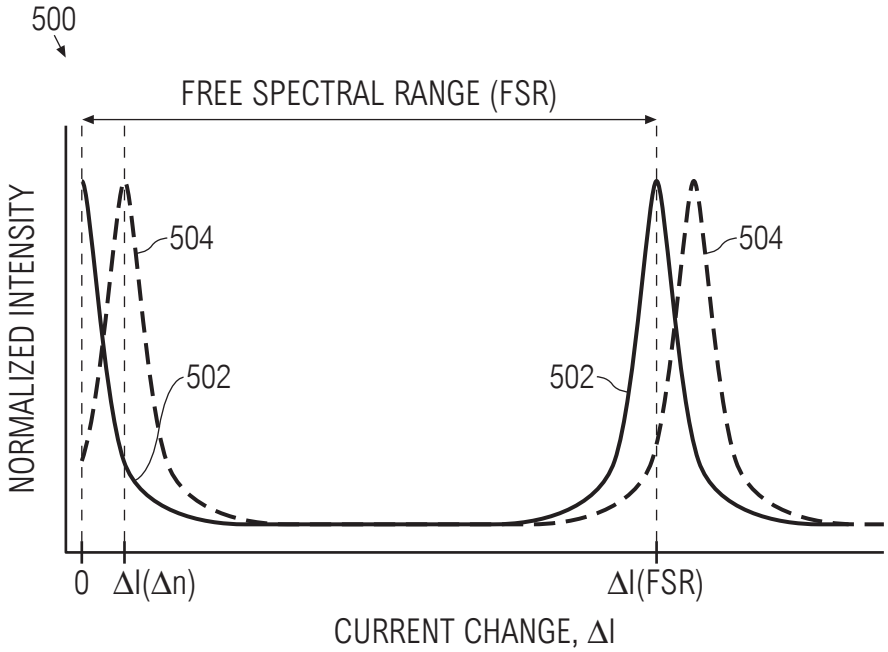
500
FREE SPECTRAL RANGE (FSR)
NORMALIZED INTENSITY
504
502
502
504
0
ΔI(Δn)
ΔI(FSR)
CURRENT CHANGE, ΔI

FIG. 5

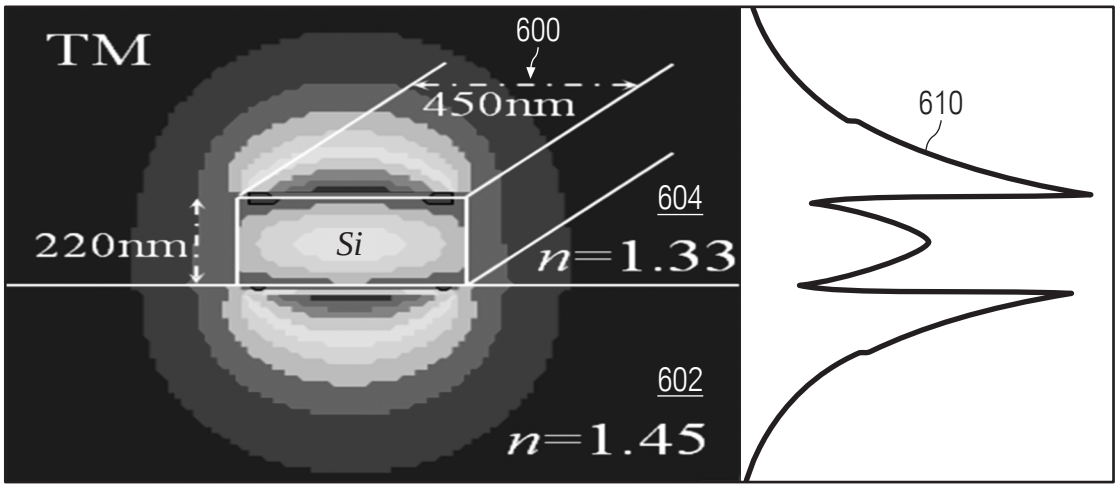
TM
600
450nm
610
604
220nm
Si
n=1.33
602
n=1.45

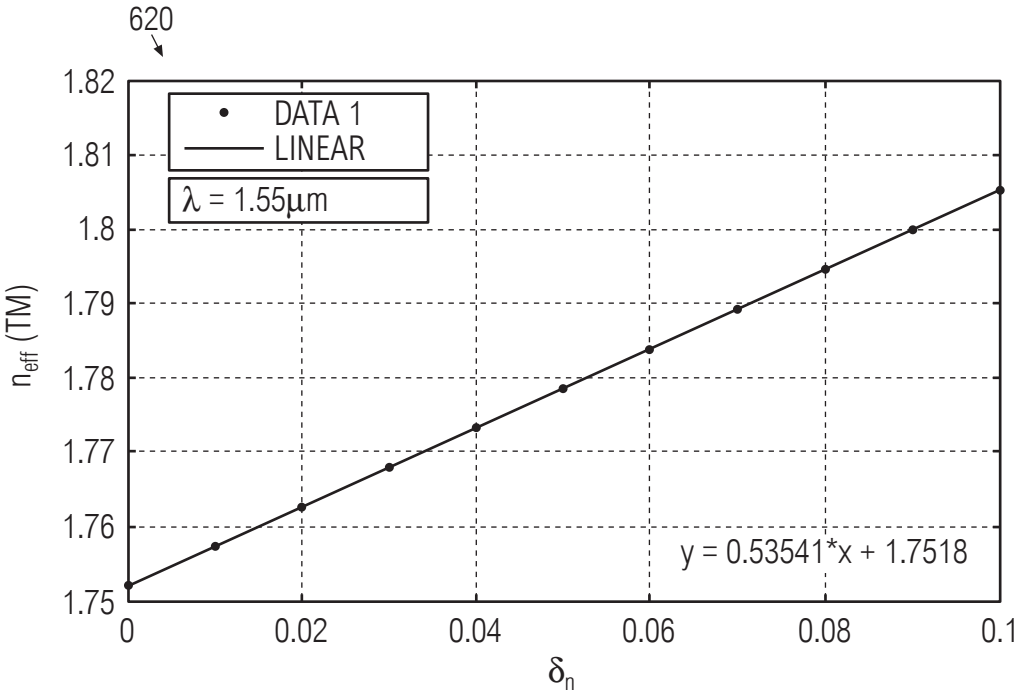
620
DATA 1
LINEAR
λ = 1.55μm
y = 0.53541*x + 1.7518
n_eff (TM)
δ_n
1.82
1.81
1.8
1.79
1.78
1.77
1.76
1.75
0
0.02
0.04
0.06
0.08
0.1

FIG. 6

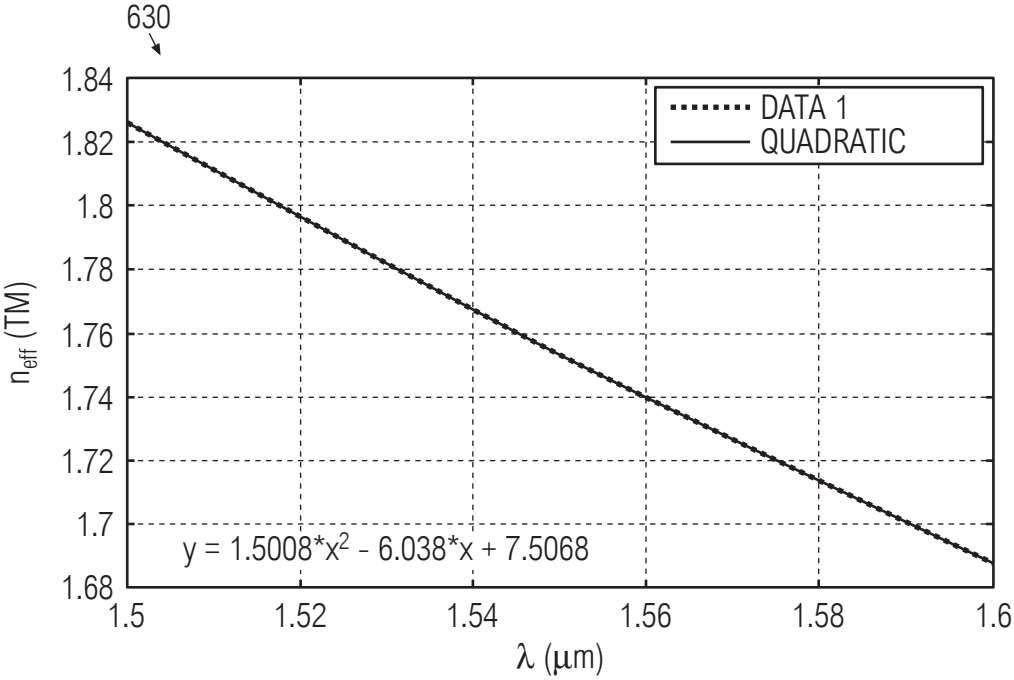
630
1.84
1.82
1.8
1.78
1.76
1.74
1.72
1.7
1.68
$n_{eff}$ (TM)
DATA 1
QUADRATIC
y = 1.5008*x$^2$ - 6.038*x + 7.5068
1.5
1.52
1.54
1.56
1.58
1.6
λ (μm)

*FIG. 6*

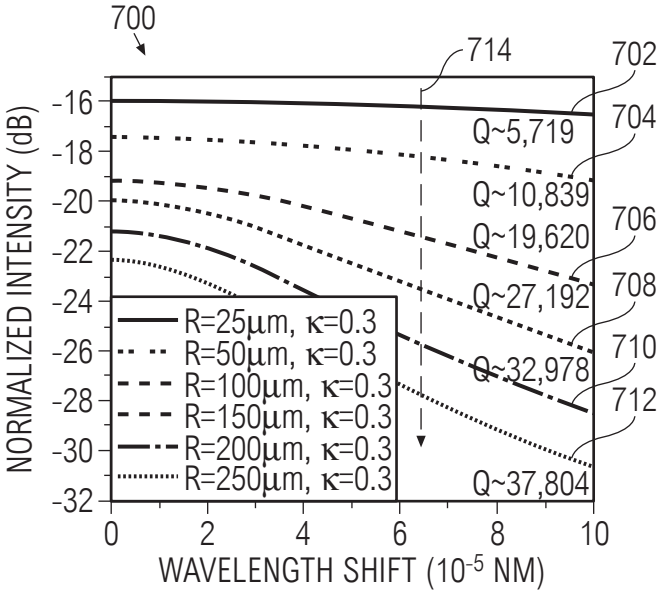
700
714
702
704
706
708
710
712
Q~5,719
Q~10,839
Q~19,620
Q~27,192
Q~32,978
Q~37,804
R=25μm, κ=0.3
R=50μm, κ=0.3
R=100μm, κ=0.3
R=150μm, κ=0.3
R=200μm, κ=0.3
R=250μm, κ=0.3
NORMALIZED INTENSITY (dB)
-16
-18
-20
-22
-24
-26
-28
-30
-32
0
2
4
6
8
10
WAVELENGTH SHIFT (10-5 NM)

FIG. 7A

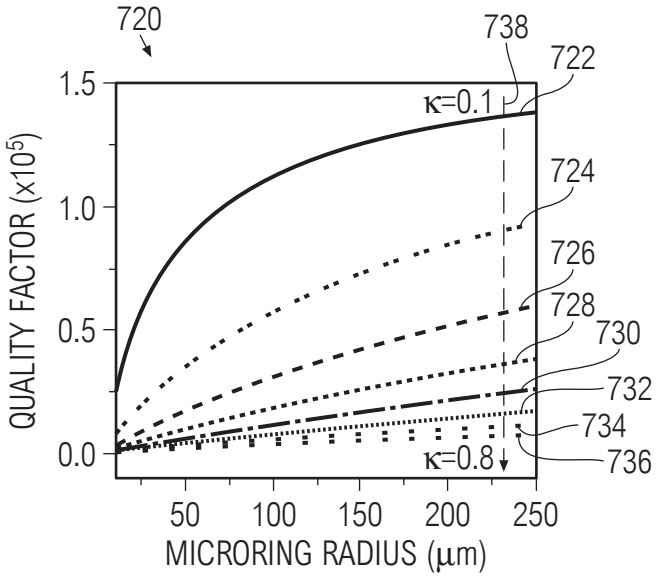
720
738
722
724
726
728
730
732
734
736
κ=0.1
κ=0.8
QUALITY FACTOR (x105)
1.5
1.0
0.5
0.0
50
100
150
200
250
MICRORING RADIUS (μm)

FIG. 7B

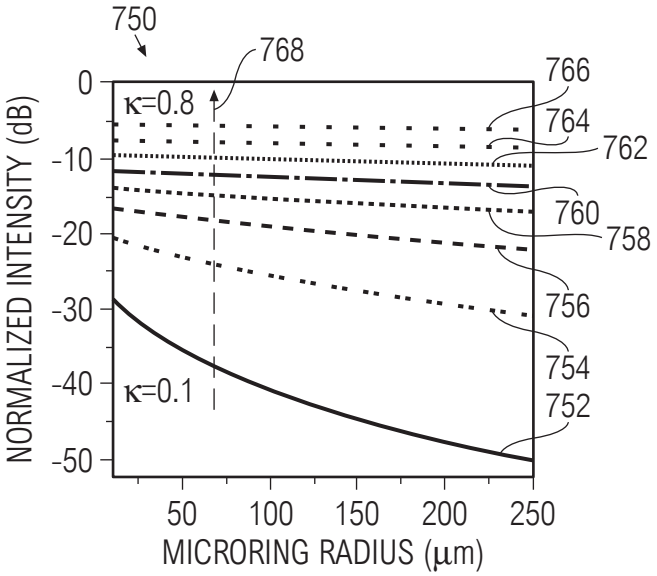
750
768
766
764
762
760
758
756
754
752
κ=0.8
κ=0.1
0
-10
-20
-30
-40
-50
NORMALIZED INTENSITY (dB)
50
100
150
200
250
MICRORING RADIUS (μm)

FIG. 7C