[FIG. 1]

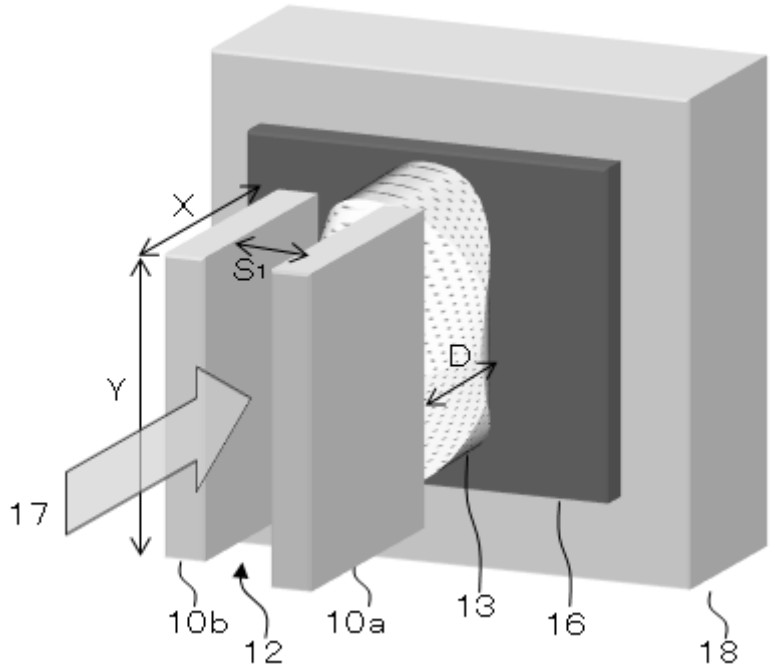

[FIG. 2-1]

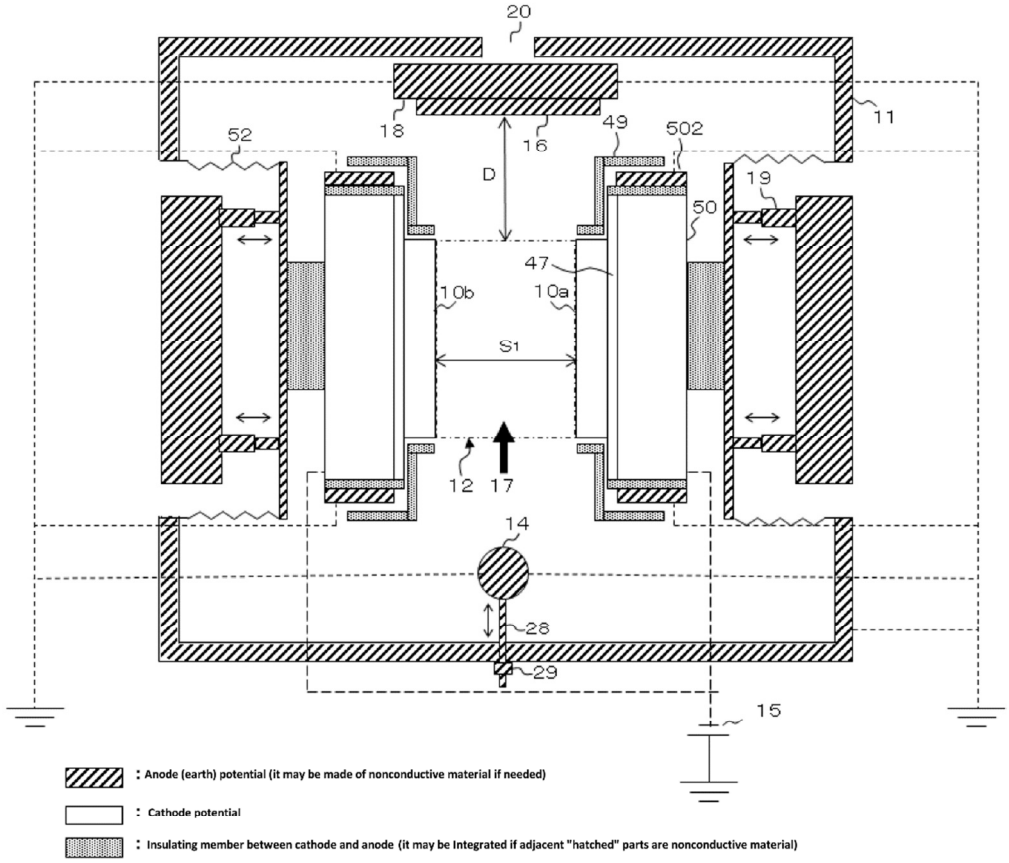
20
18
16
49
502
11
52
D
19
50
47
10b
10a
S1
12
17
14
28
29
15
: Anode (earth) potential (it may be made of nonconductive material if needed)
: Cathode potential
: Insulating member between cathode and anode (it may be Integrated if adjacent "hatched" parts are nonconductive material)

[FIG. 2-2]

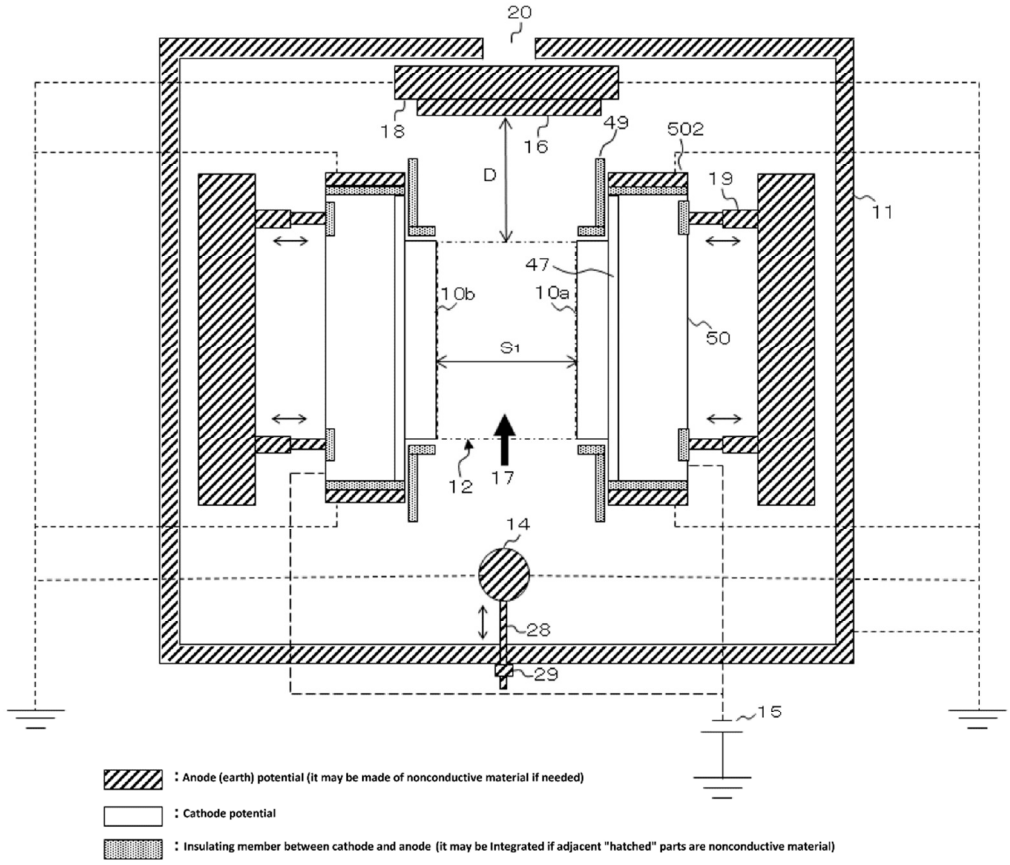
20
18
16
49
502
D
19
11
47
10b
10a
50
S1
12
17
14
28
29
15
: Anode (earth) potential (it may be made of nonconductive material if needed)
: Cathode potential
: Insulating member between cathode and anode (it may be Integrated if adjacent "hatched" parts are nonconductive material)

[FIG. 2-3]

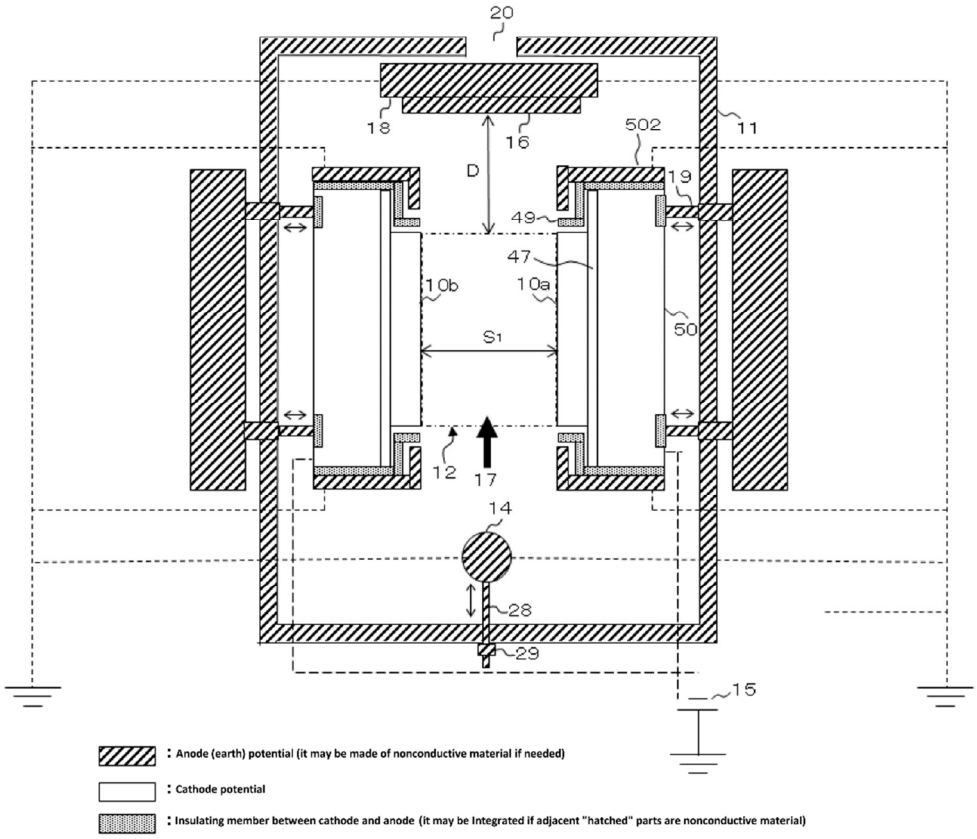
20
18
16
502
11
D
19
49
47
10b
10a
50
S1
12
17
14
28
29
15
: Anode (earth) potential (it may be made of nonconductive material if needed)
: Cathode potential
: Insulating member between cathode and anode (it may be Integrated if adjacent "hatched" parts are nonconductive material)

[FIG. 3]

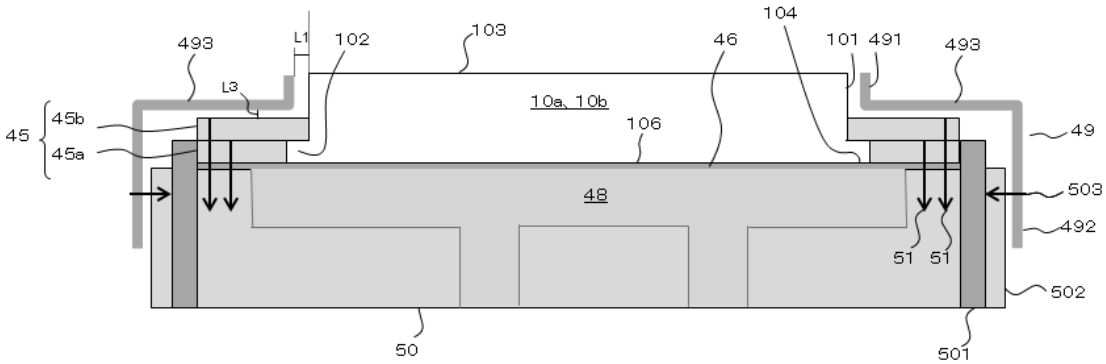
493
L1
102
103
104
46
101
491
493
L3
10a, 10b
106
45
45b
45a
49
48
503
492
51
51
502
50
501

[FIG. 4]

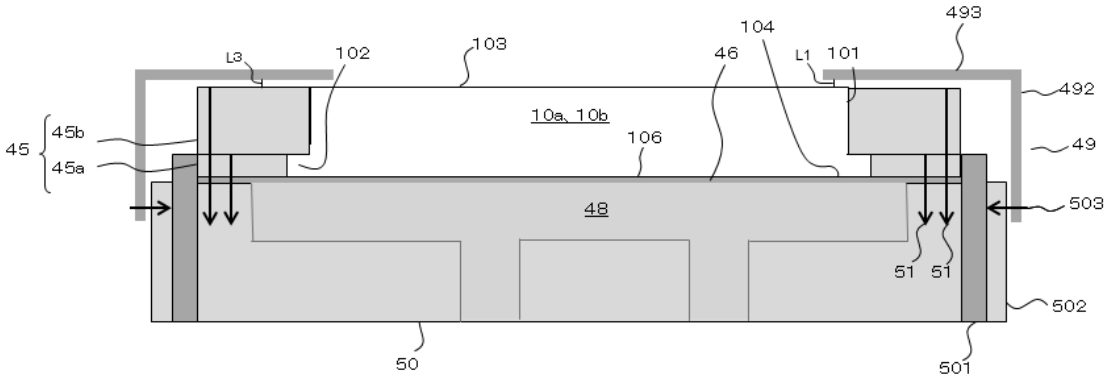
493
104
L3
102
103
46
L1
101
492
10a, 10b
45
45b
45a
106
49
48
503
51
51
502
50
501

[FIG. 5]

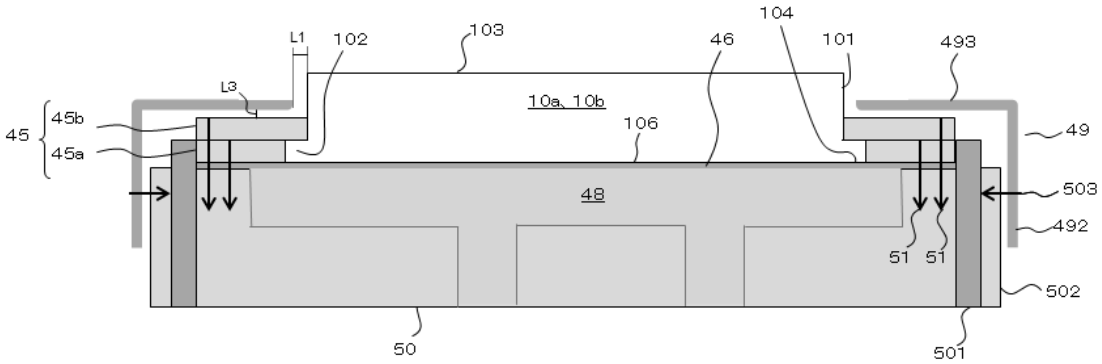
L1
102
103
104
46
101
493
L3
10a, 10b
106
45
45b
45a
49
48
503
492
51
51
502
50
501

[FIG. 6]

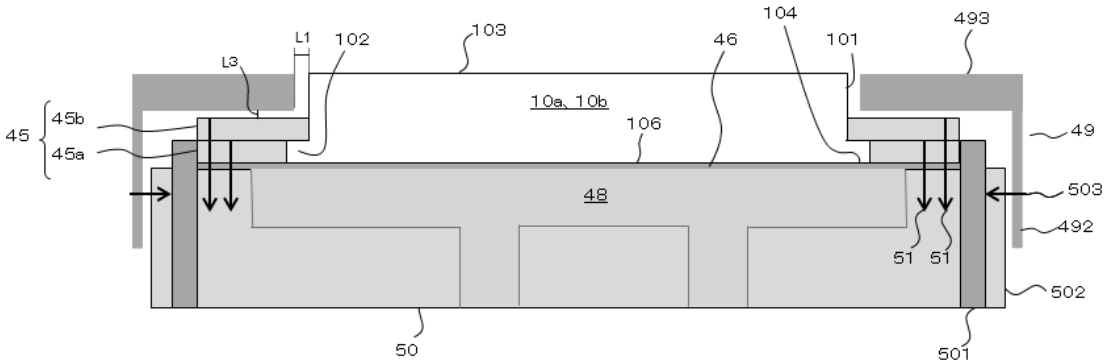
L1
102
103
104
493
L3
46
101
10a, 10b
106
45
45b
45a
49
48
503
492
51
51
502
50
501

[FIG. 7]

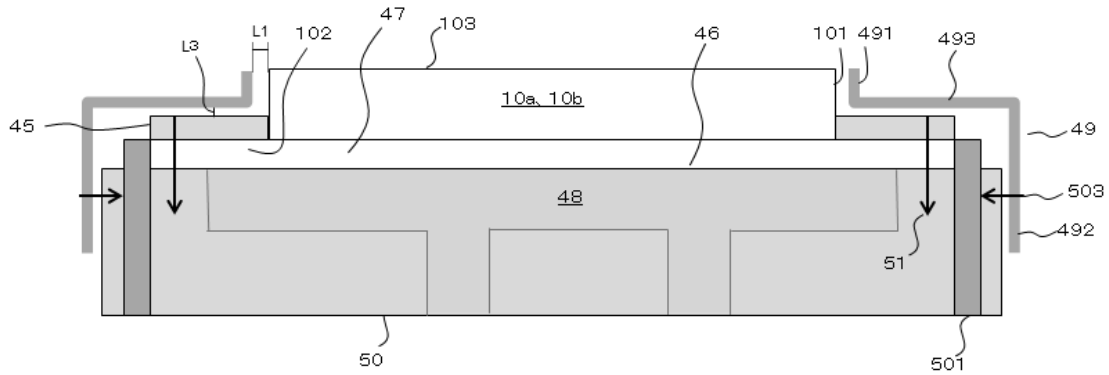

[FIG. 8]

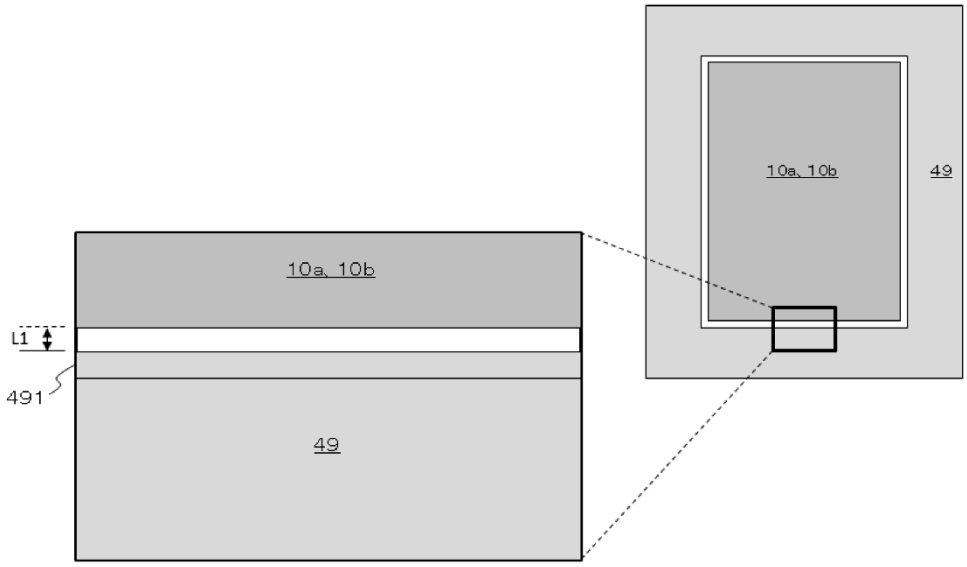

Enlarged View

[FIG. 9]

