(12) INTERNATIONAL APPLICATION PUBLISHED UNDER THE PATENT COOPERATION TREATY (PCT)

(19) World Intellectual Property Organization
International Bureau

(43) International Publication Date
17 May 2001 (17.05.2001)

PCT

(10) International Publication Number
WO 01/35440 A1

(51) International Patent Classification[7]: H01J 37/04, 9/18

(21) International Application Number: PCT/US00/23500

(22) International Filing Date: 25 August 2000 (25.08.2000)

(25) Filing Language: English

(26) Publication Language: English

(30) Priority Data:
09/437,808 10 November 1999 (10.11.1999) US

(71) Applicant: ETEC SYSTEMS, INC. [US/US]; 26460 Corporate Avenue, Hayward, CA 94545 (US).

(72) Inventors: SPALLAS, James, P.; 8248 H Northlake Drive, Dublin, CA 94568 (US). MURAY, Lawrence, P.; 62 Buckingham Drive, Moraga, CA 94556 (US).

(74) Agents: BERNADICOU, Michael, A. et al.; Blakely, Sokoloff, Taylor & Zafman LLP, 7th floor, 12400 Wilshire Boulevard, Los Angeles, CA 90025 (US).

(81) Designated States *(national)*: AE, AG, AL, AM, AT, AT (utility model), AU, AZ, BA, BB, BG, BR, BY, BZ, CA, CH, CN, CR, CU, CZ, DE, DK, DM, DZ, EE, ES, FI, GB, GD, GE, GH, GM, HR, HU, ID, IL, IN, IS, JP, KE, KG, KP, KR, KZ, LC, LK, LR, LS, LT, LU, LV, MA, MD, MG, MK, MN, MW, MX, MZ, NO, NZ, PL, PT, RO, RU, SD, SE, SG, SI, SK, SL, TJ, TM, TR, TT, TZ, UA, UG, UZ, VN, YU, ZA, ZW.

(84) Designated States *(regional)*: European patent (AT, BE, CH, CY, DE, DK, ES, FI, FR, GB, GR, IE, IT, LU, MC, NL, PT, SE).

Published:
— *With international search report.*

For two-letter codes and other abbreviations, refer to the "Guidance Notes on Codes and Abbreviations" appearing at the beginning of each regular issue of the PCT Gazette.

(54) Title: METHOD AND APPARATUS FOR ELECTRON BEAM COLUMN ASSEMBLY WITH PRECISE ALIGNMENT USING DISPLACED SEMI-TRANSPARENT MEMBRANES

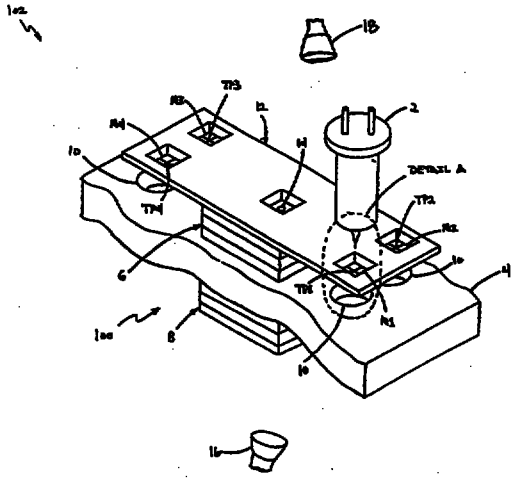

(57) Abstract: For electron beam columns, an off-axis alignment assembly for aligning an electron beam emitter tip to an aperture and a method of aligning the two. One embodiment of the alignment assembly is made of an electrically conductive material, such as doped silicon, which is formed integrally with an electron beam microcolumn assembly. The alignment assembly has several areas etched down to thin membranes ranging in thickness from about 2 μm to 10 μm. A target (e.g., a hole or raised area) is formed in each membrane and an aperture is formed during the same operation to maintain precise distances between each of the targeting positions and between each targeting position and aperture. Each membrane is transparent to a light illuminating one, or both, of its surfaces, thus allowing direct alignment of an emitting tip of an electron beam emitter with the target. Once this positioning is performed for, e.g., three targets, the precise location of the emitting tip is known relative to the aperture on the alignemt assembly, thus enabling tip alignment to the aperture without directly viewing either the tip or aperture together.

WO 01/35440 A1