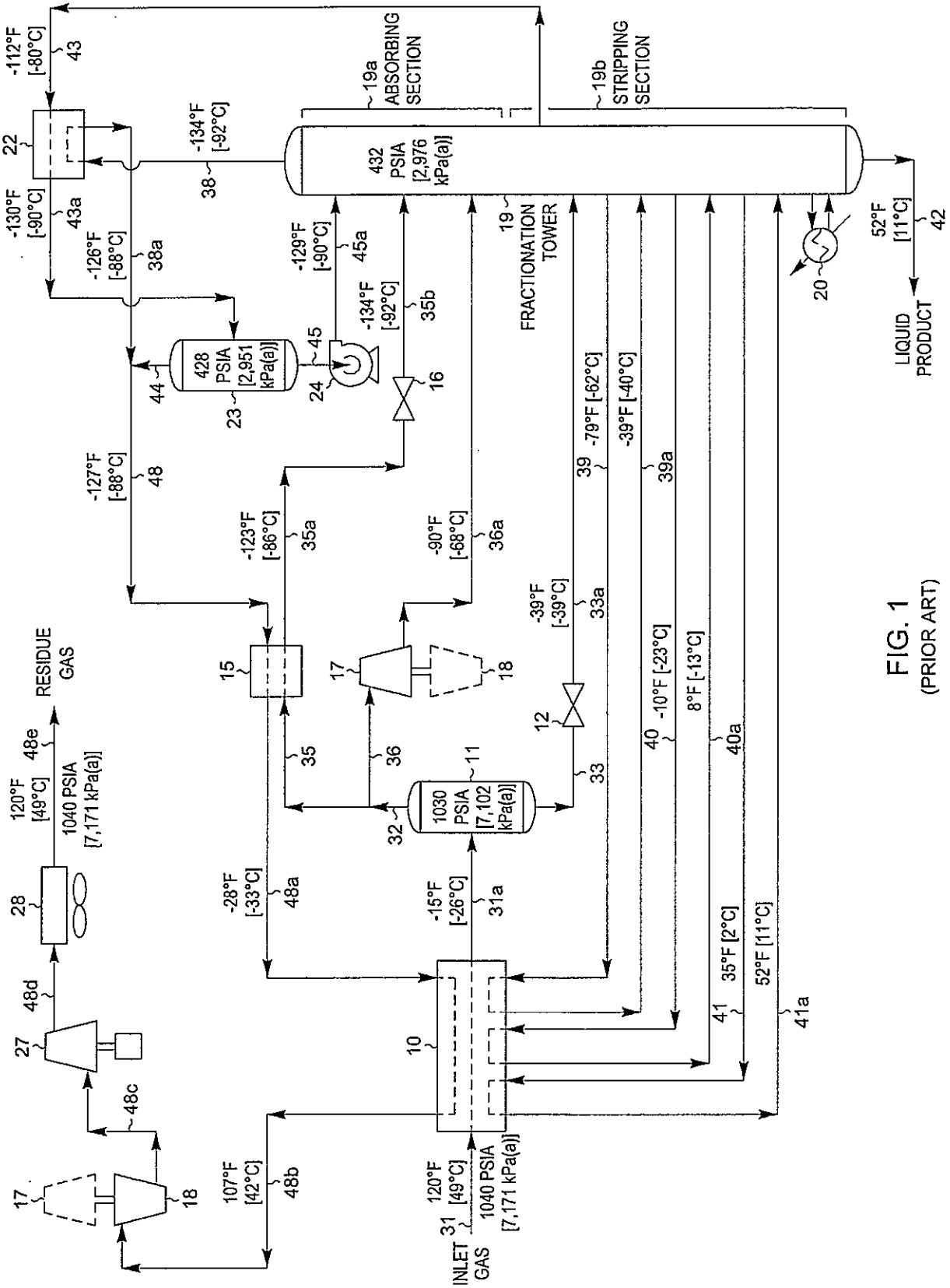

FIG. 1
(PRIOR ART)

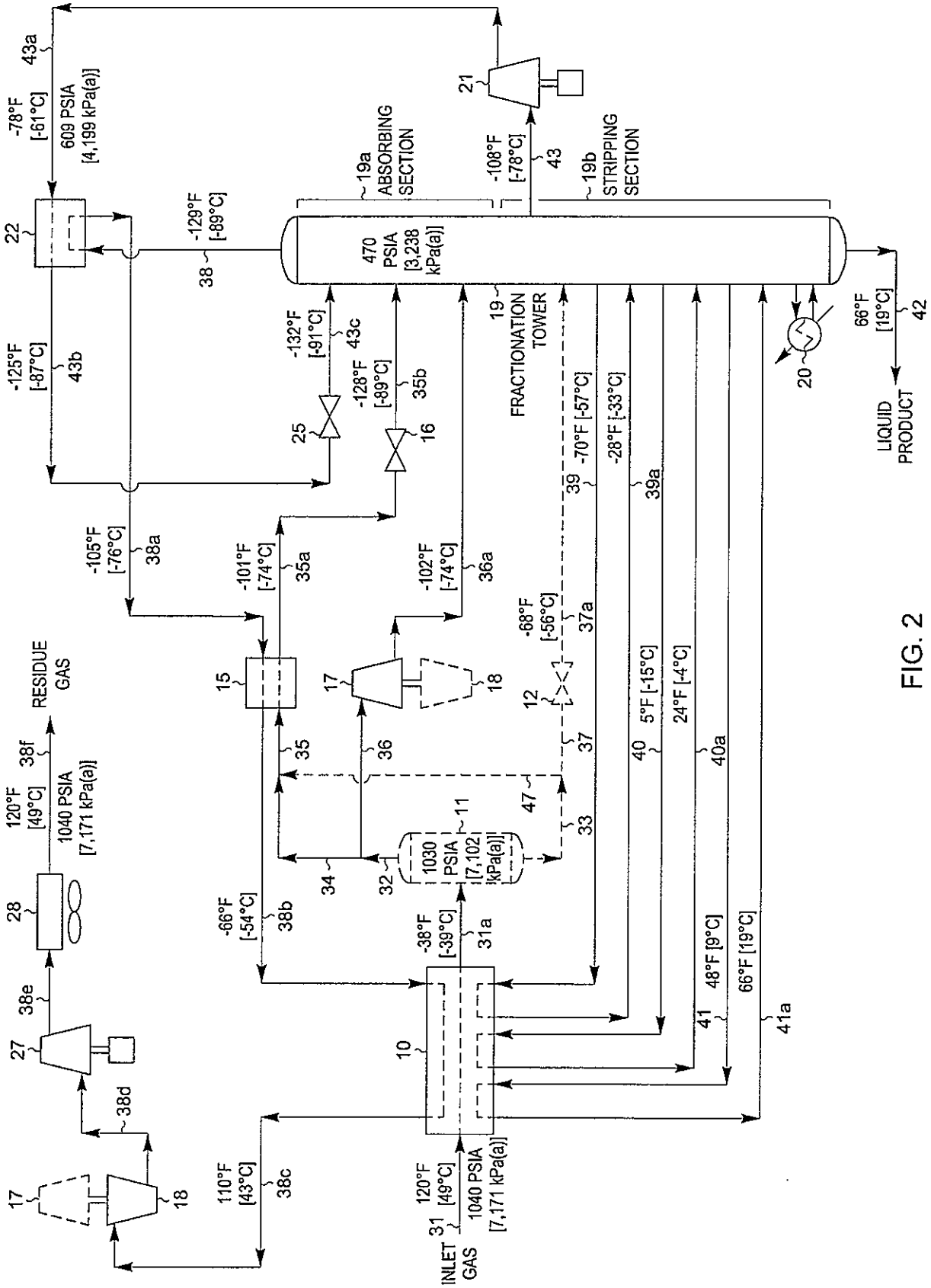
INLET GAS
31
120°F [49°C]
1040 PSIA [7,171 kPa(a)]
110°F [43°C]
38c
38d
38e
38f
RESIDUE GAS
120°F [49°C]
1040 PSIA [7,171 kPa(a)]
-66°F [-54°C]
38b
-105°F [-76°C]
38a
-101°F [-74°C]
35a
-102°F [-74°C]
36a
-68°F [-56°C]
37a
-70°F [-57°C]
39
-28°F [-33°C]
39a
5°F [-15°C]
40
24°F [-4°C]
40a
48°F [9°C]
41
66°F [19°C]
41a
66°F [19°C]
42
LIQUID PRODUCT
-78°F [-61°C]
43a
609 PSIA [4,199 kPa(a)]
-125°F [-87°C]
43b
-132°F [-91°C]
43c
-128°F [-89°C]
35b
-129°F [-89°C]
38
-108°F [-78°C]
43
470 PSIA [3,238 kPa(a)]
19a ABSORBING SECTION
19b STRIPPING SECTION
19 FRACTIONATION TOWER
1030 PSIA [7,102 kPa(a)]
-38°F [-39°C]
31a
10
11
12
15
16
17
18
20
21
22
25
27
28
32
33
34
35
36
37
47

FIG. 2

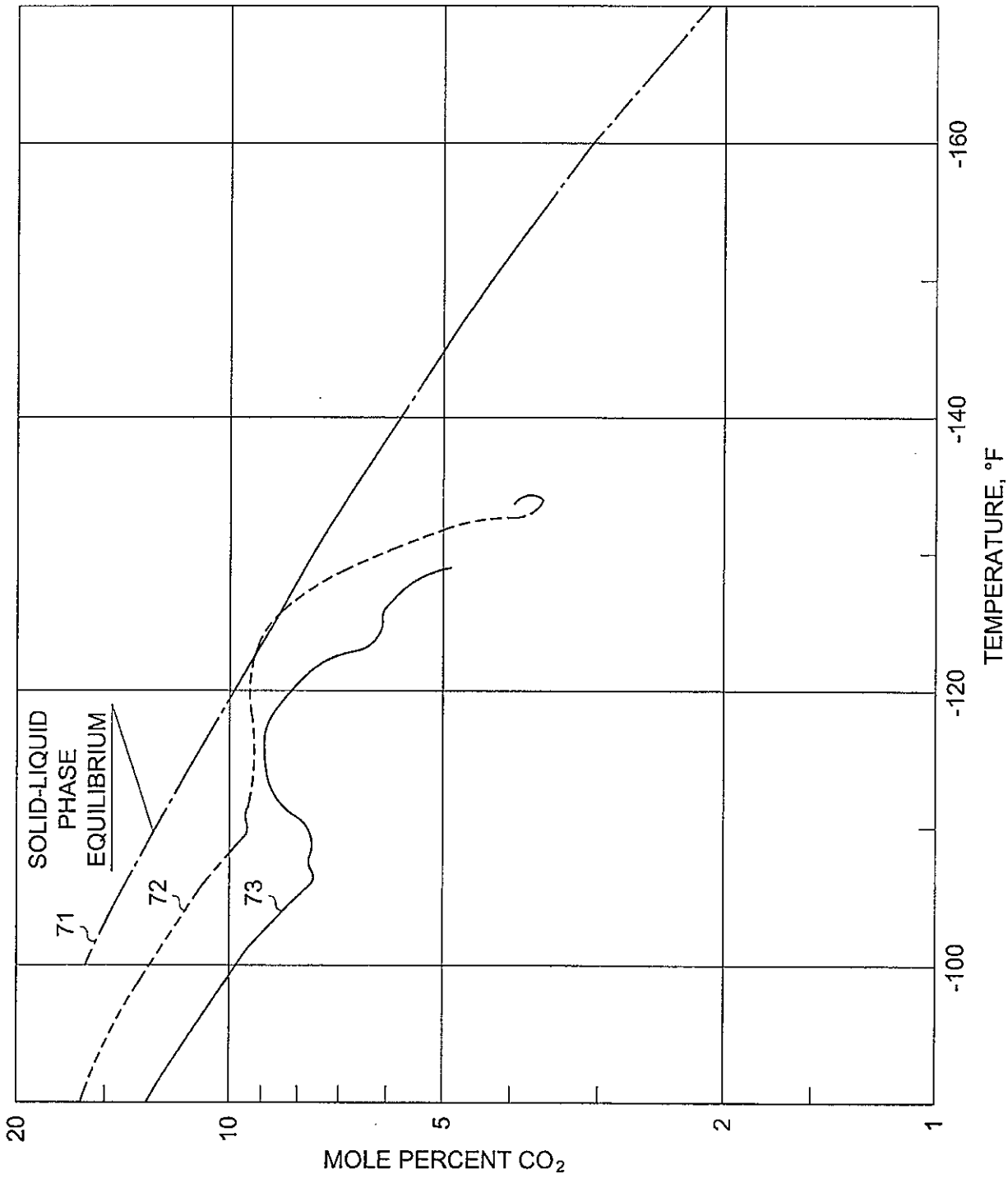
SOLID-LIQUID
PHASE
EQUILIBRIUM
71
72
73
20
10
5
2
1
MOLE PERCENT CO_2
-160
-140
-120
-100
TEMPERATURE, °F

FIG. 3

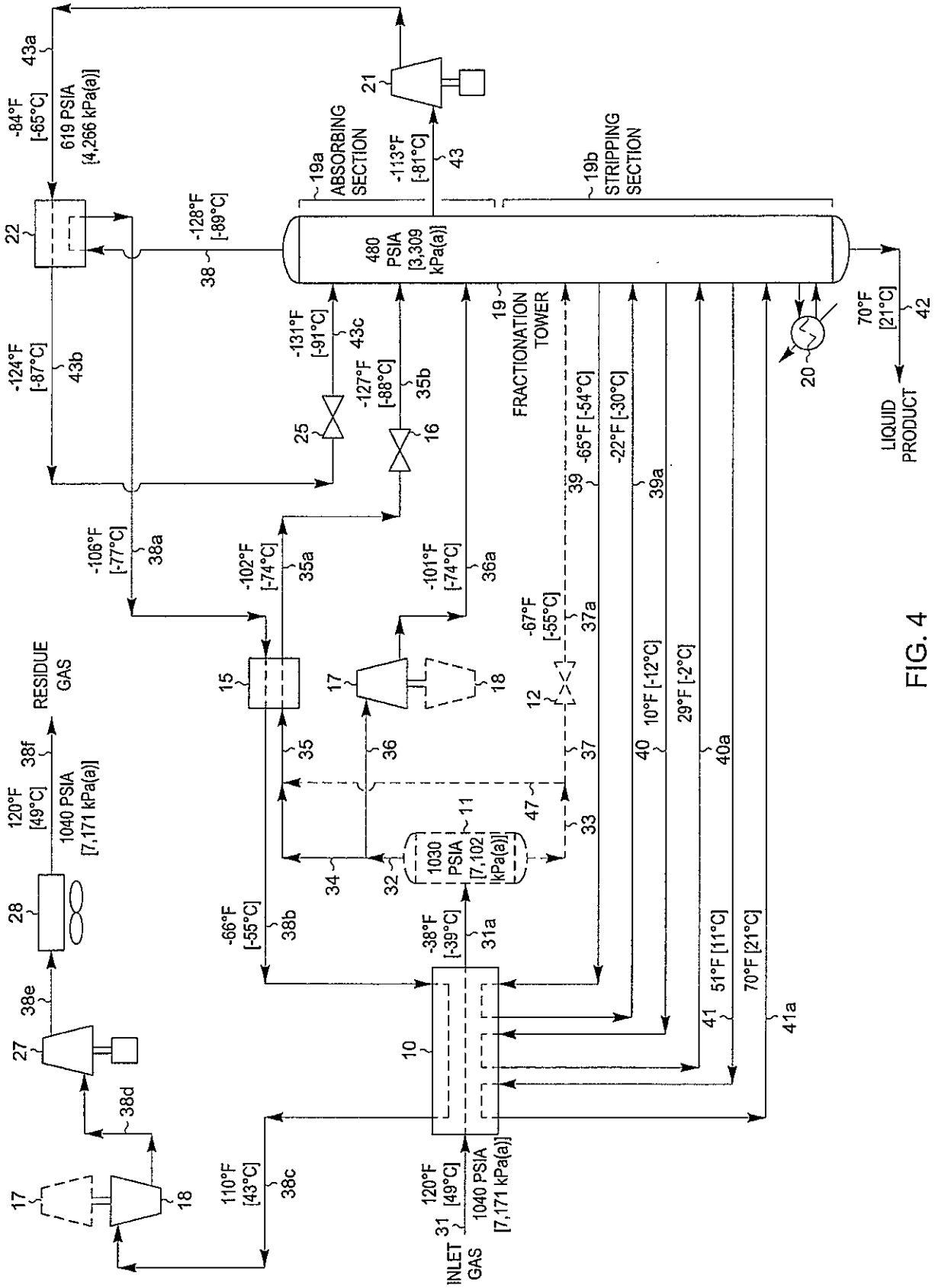
INLET GAS
31
120°F [49°C]
1040 PSIA [7,171 kPa(a)]
RESIDUE GAS
38f
120°F [49°C]
1040 PSIA [7,171 kPa(a)]
LIQUID PRODUCT
42
70°F [21°C]
480 PSIA [3,309 kPa(a)]
619 PSIA [4,266 kPa(a)]
1030 PSIA [7,102 kPa(a)]
19a ABSORBING SECTION
19b STRIPPING SECTION
19 FRACTIONATION TOWER
-84°F [-65°C]
-113°F [-81°C]
-128°F [-89°C]
-124°F [-87°C]
-131°F [-91°C]
-127°F [-88°C]
-106°F [-77°C]
-102°F [-74°C]
-101°F [-74°C]
-67°F [-55°C]
-65°F [-54°C]
-22°F [-30°C]
10°F [-12°C]
29°F [-2°C]
51°F [11°C]
70°F [21°C]
-66°F [-55°C]
-38°F [-39°C]
110°F [43°C]
43a
43
43b
43c
35b
38
38a
35a
36a
39
39a
37a
40
40a
41
41a
38b
31a
38c
38d
38e
35
36
37
33
34
32
47
12
10
11
15
16
17
18
20
21
22
25
27
28

FIG. 4

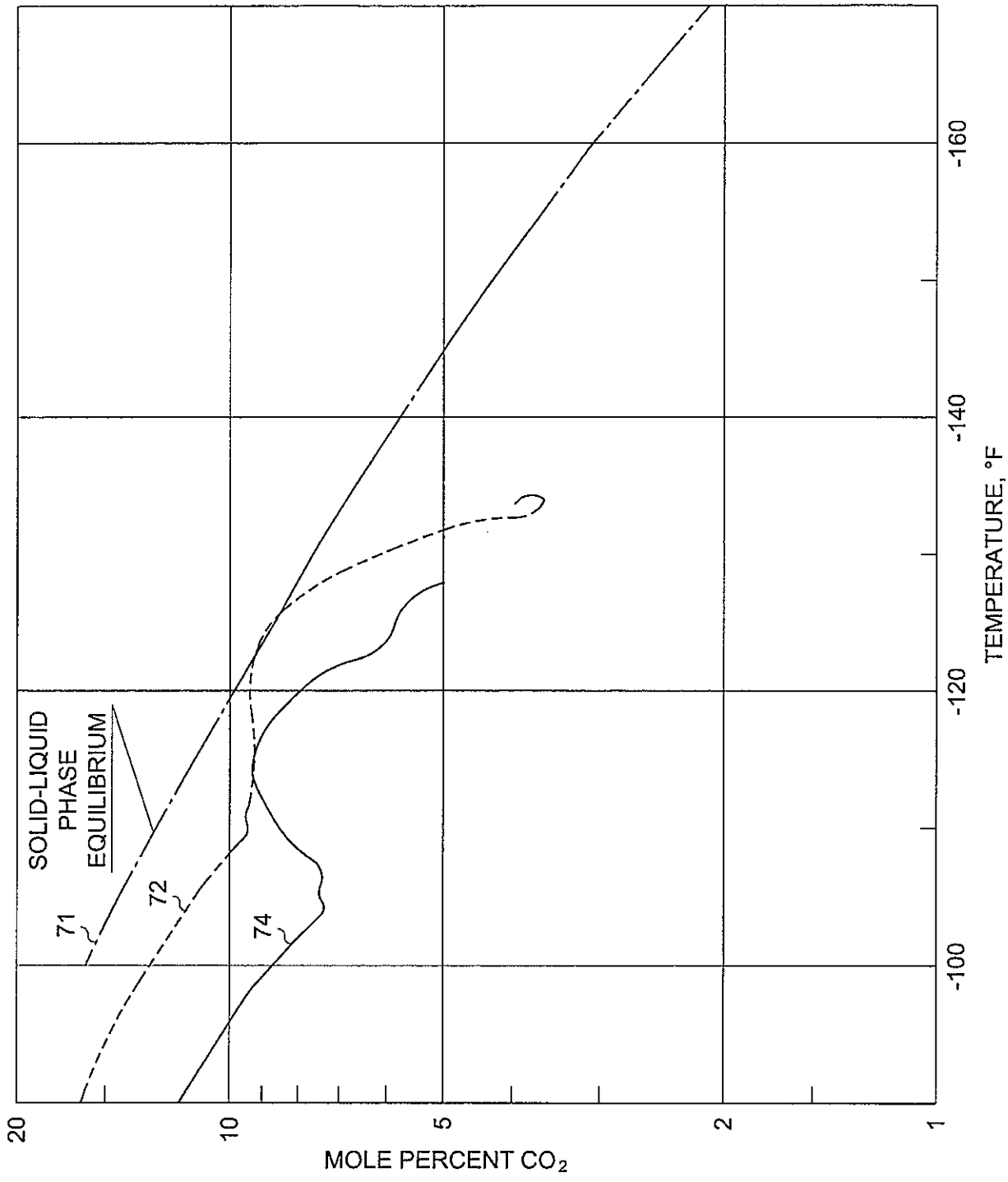
SOLID-LIQUID PHASE EQUILIBRIUM
71
72
74
20
10
5
2
1
MOLE PERCENT CO_2
-160
-140
-120
-100
TEMPERATURE, °F

FIG. 5

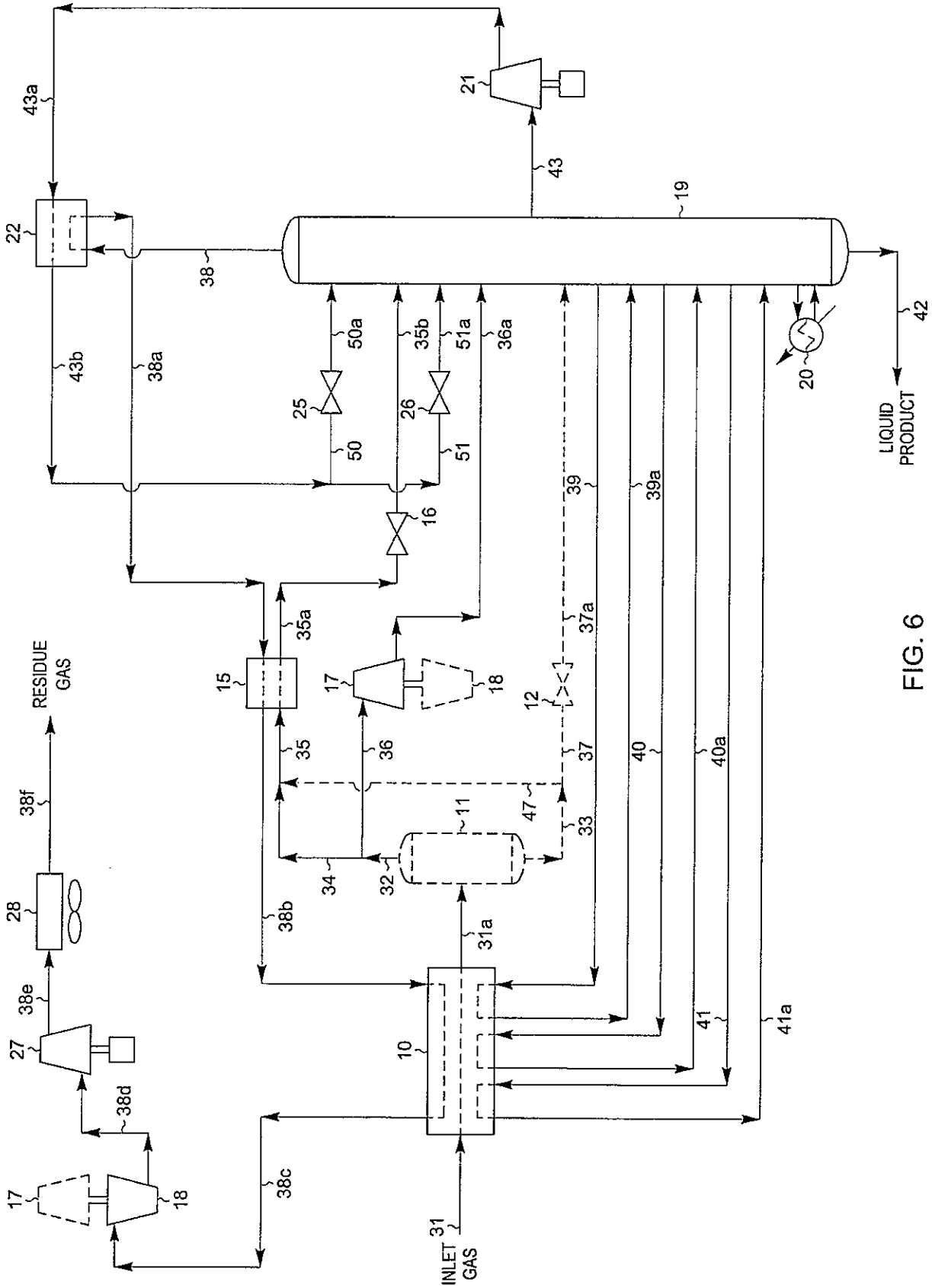
43a
21
43
19
22
38
42
LIQUID PRODUCT
20
43b
38a
50a
35b
51a
36a
25
26
50
51
16
39
39a
35a
37a
15
17
18
12
RESIDUE GAS
35
36
37
40
40a
38f
11
47
33
34
32
28
38b
31a
38e
27
10
41
41a
38d
17
18
38c
31
INLET GAS

FIG. 6

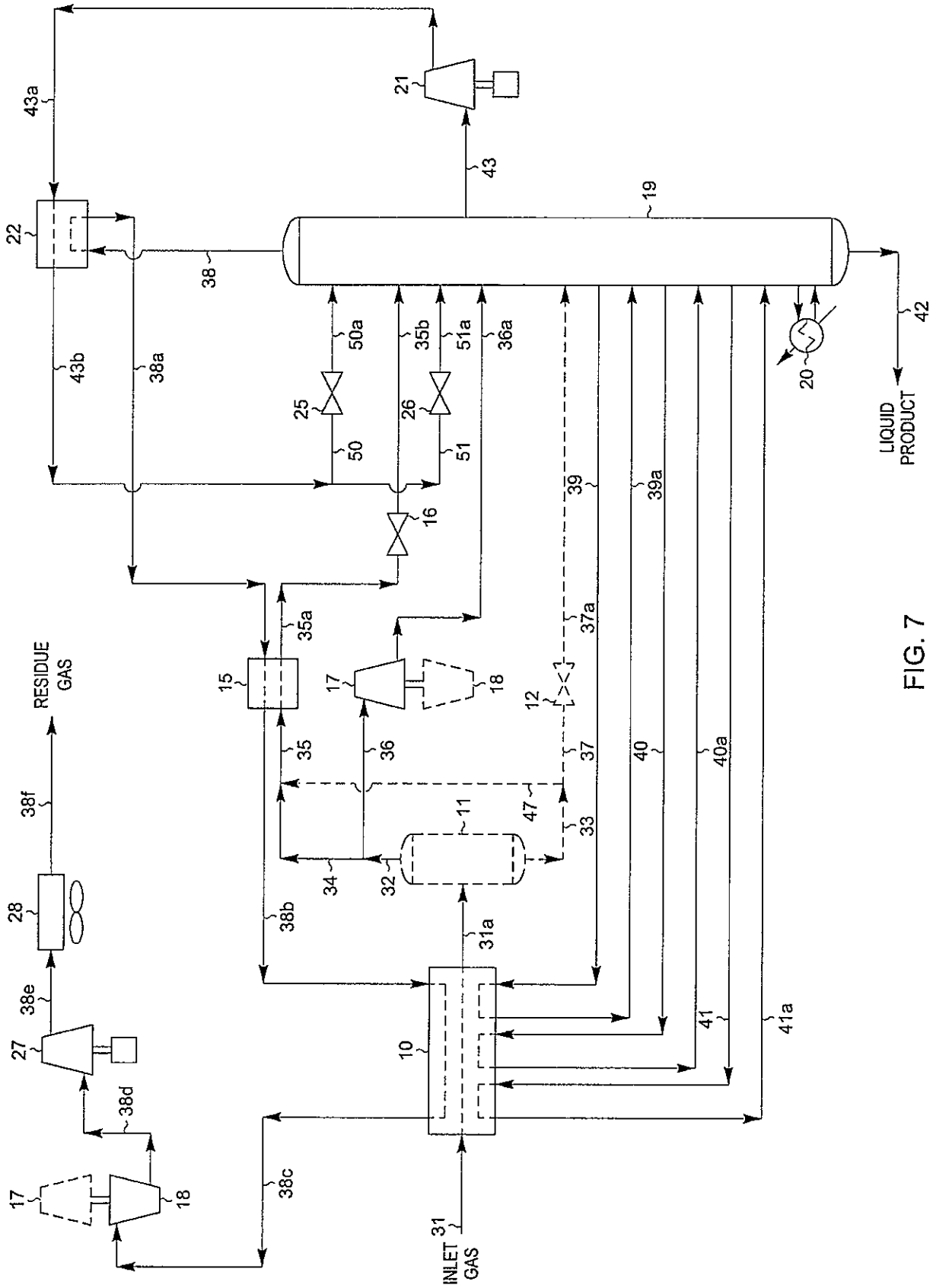
43a
21
43
19
22
38
42
LIQUID PRODUCT
20
43b
38a
50a
35b
51a
36a
25
26
50
51
16
39
39a
35a
37a
15
17
18
12
RESIDUE GAS
35
36
37
40
40a
38f
11
47
33
28
34
32
38b
31a
38e
27
10
41
41a
38d
17
18
38c
31
INLET GAS

FIG. 7

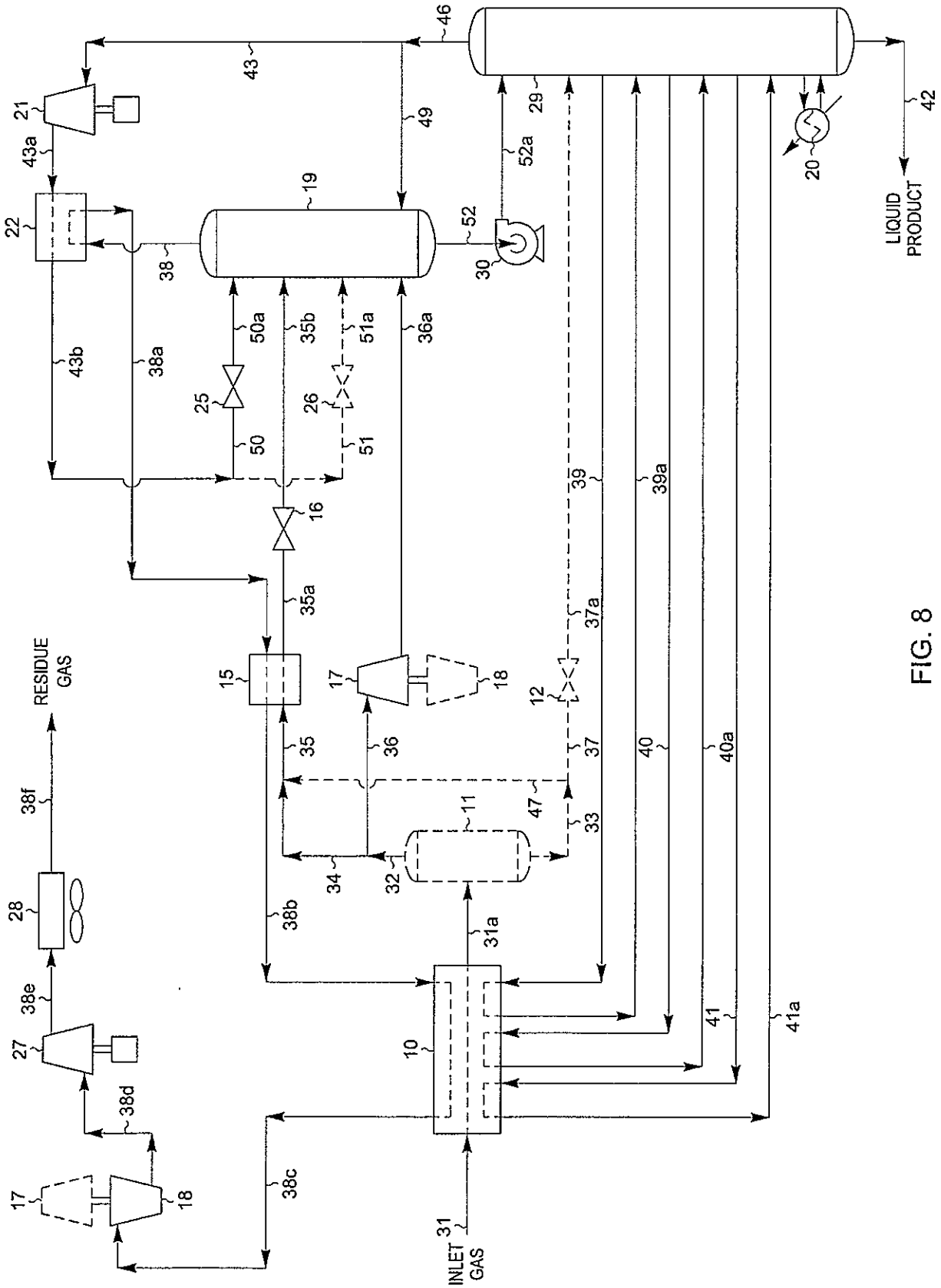
RESIDUE GAS
INLET GAS
LIQUID PRODUCT
10
11
12
15
16
17
18
19
20
21
22
25
26
27
28
29
30
31
31a
32
33
34
35
35a
36
36a
37
37a
38
38a
38b
38c
38d
38e
38f
39
39a
40
40a
41
41a
42
43
43a
43b
46
47
49
50
50a
51
51a
52
52a

FIG. 8

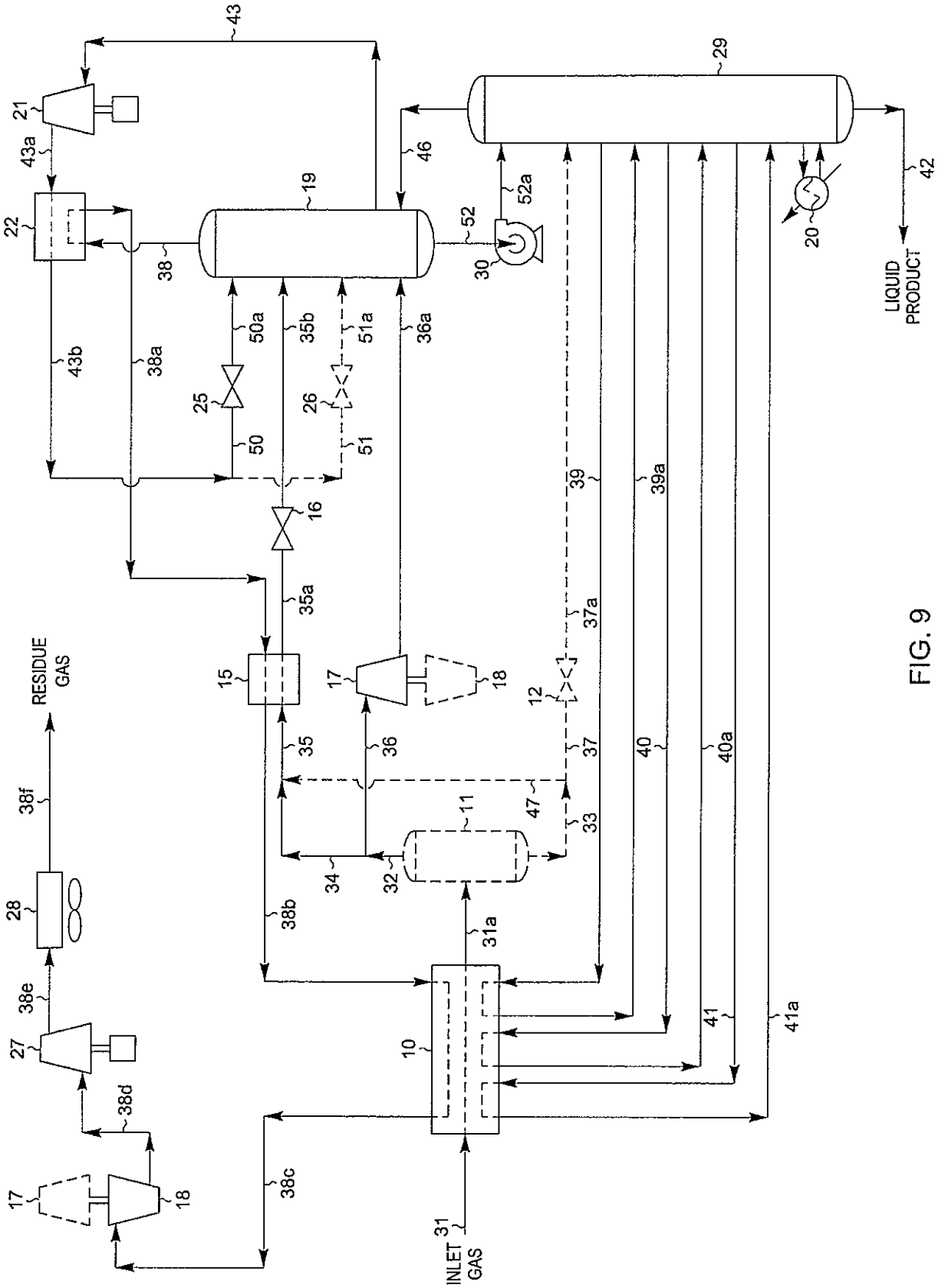

FIG. 9

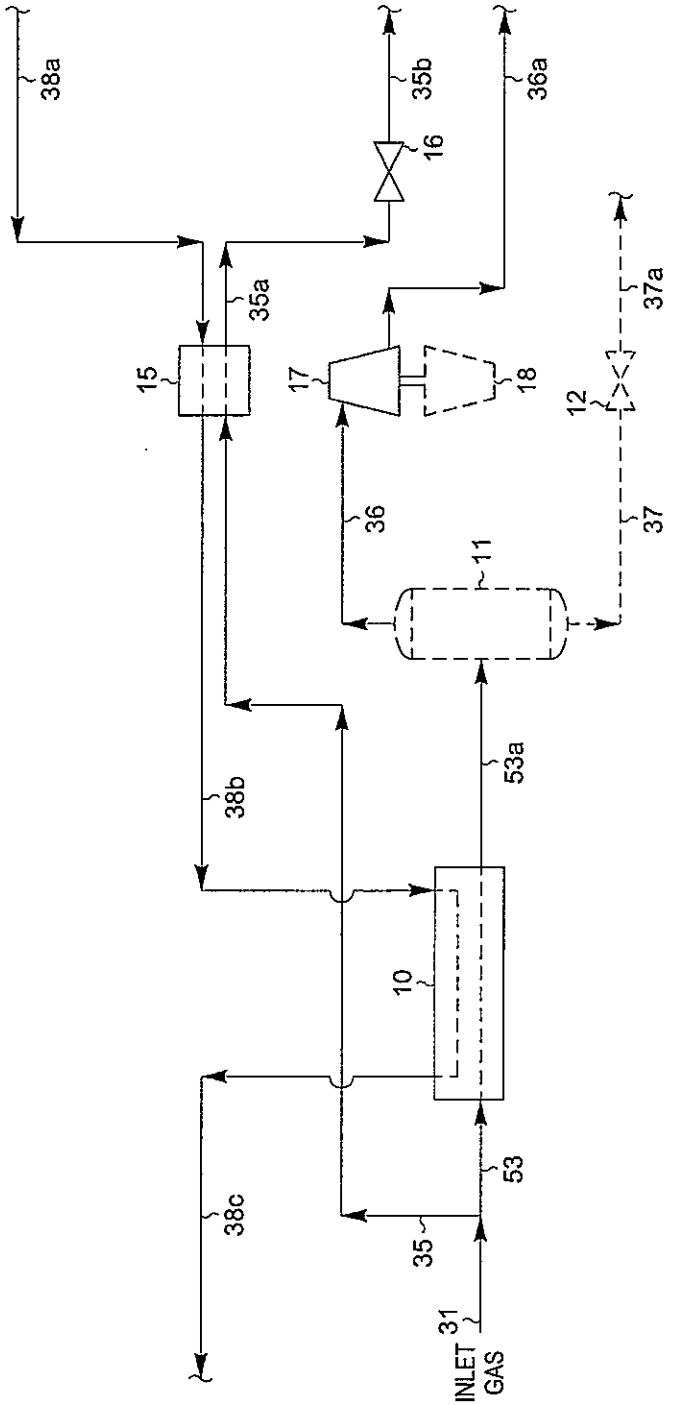
38a
35b
36a
16
35a
37a
15
17
18
12
36
37
11
53a
38b
10
53
38c
35
31
INLET GAS

FIG. 10

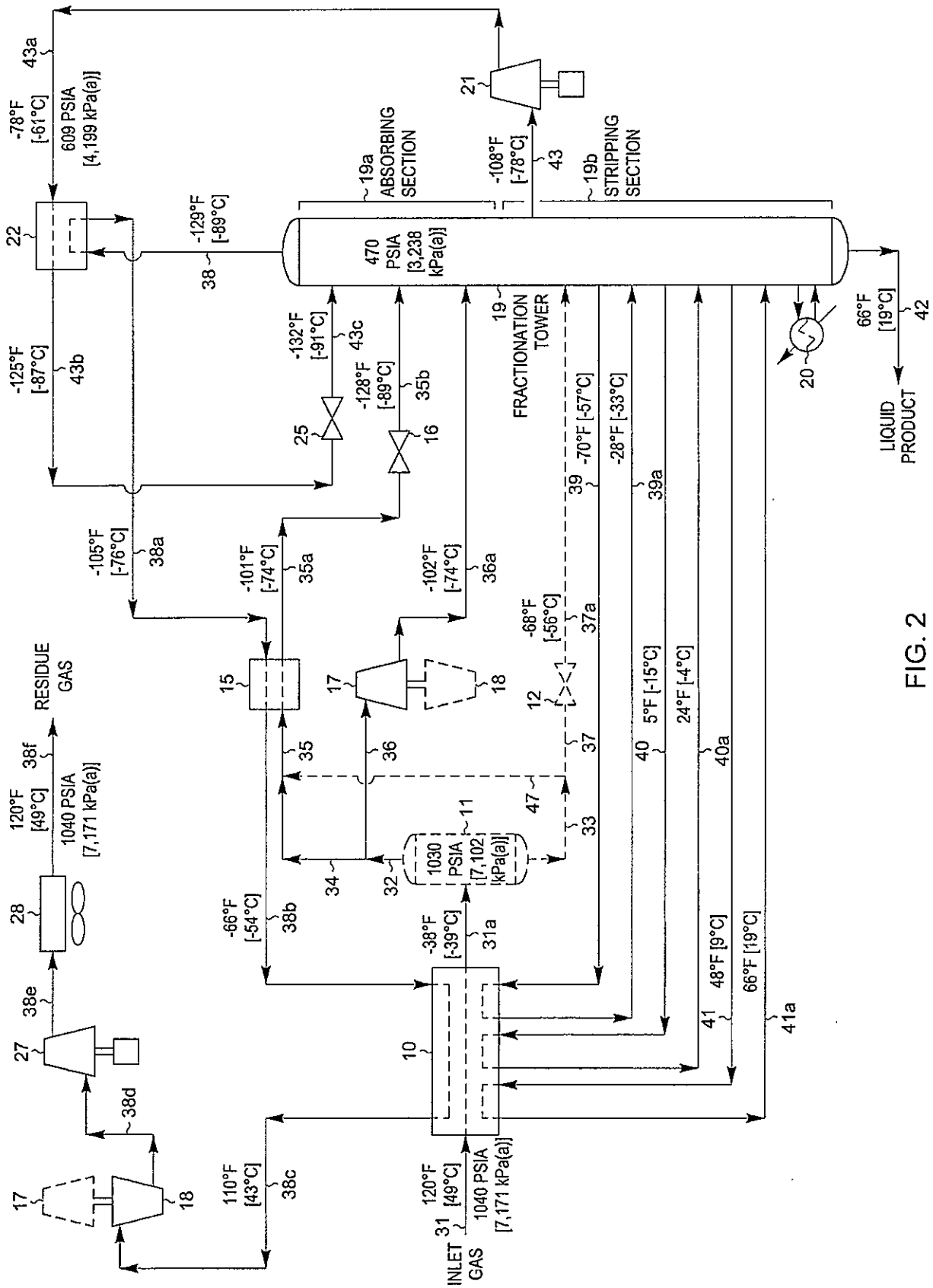
INLET GAS
31
120°F [49°C]
1040 PSIA [7,171 kPa(a)]
RESIDUE GAS
38f
120°F [49°C]
1040 PSIA [7,171 kPa(a)]
LIQUID PRODUCT
42
66°F [19°C]
FRACTIONATION TOWER
19
470 PSIA [3,238 kPa(a)]
19a ABSORBING SECTION
19b STRIPPING SECTION
609 PSIA [4,199 kPa(a)]
-78°F [-61°C]
43a
-108°F [-78°C]
43
-129°F [-89°C]
38
-125°F [-87°C]
43b
-132°F [-91°C]
43c
-128°F [-89°C]
35b
-105°F [-76°C]
38a
-101°F [-74°C]
35a
-102°F [-74°C]
36a
-70°F [-57°C]
39
-28°F [-33°C]
39a
-68°F [-56°C]
37a
5°F [-15°C]
40
24°F [-4°C]
40a
48°F [9°C]
41
66°F [19°C]
41a
-66°F [-54°C]
38b
-38°F [-39°C]
31a
1030 PSIA [7,102 kPa(a)]
11
110°F [43°C]
38c
38d
38e
10
12
15
16
17
18
20
21
22
25
27
28
32
33
34
35
36
37
47

FIG. 2