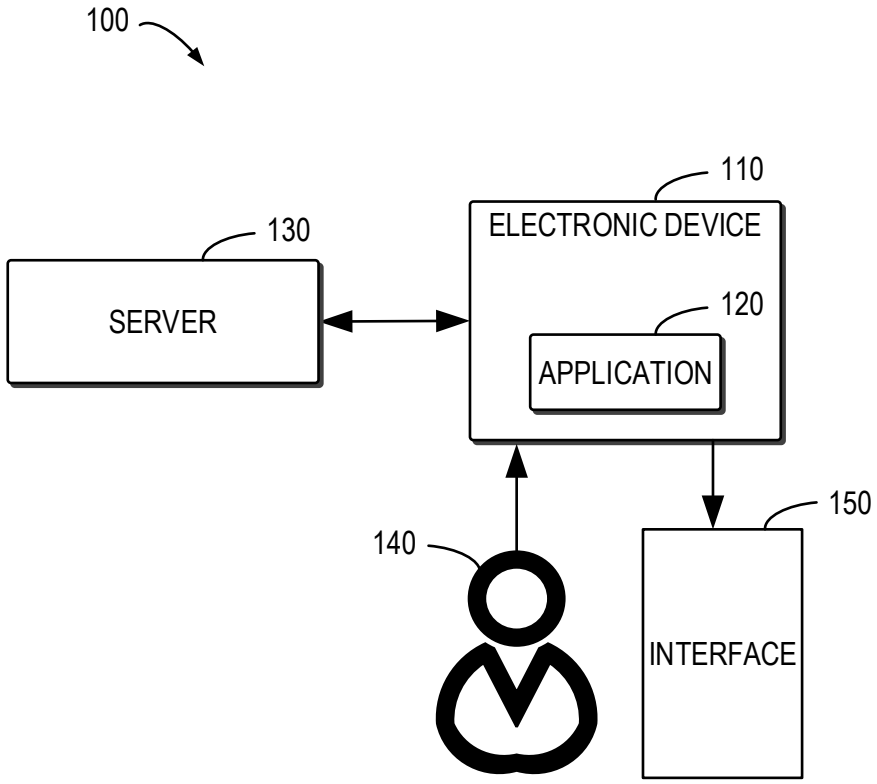
100
110
ELECTRONIC DEVICE
130
SERVER
120
APPLICATION
150
140
INTERFACE

FIG. 1

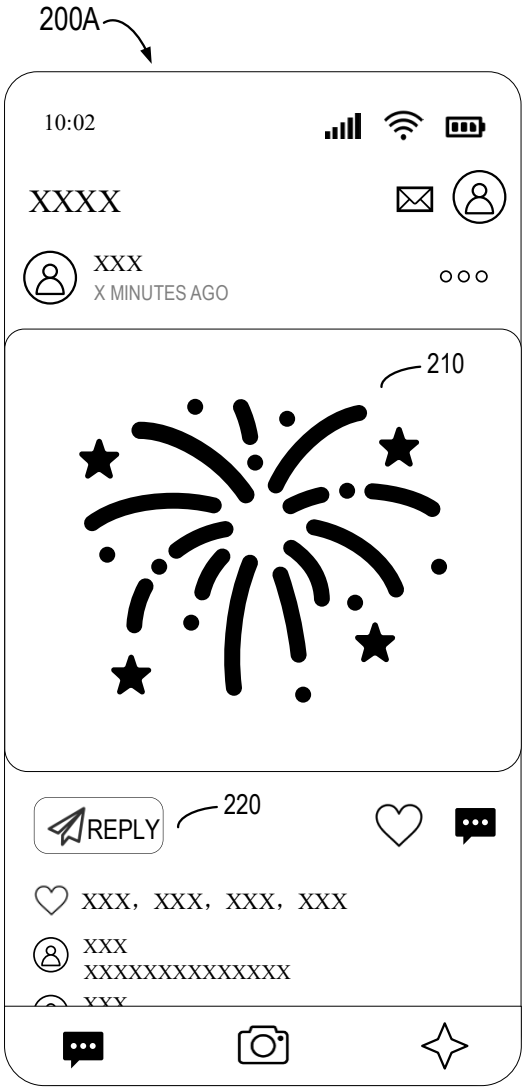
200A
10:02
XXXX
xxx
X MINUTES AGO
210
REPLY
220
xxx, xxx, xxx, xxx
xxx
xxxxxxxxxxxxxx

FIG. 2A


200B
10:02
XXXX
xxx
X MINUTES AGO
230
REPLY xxx...
q w e r t y u i o p
a s d f g h j k l
z x c v b n m
?123

FIG. 2B

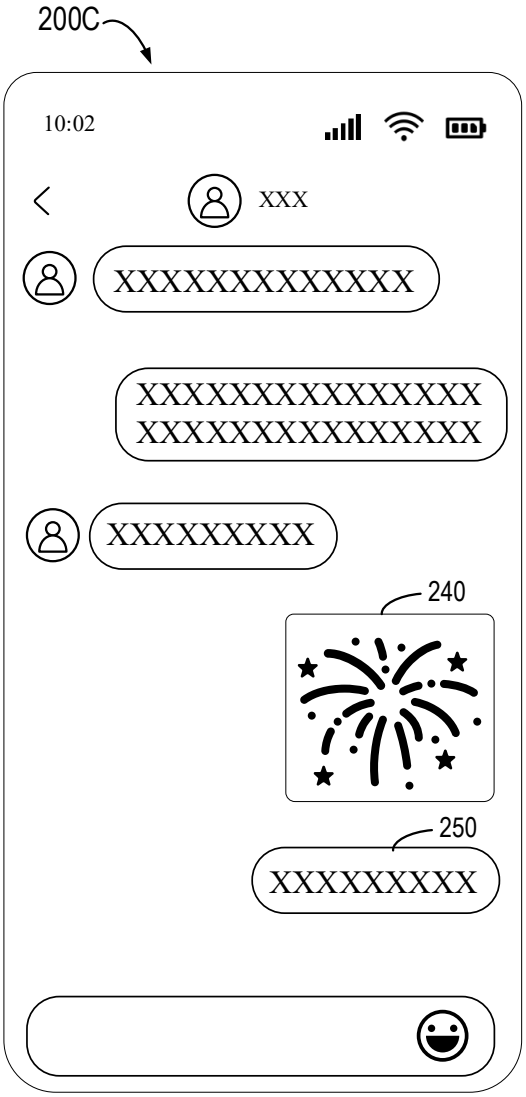
200C
10:02
XXX
XXXXXXXXXXXXX
XXXXXXXXXXXXXXX
XXXXXXXXXXXXXXX
XXXXXXXXX
240
250
XXXXXXXXX

FIG. 2C

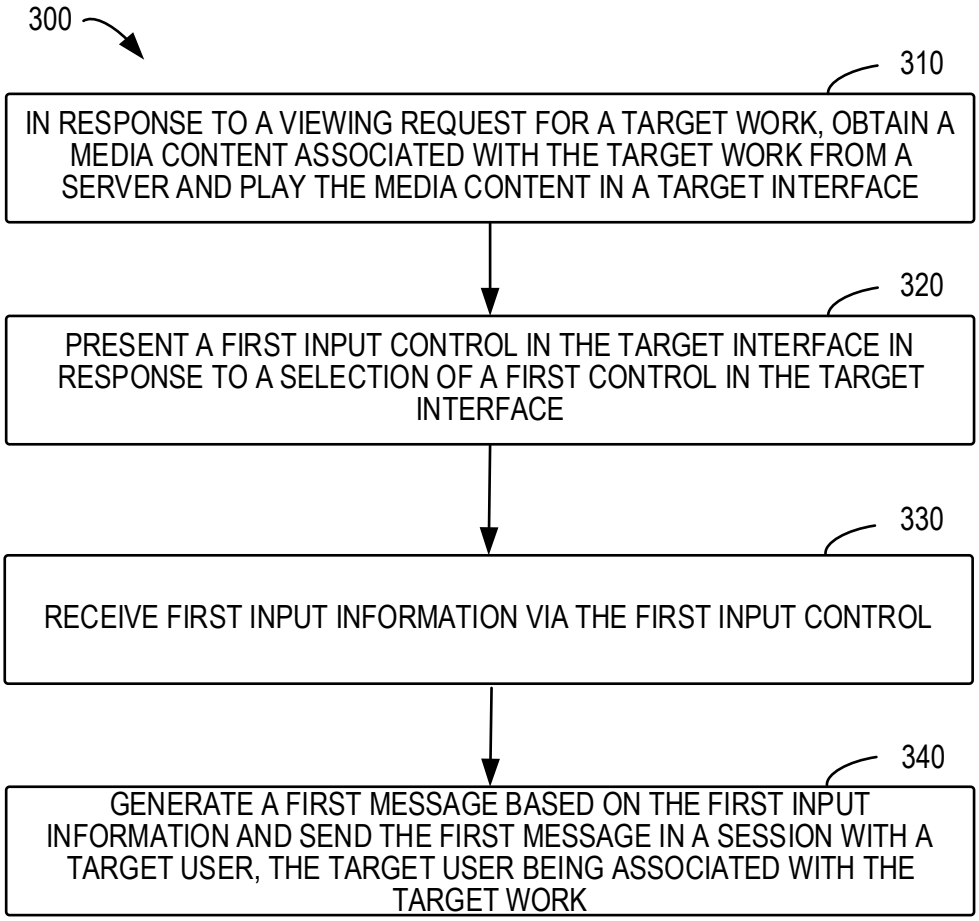
300
310
IN RESPONSE TO A VIEWING REQUEST FOR A TARGET WORK, OBTAIN A MEDIA CONTENT ASSOCIATED WITH THE TARGET WORK FROM A SERVER AND PLAY THE MEDIA CONTENT IN A TARGET INTERFACE
320
PRESENT A FIRST INPUT CONTROL IN THE TARGET INTERFACE IN RESPONSE TO A SELECTION OF A FIRST CONTROL IN THE TARGET INTERFACE
330
RECEIVE FIRST INPUT INFORMATION VIA THE FIRST INPUT CONTROL
340
GENERATE A FIRST MESSAGE BASED ON THE FIRST INPUT INFORMATION AND SEND THE FIRST MESSAGE IN A SESSION WITH A TARGET USER, THE TARGET USER BEING ASSOCIATED WITH THE TARGET WORK

FIG. 3

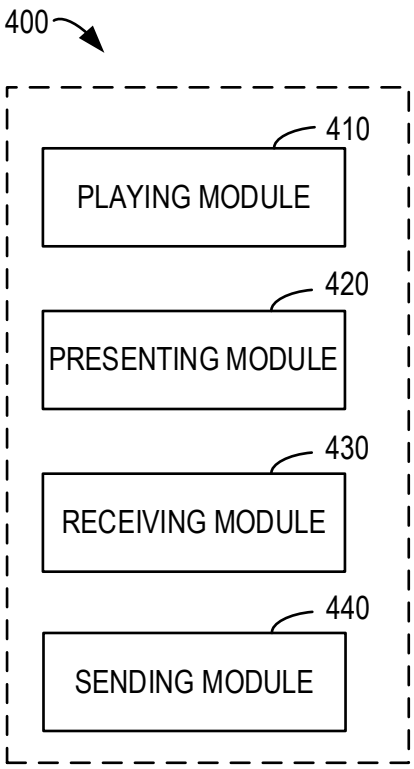
400
410
PLAYING MODULE
420
PRESENTING MODULE
430
RECEIVING MODULE
440
SENDING MODULE

FIG. 4

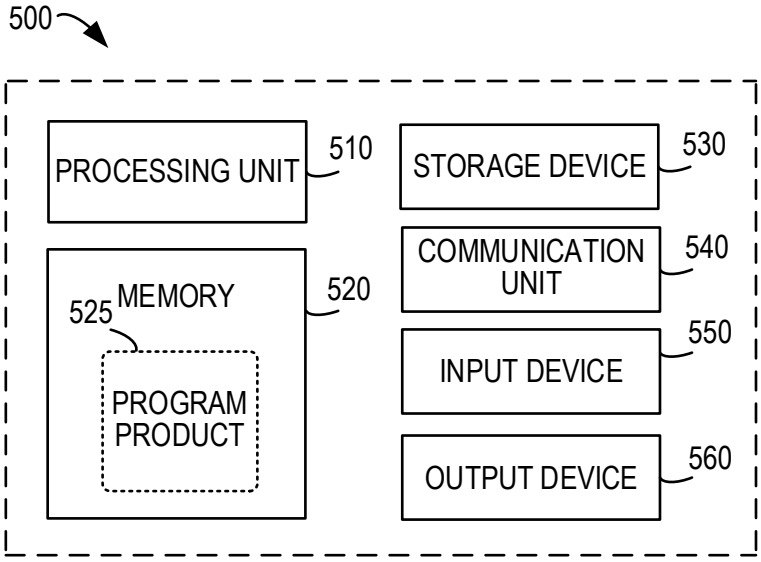
500
PROCESSING UNIT
510
MEMORY
525
PROGRAM PRODUCT
520
STORAGE DEVICE
530
COMMUNICATION UNIT
540
INPUT DEVICE
550
OUTPUT DEVICE
560

FIG. 5