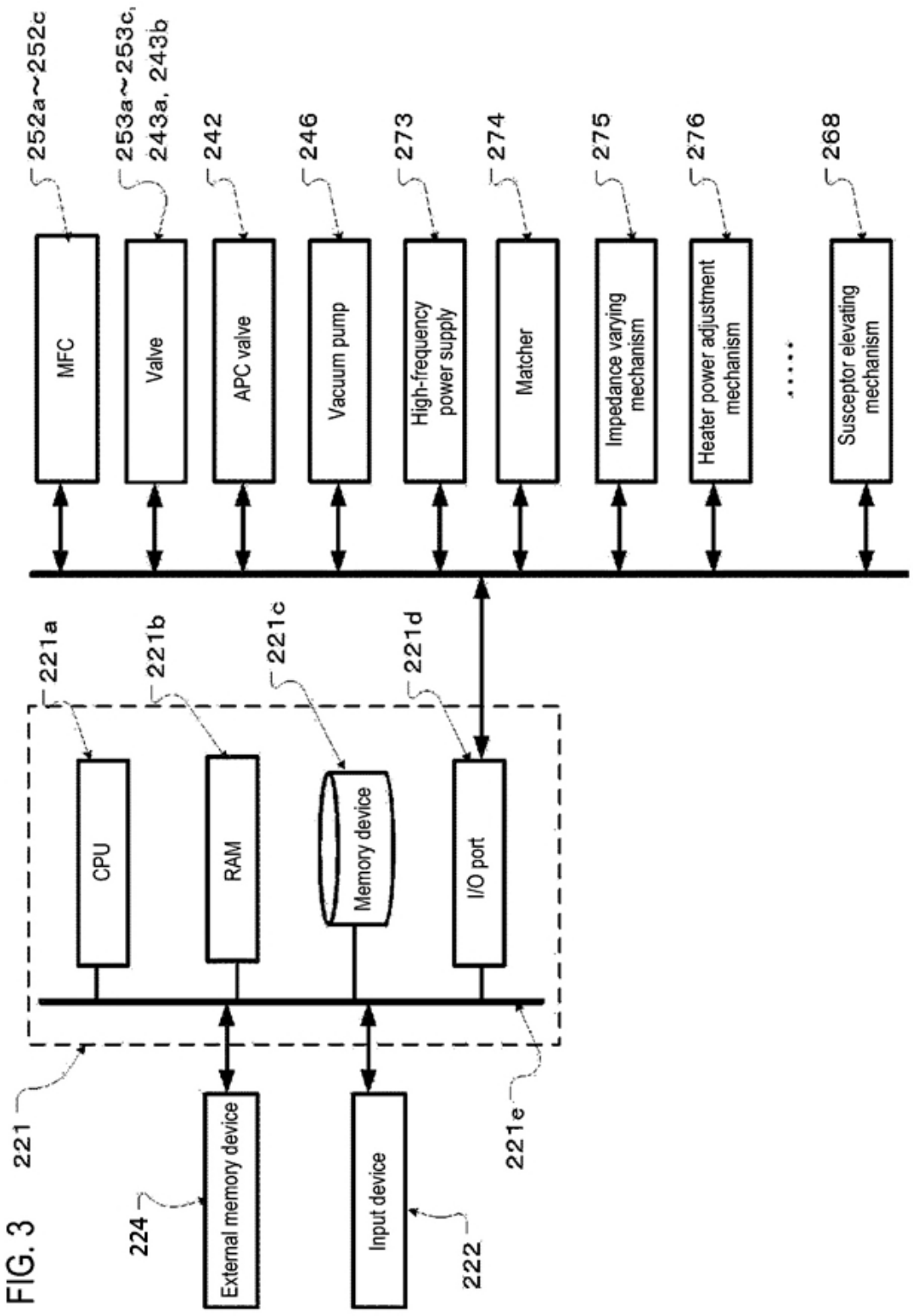
252a~252c
253a~253c, 243a, 243b
242
246
273
274
275
276
268
MFC
Valve
APC valve
Vacuum pump
High-frequency power supply
Matcher
Impedance varying mechanism
Heater power adjustment mechanism
.....
Susceptor elevating mechanism
221a
221b
221c
221d
CPU
RAM
Memory device
I/O port
221
221e
224
External memory device
Input device
222

FIG. 3