Fig.1

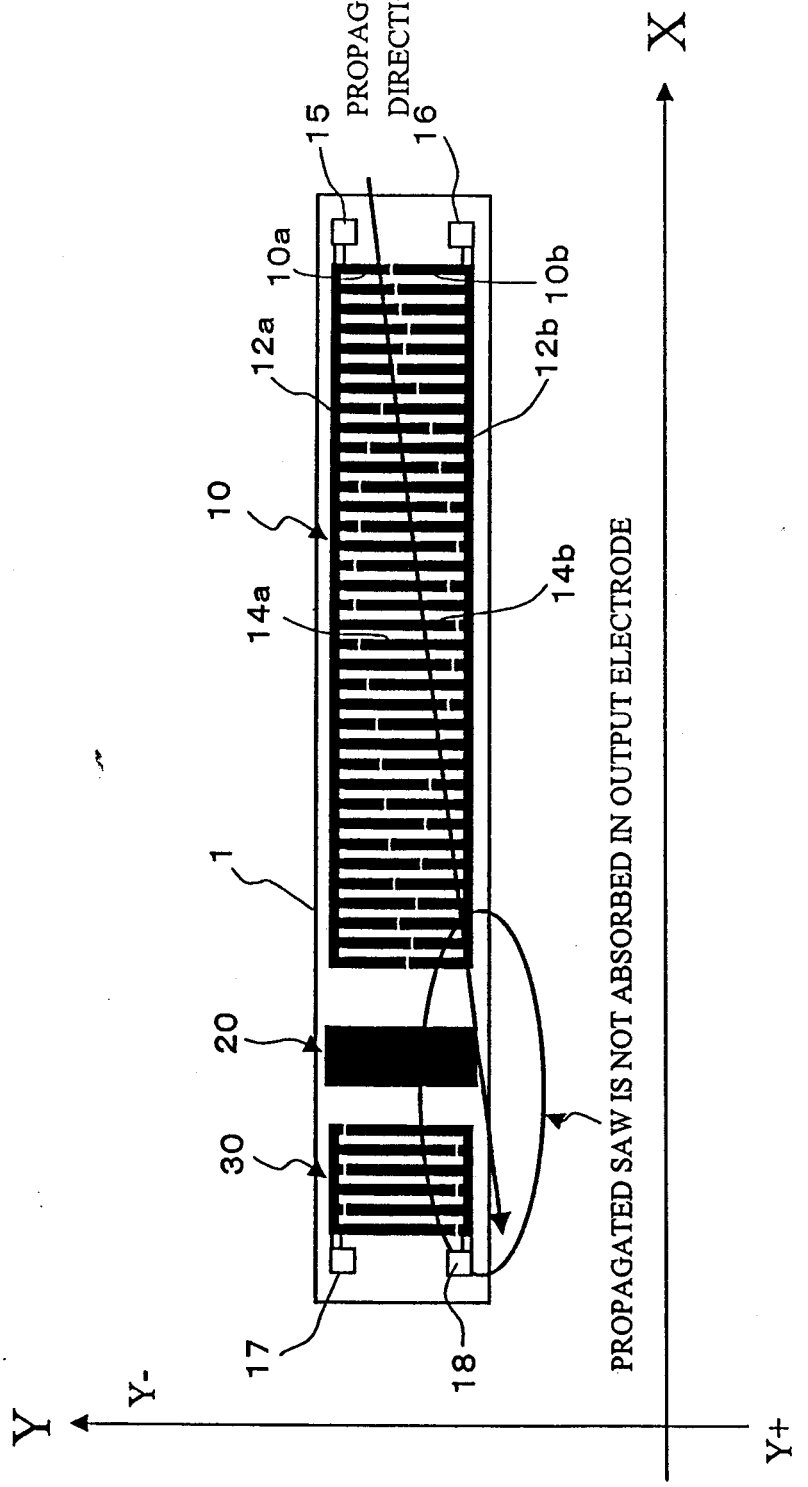
X
PROPAGATION DIRECTION
15
16
10a
10b
12a
12b
10
14a
14b
1
20
30
17
18
PROPAGATED SAW IS NOT ABSORBED IN OUTPUT ELECTRODE
Y
Y-
Y+

Fig.2

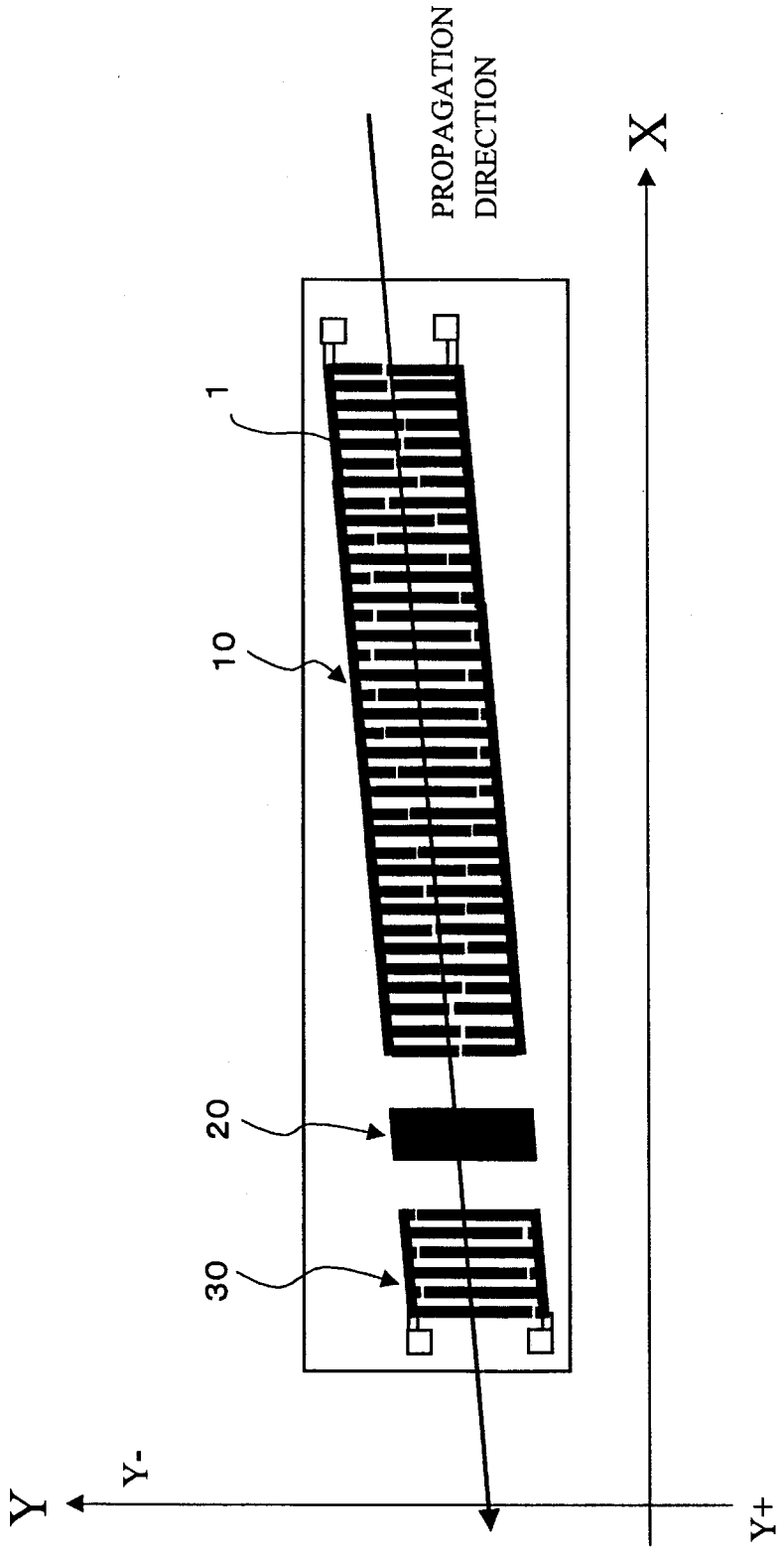

Fig.3

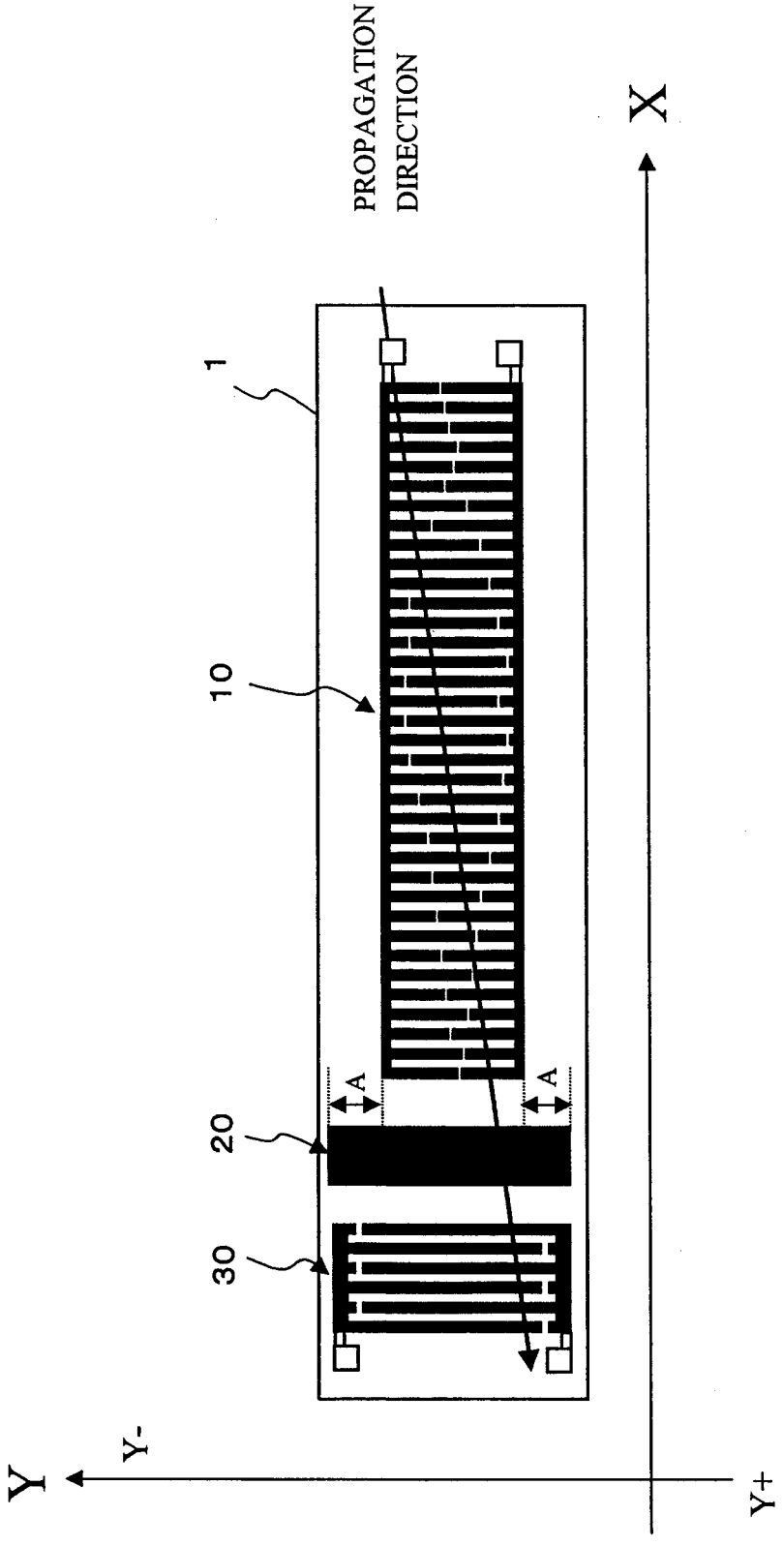

Fig.4

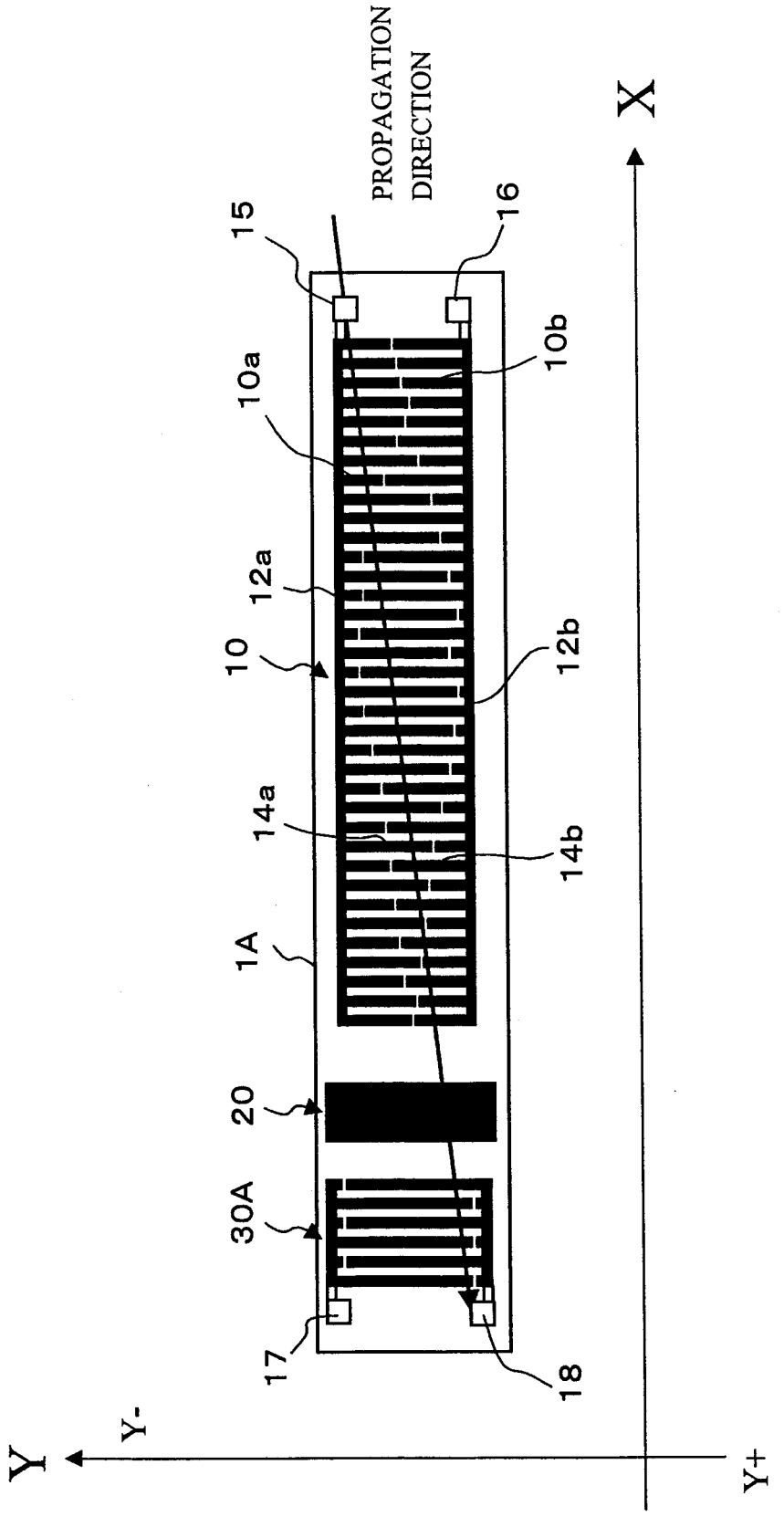
PROPAGATION DIRECTION
X
15
16
10b
10a
12a
10
12b
14a
14b
1A
20
30A
17
18
Y
Y-
Y+

Fig.5

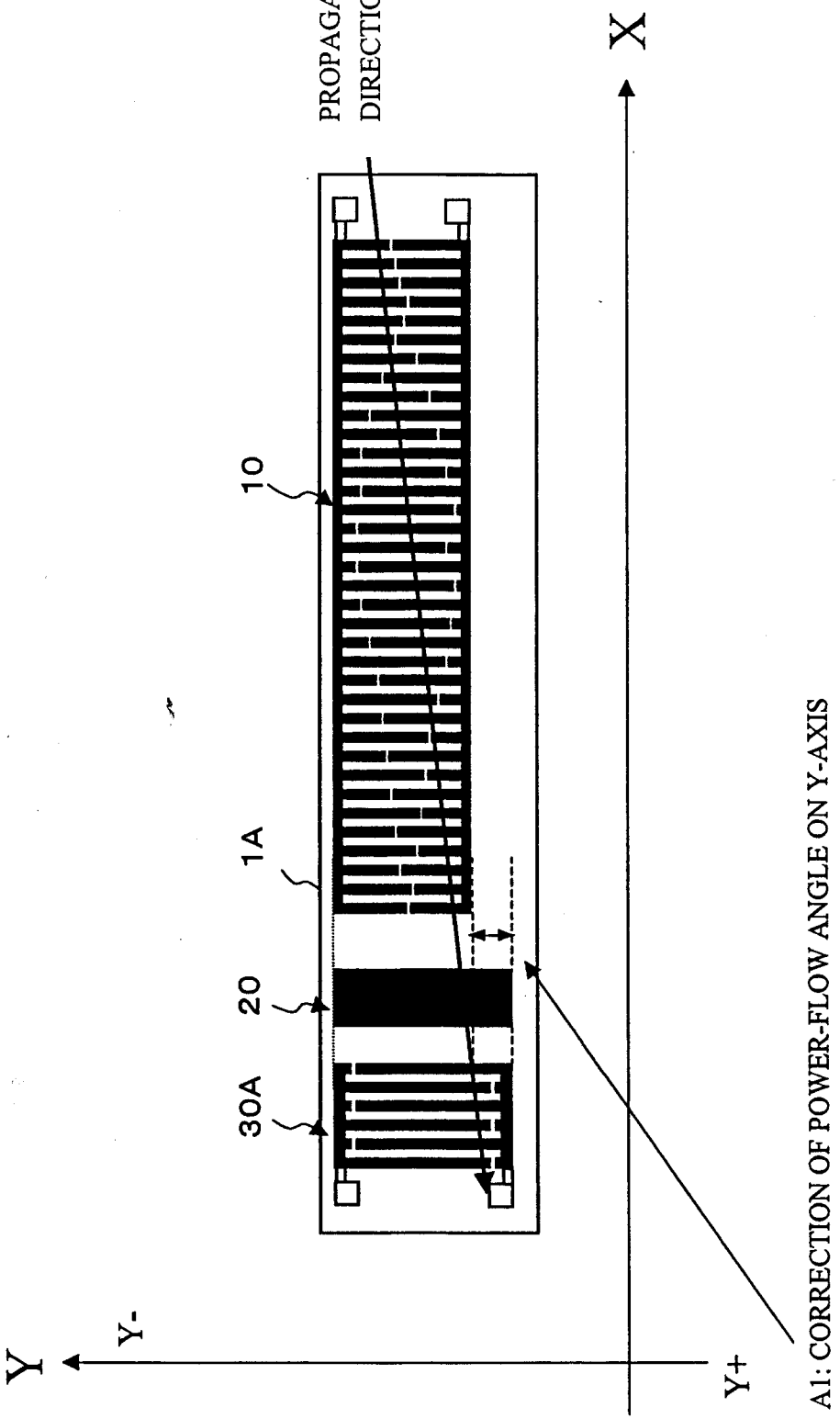
PROPAGATION DIRECTION
X
10
1A
20
30A
Y
Y-
Y+
A1: CORRECTION OF POWER-FLOW ANGLE ON Y-AXIS

Fig.6A

Fig.6B

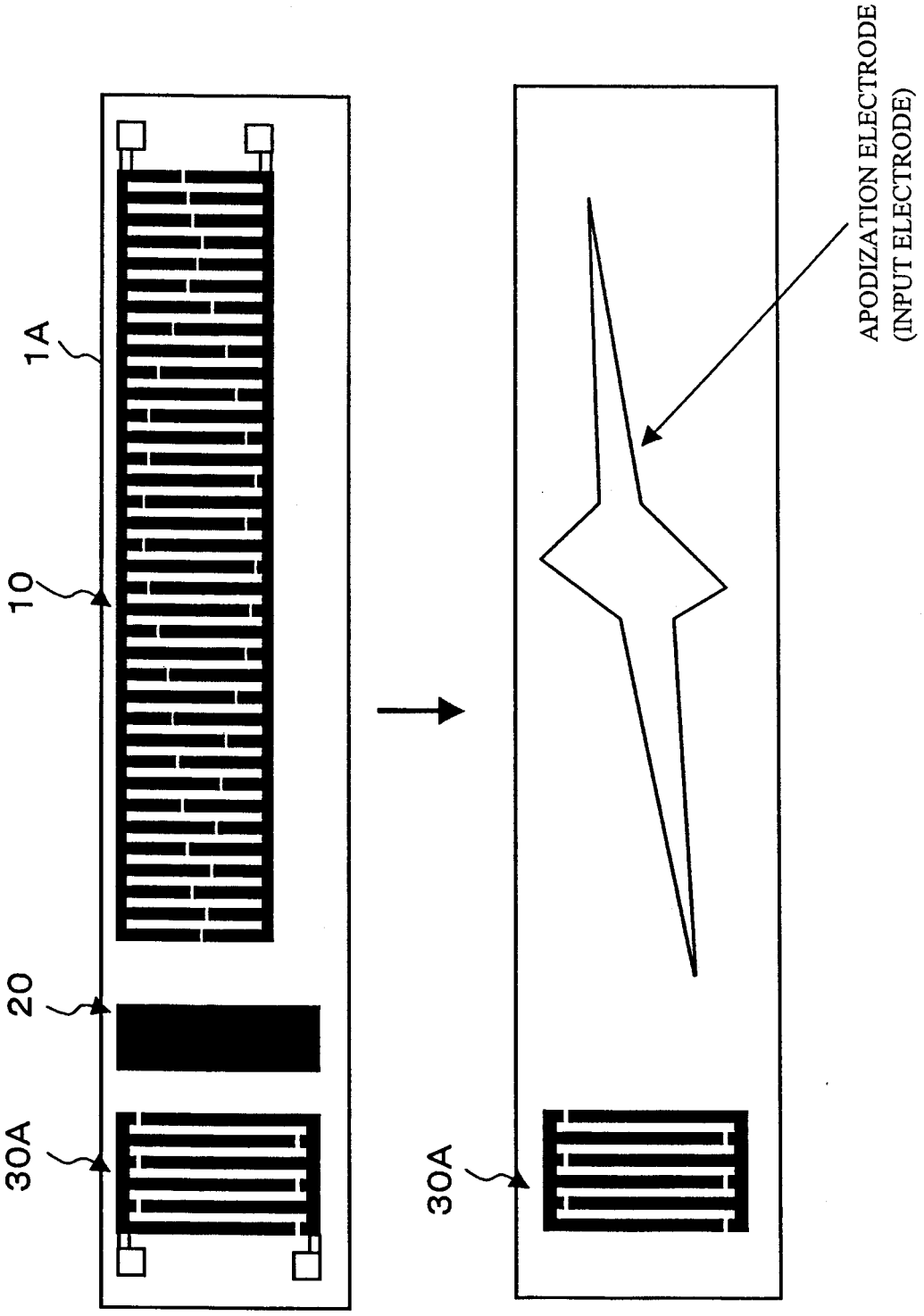

Fig.7

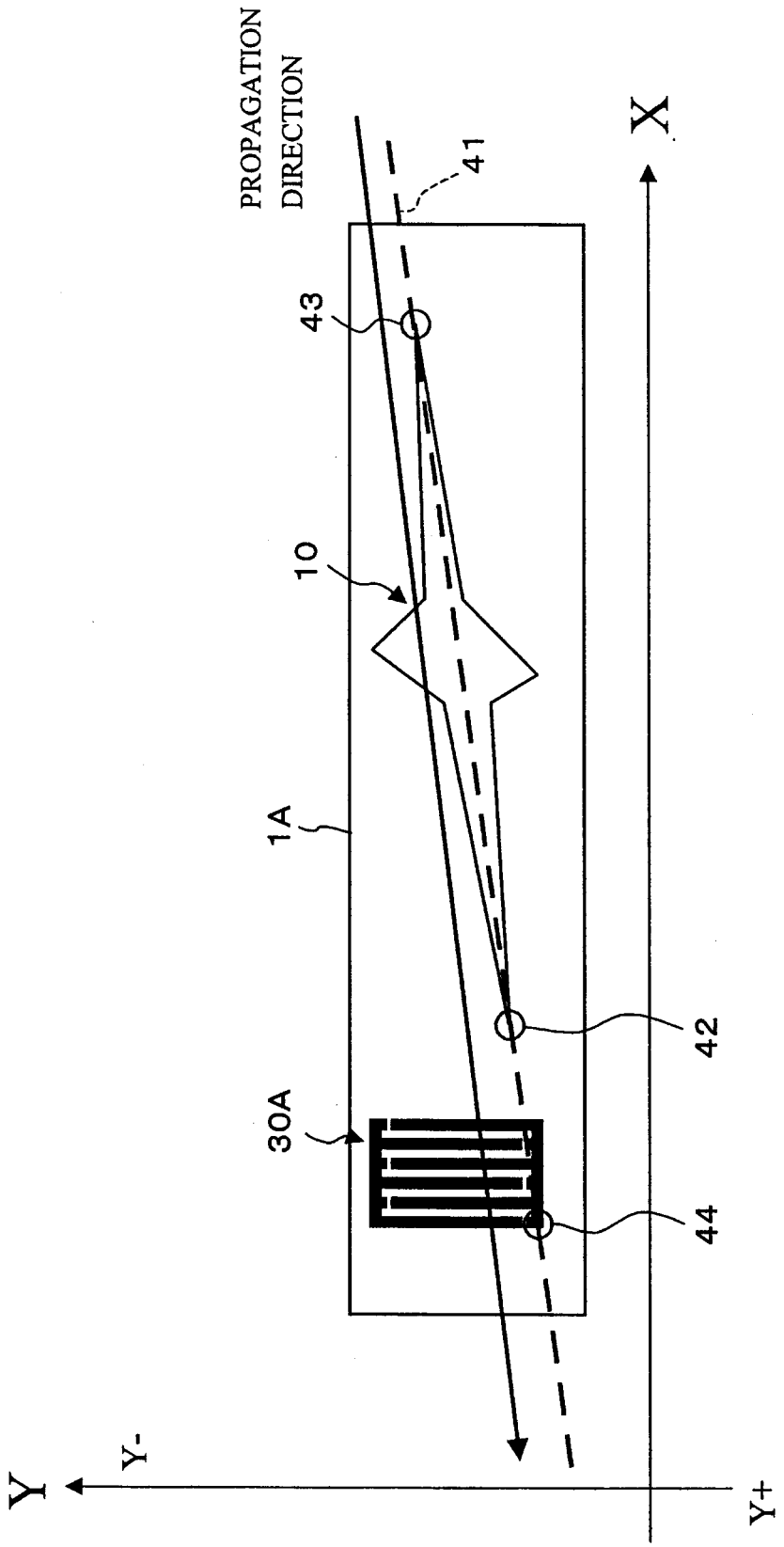

Fig.8

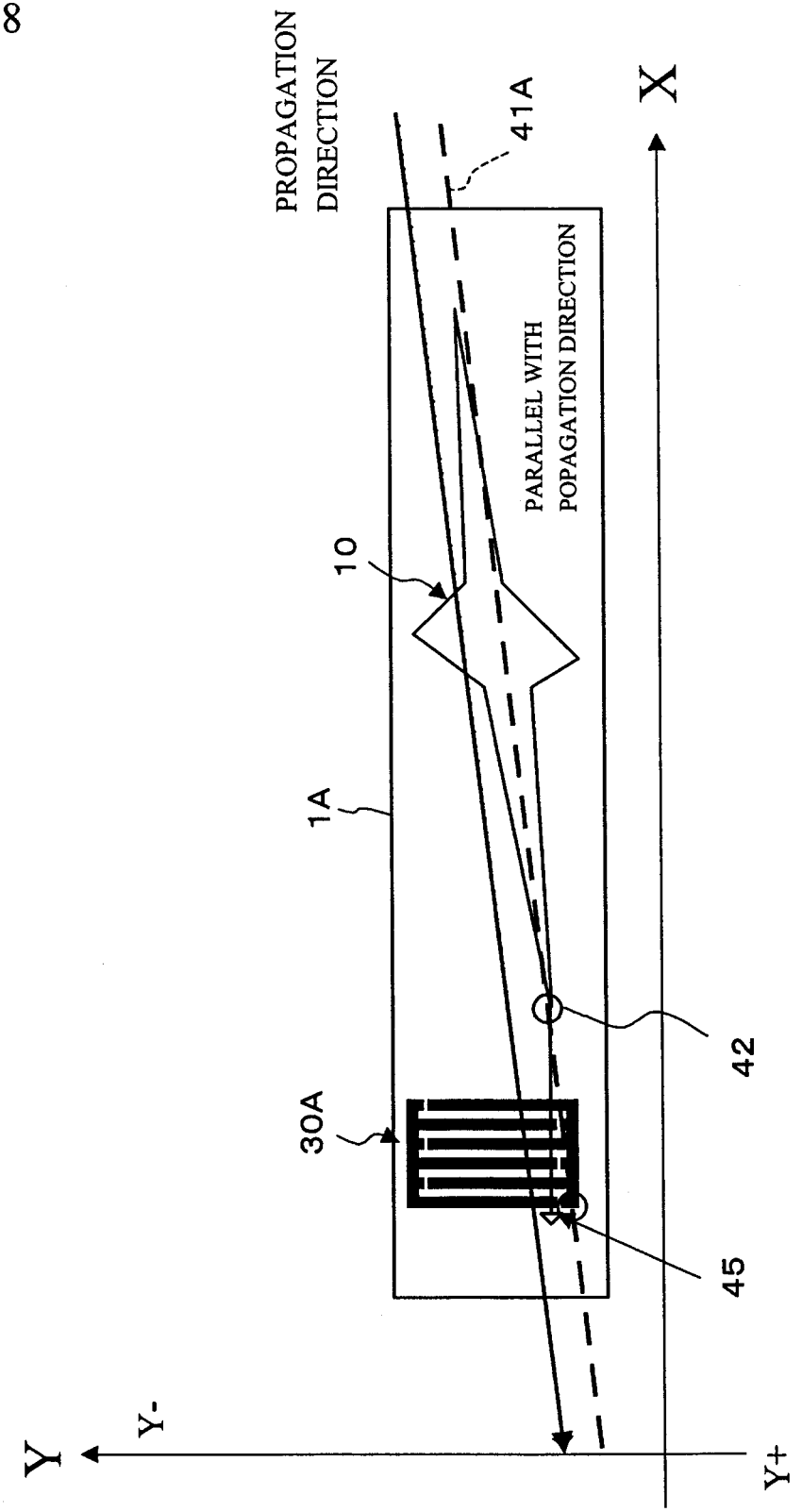
PROPAGATION DIRECTION
41A
X
PARALLEL WITH POPAGATION DIRECTION
10
1A
30A
42
45
Y
Y-
Y+

Fig.9

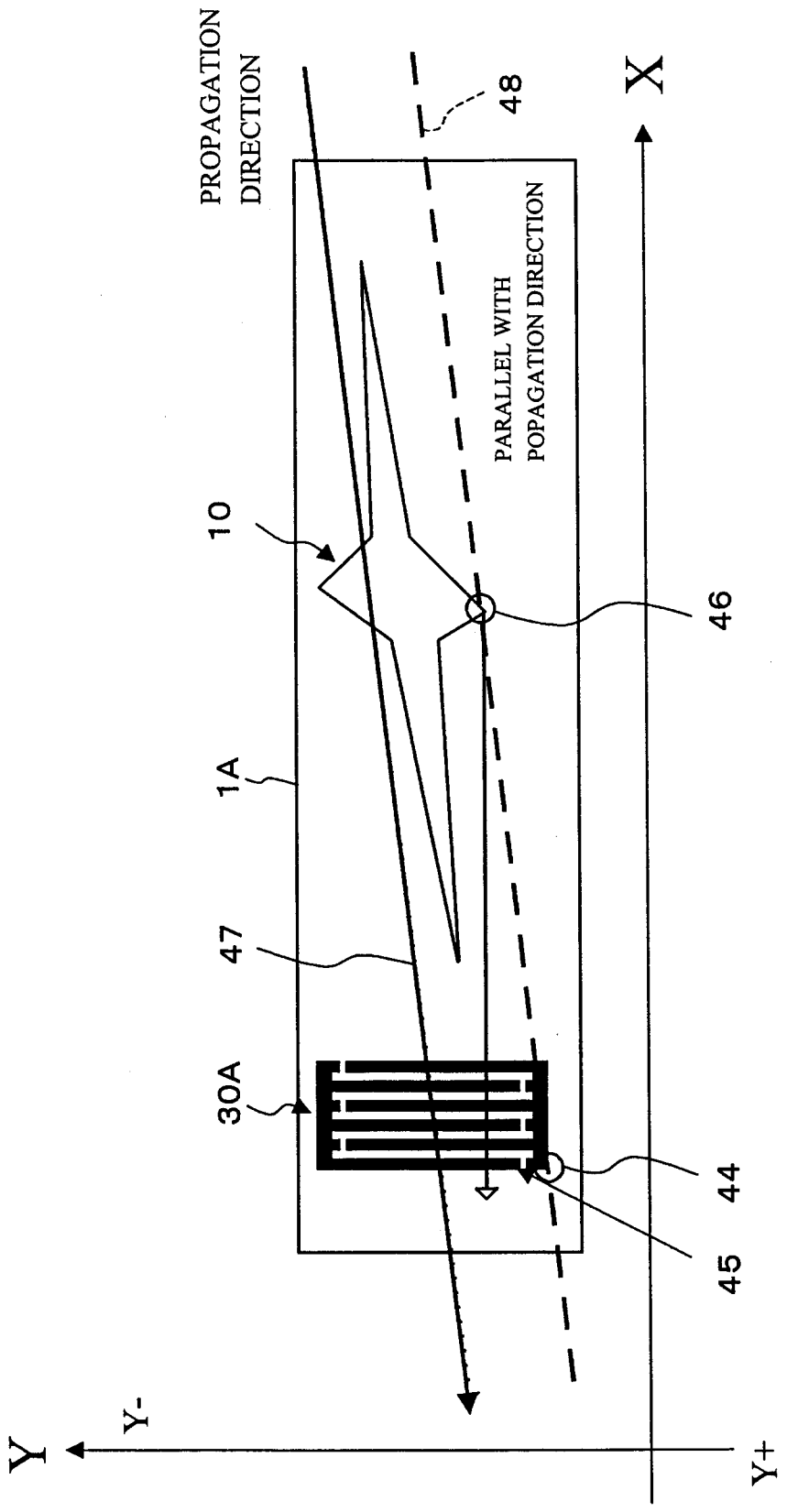
PROPAGATION DIRECTION
48
X
PARALLEL WITH POPAGATION DIRECTION
10
46
1A
47
30A
44
45
Y
Y-
Y+

Fig.10

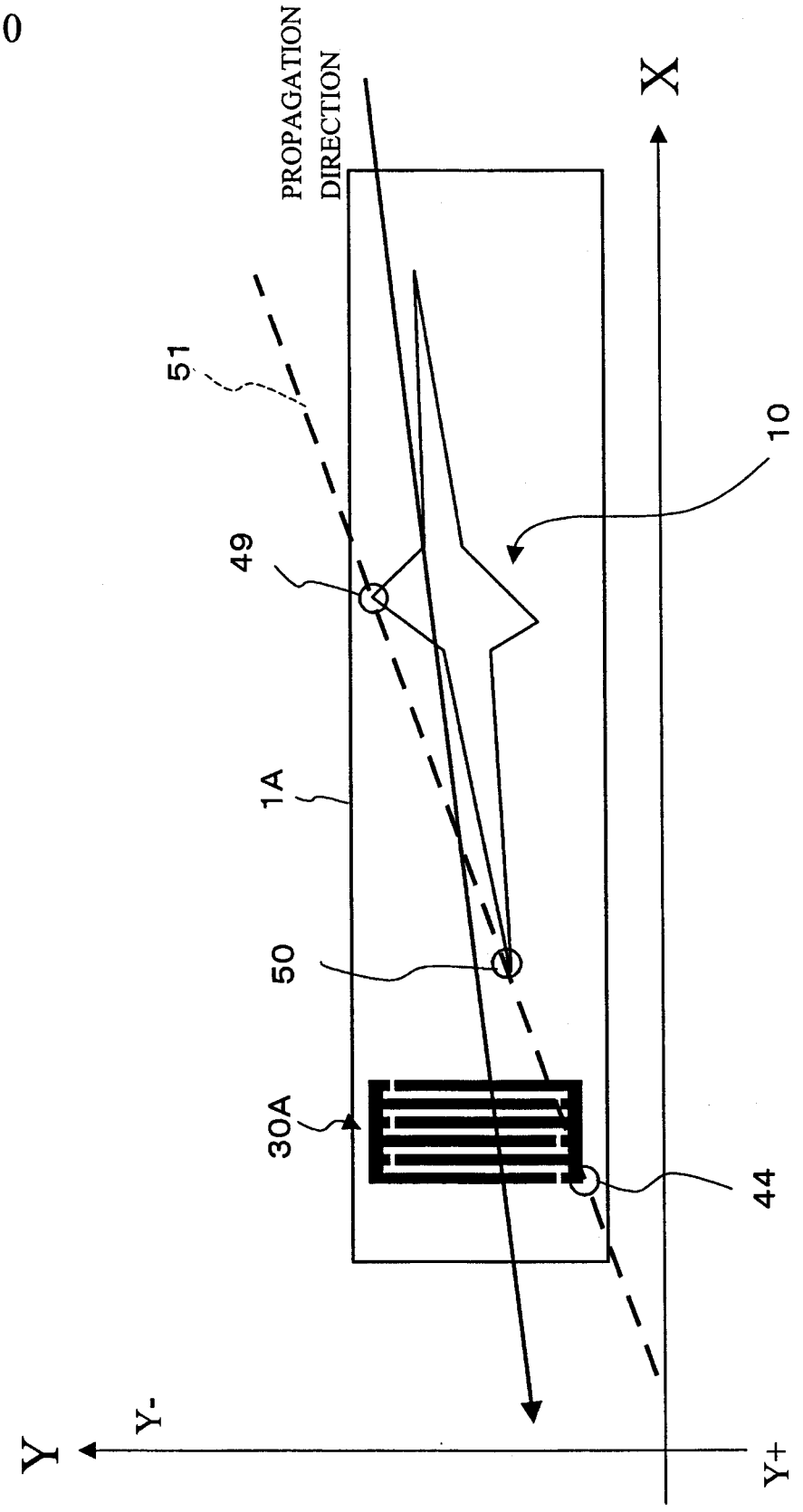

Fig.11

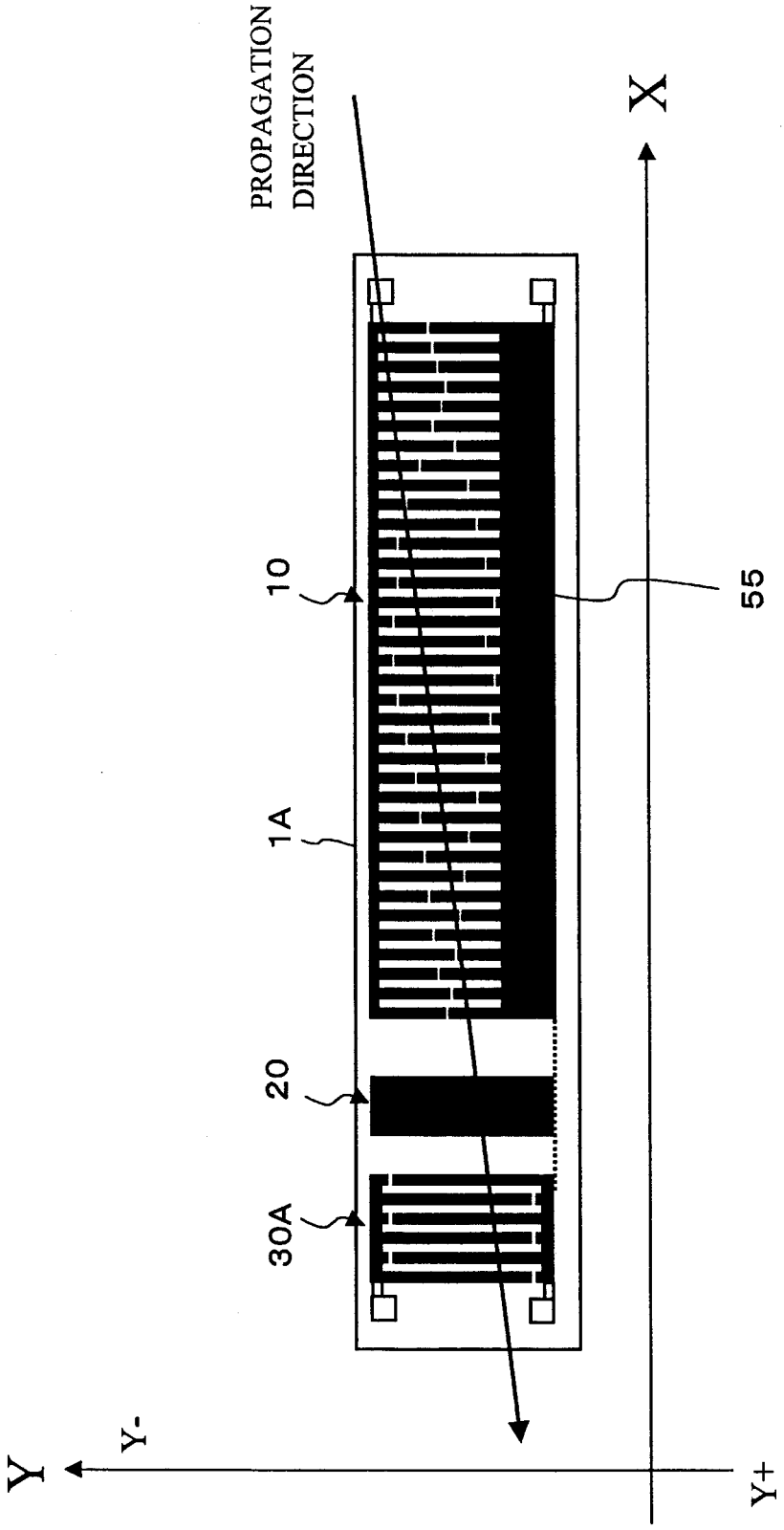

Fig.12

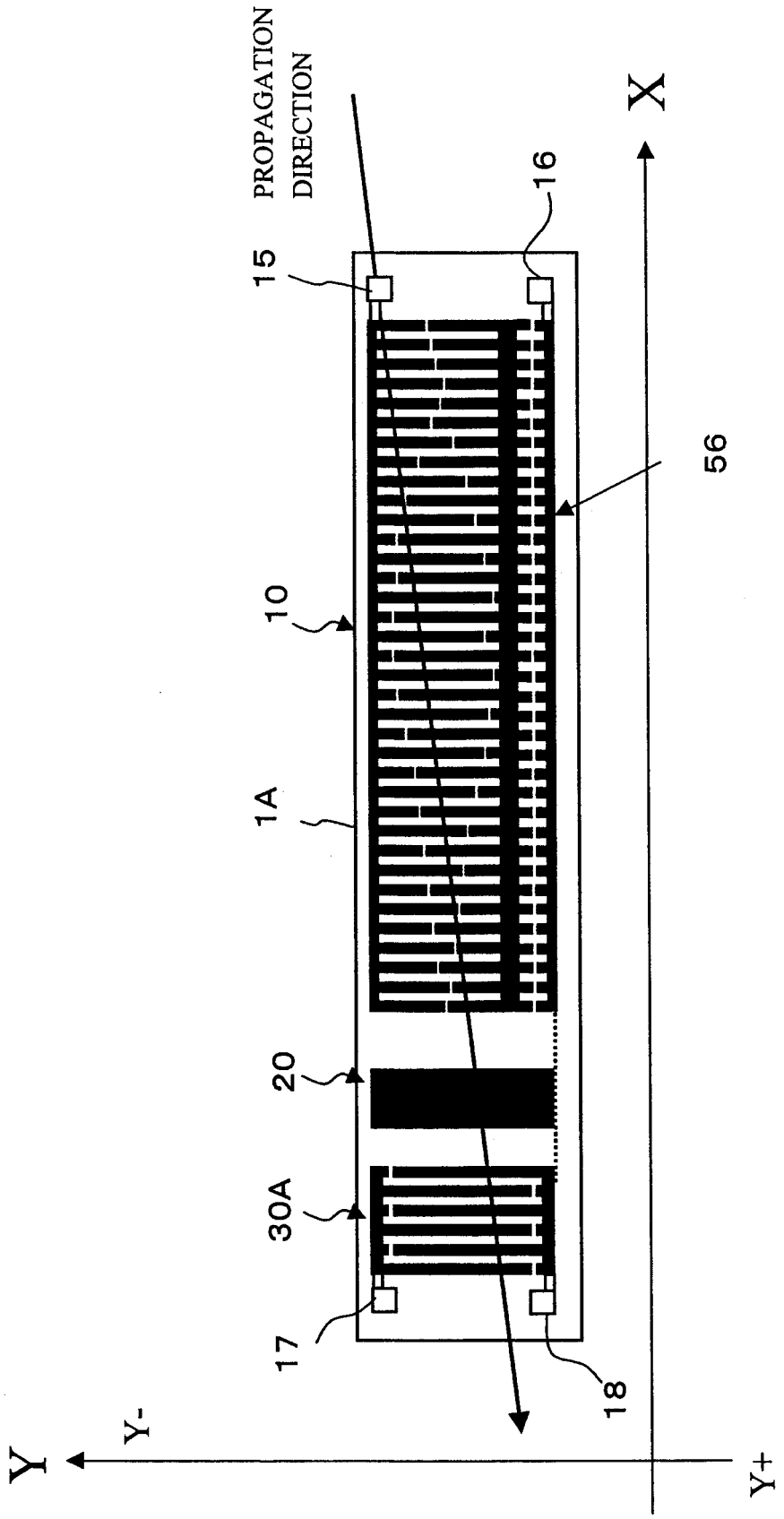

Fig.13

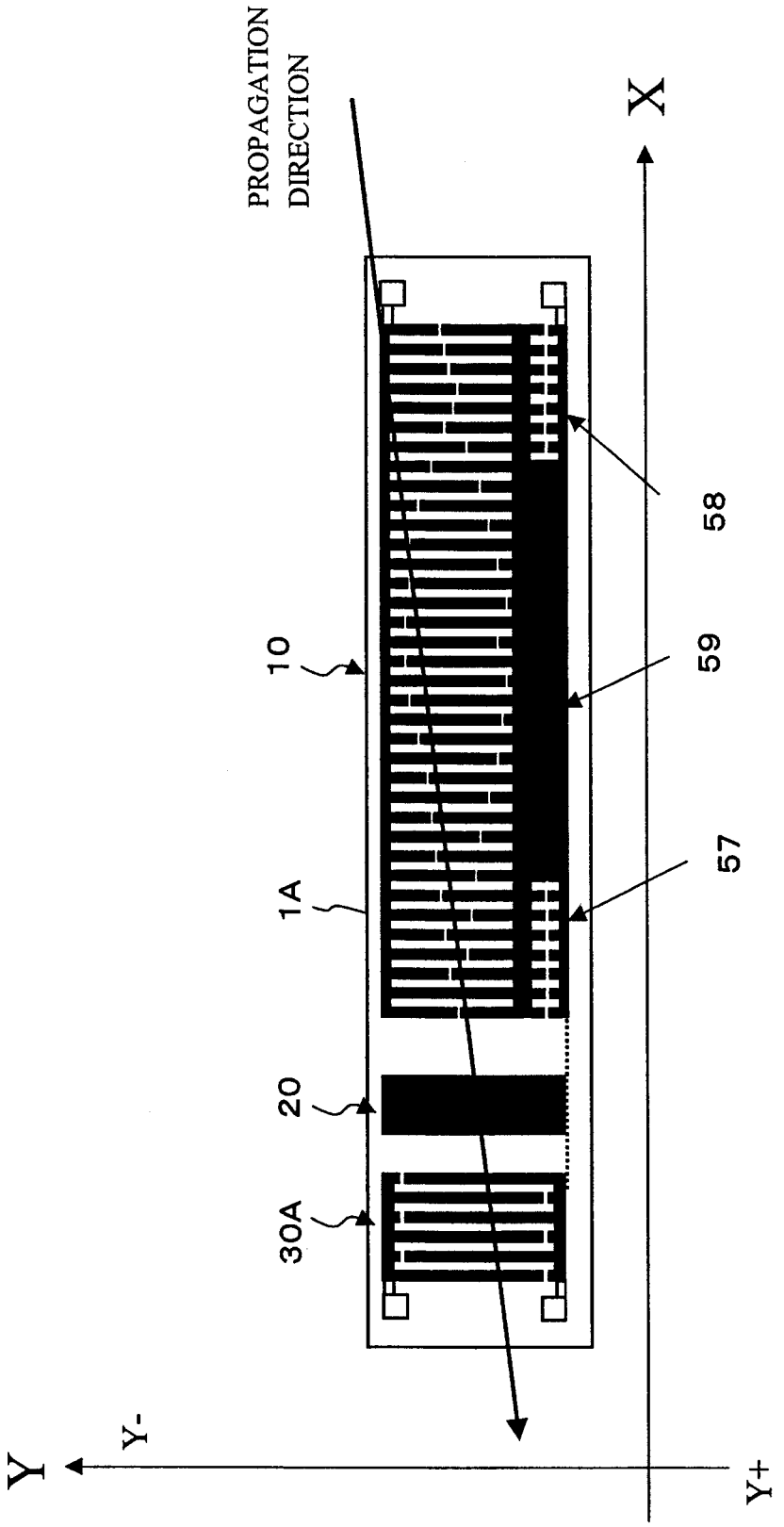

Fig.14

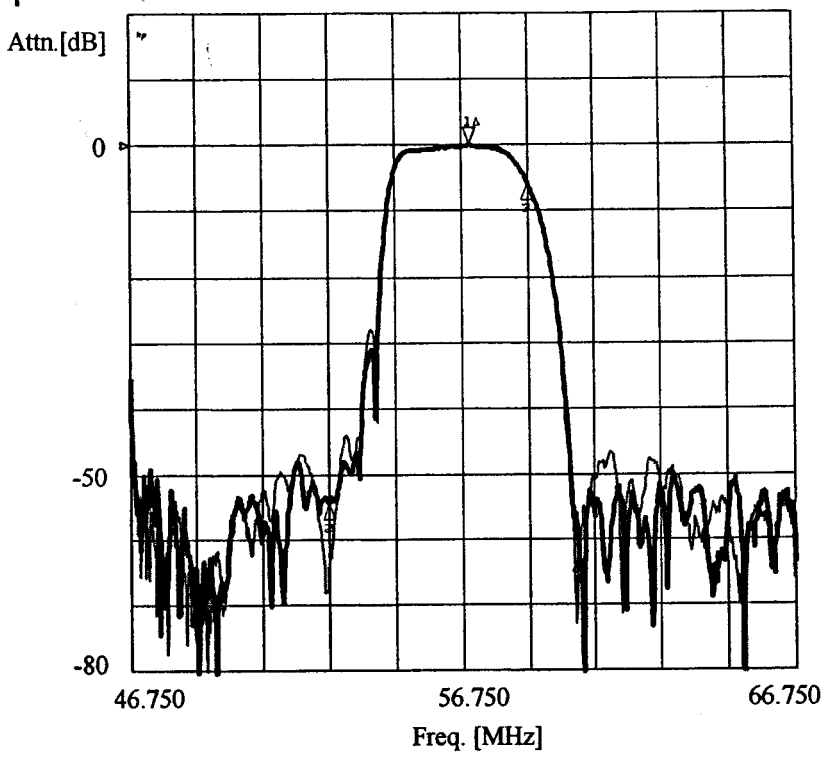

THICK LINE:

THE SECOND EMBODIMENT

THIN LINE:

CONVENTIONAL TECHNIQUE

Fig.15

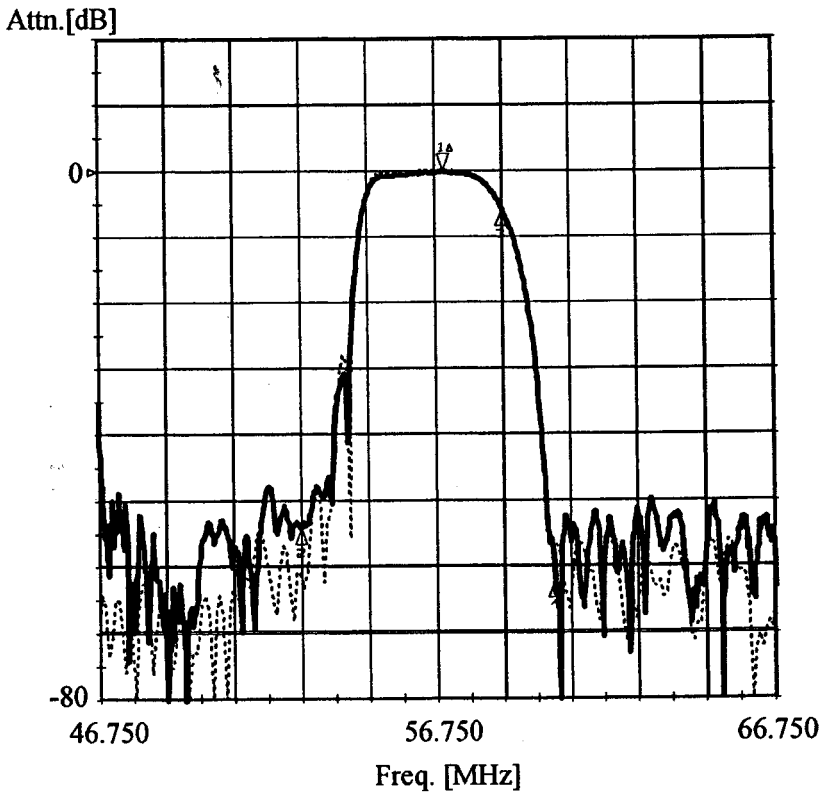

THICK LINE:

THE SECOND EMBODIMENT

THIN LINE:

THE EIGHTH EMBODIMENT