Fig. 1

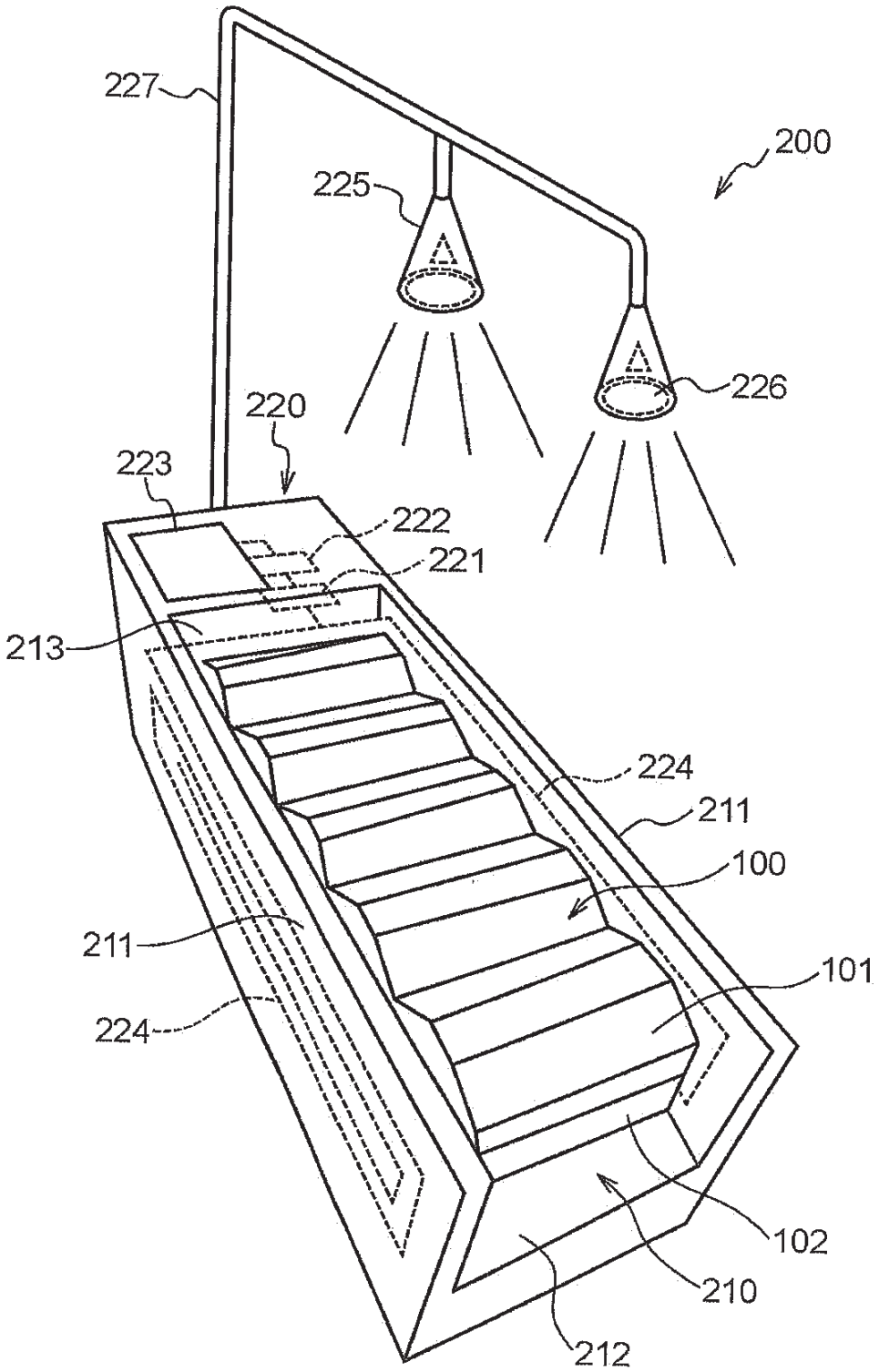
227
200
225
226
220
223
222
221
213
224
211
100
211
101
224
102
210
212

Fig. 2

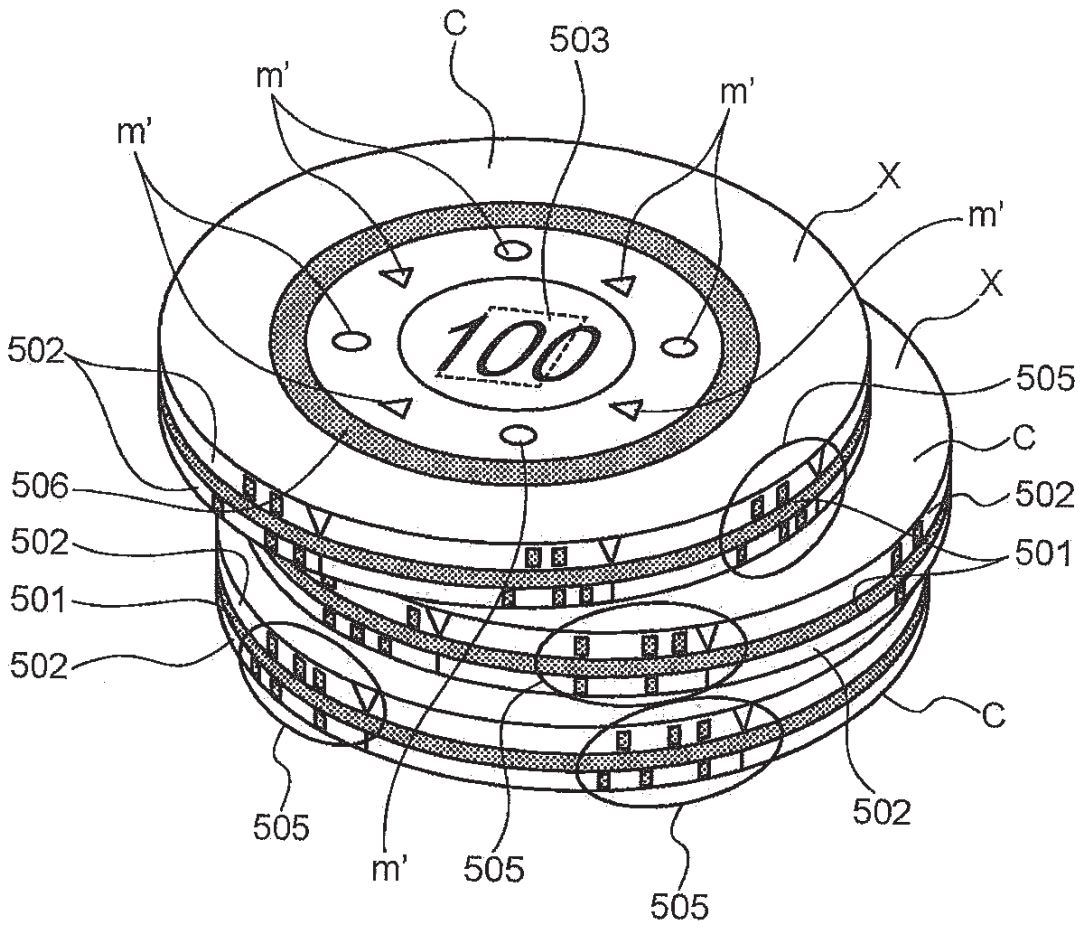
C
503
m'
m'
m'
X
m'
X
100
502
505
C
506
502
502
501
501
502
C
505
m'
505
505
502

Fig. 3

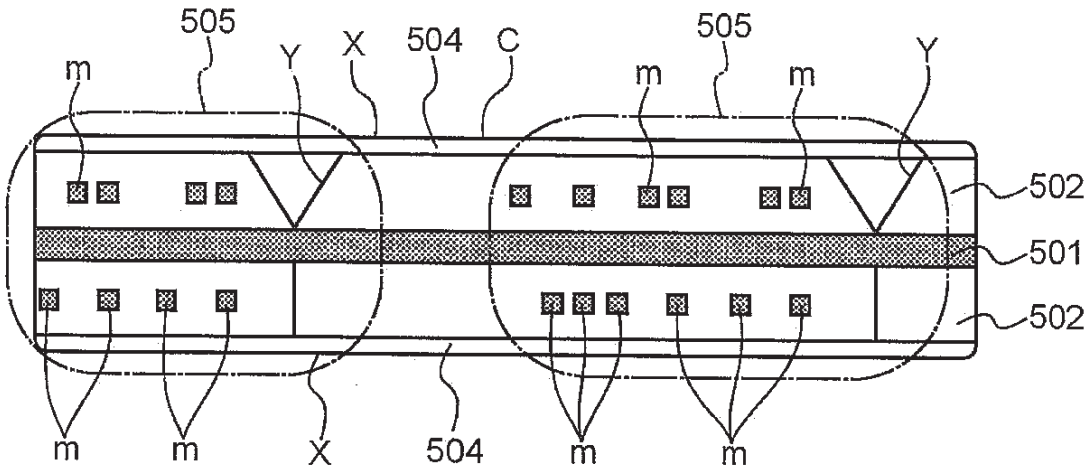

Fig. 4

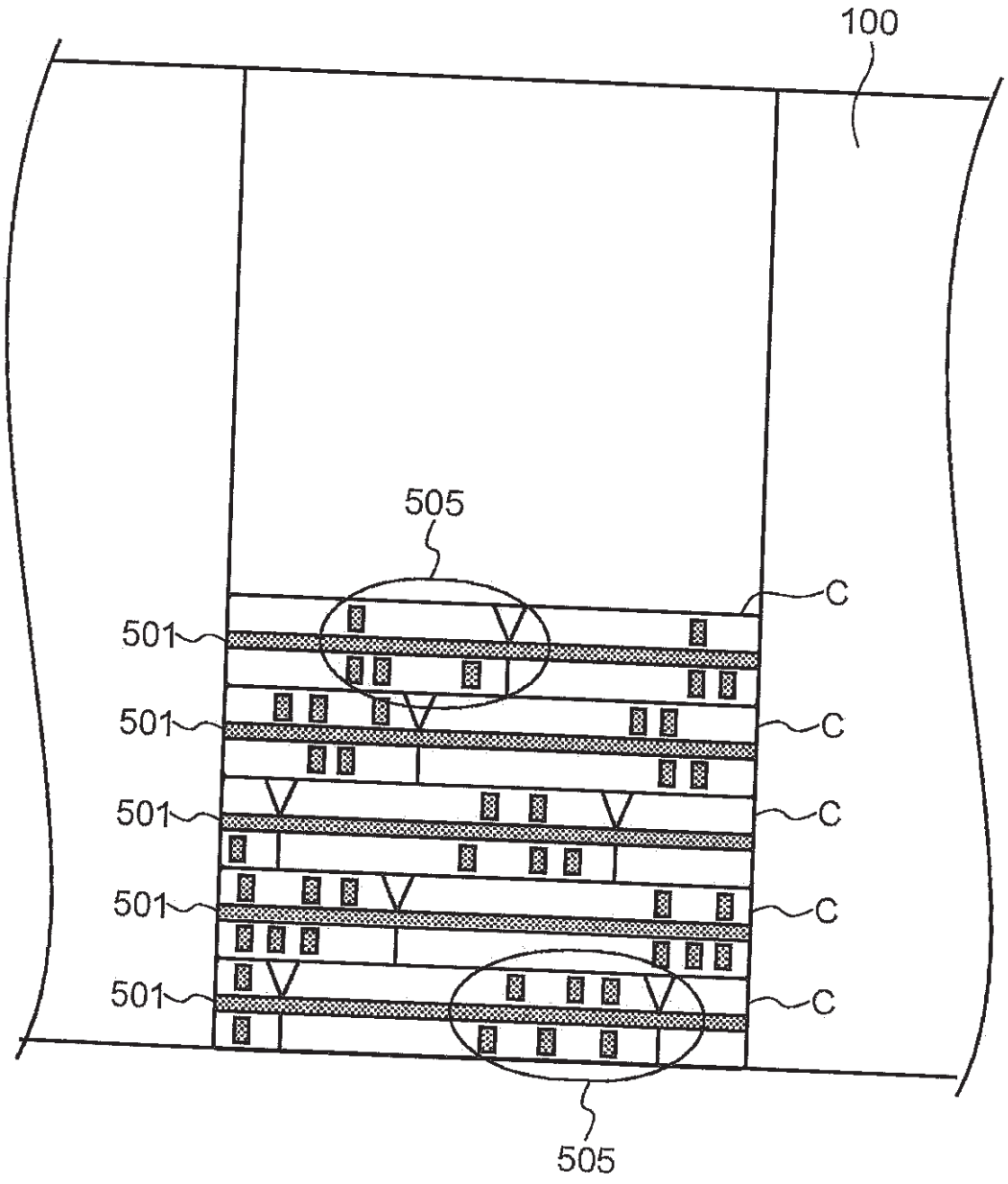

Fig. 5

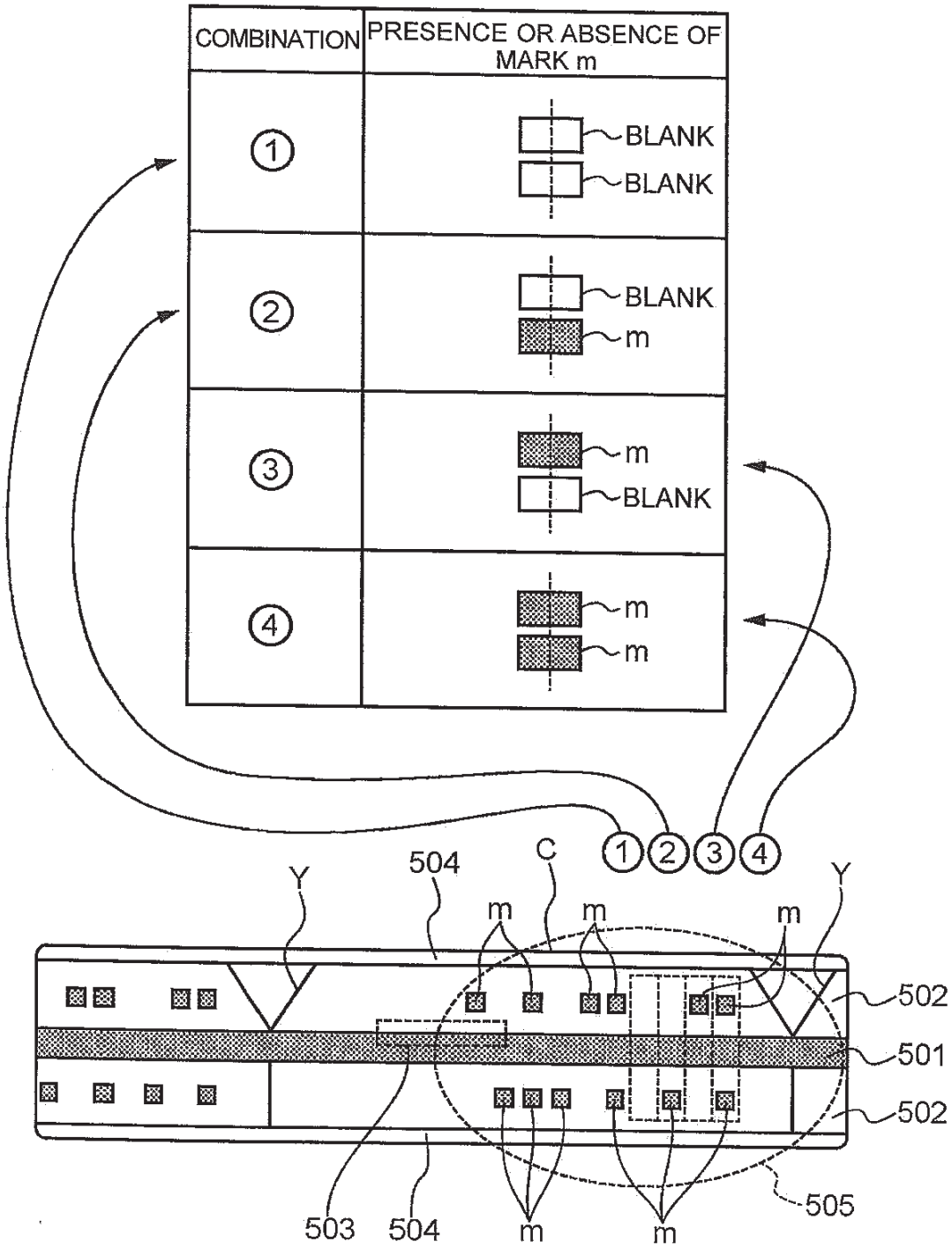
COMBINATION
PRESENCE OR ABSENCE OF MARK m
①
BLANK
BLANK
②
BLANK
m
③
m
BLANK
④
m
m
1 2 3 4
Y
504
C
m
m
m
Y
502
501
502
503
504
m
m
505

Fig. 6

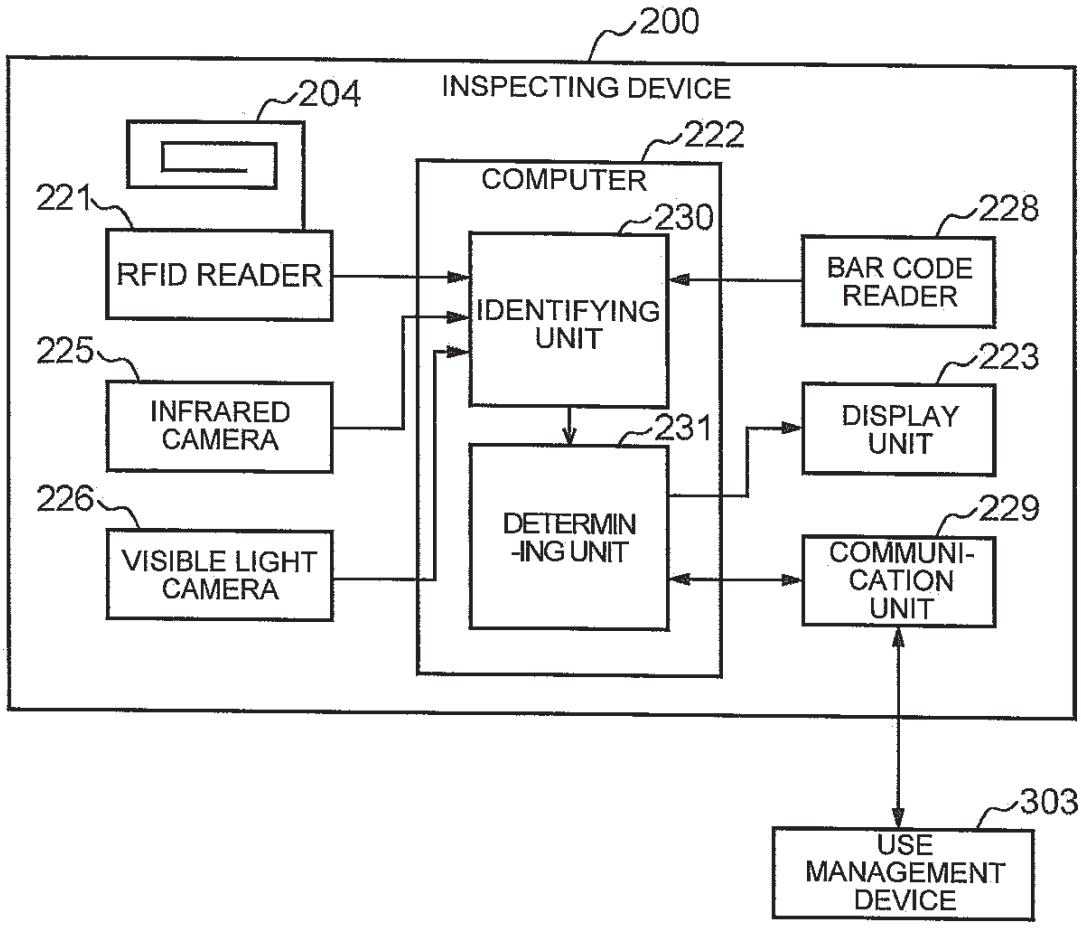
200
INSPECTING DEVICE
204
222
COMPUTER
221
RFID READER
230
IDENTIFYING UNIT
228
BAR CODE READER
225
INFRARED CAMERA
231
223
DISPLAY UNIT
226
VISIBLE LIGHT CAMERA
DETERMIN -ING UNIT
229
COMMUNI- CATION UNIT
303
USE MANAGEMENT DEVICE

Fig. 7

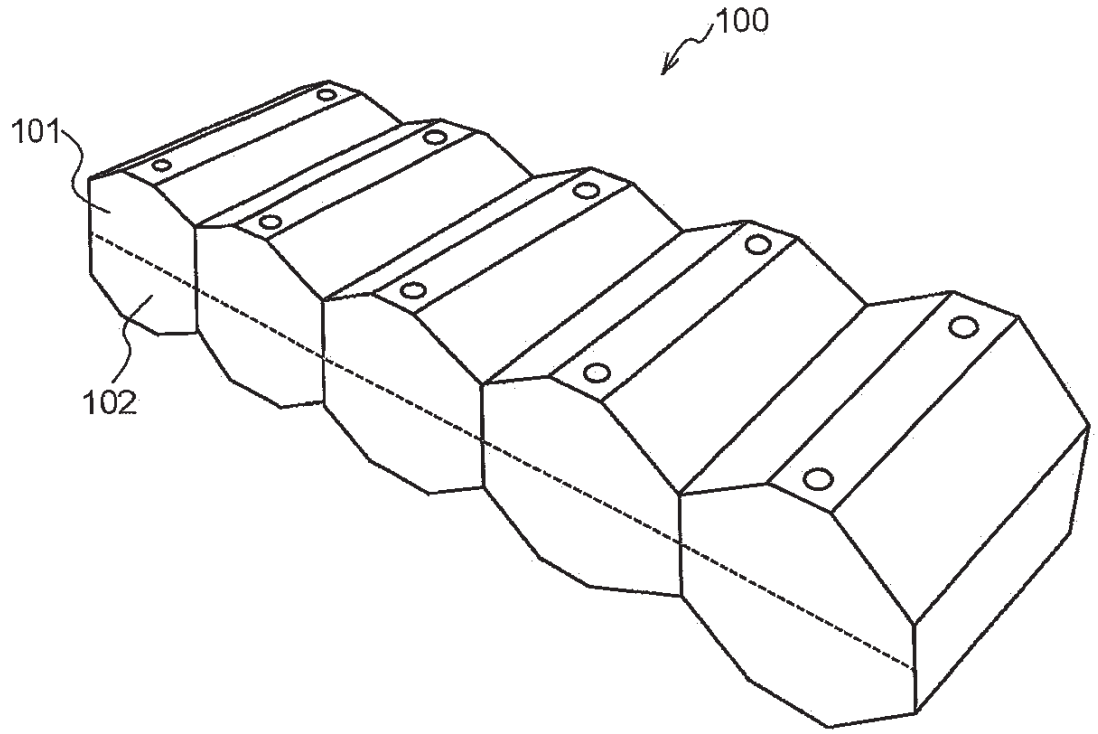

Fig. 8

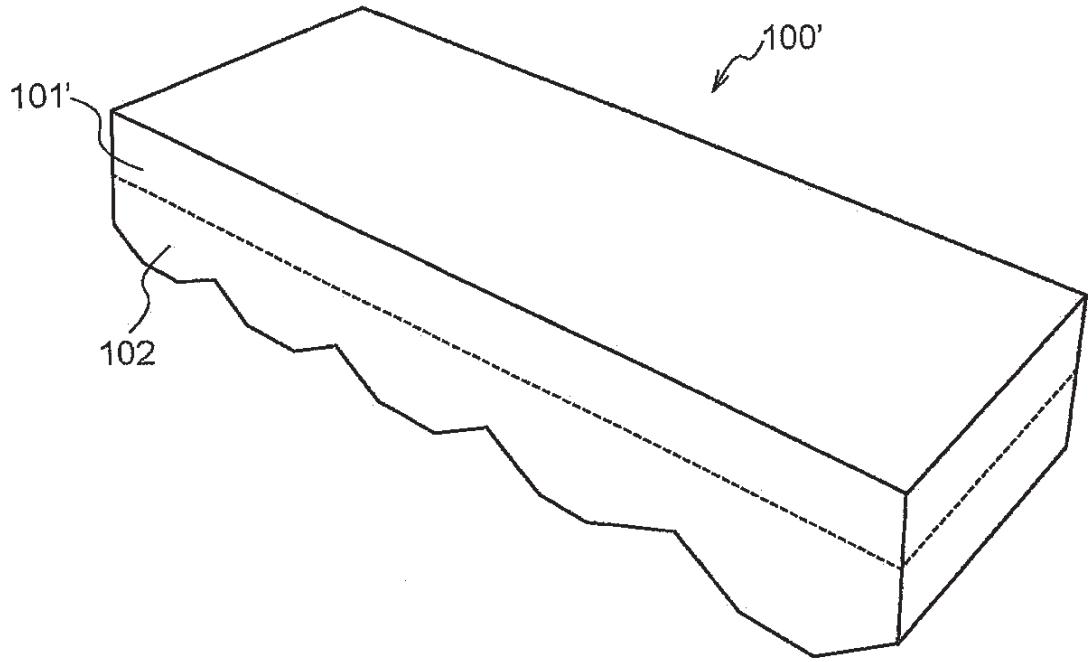

Fig. 9

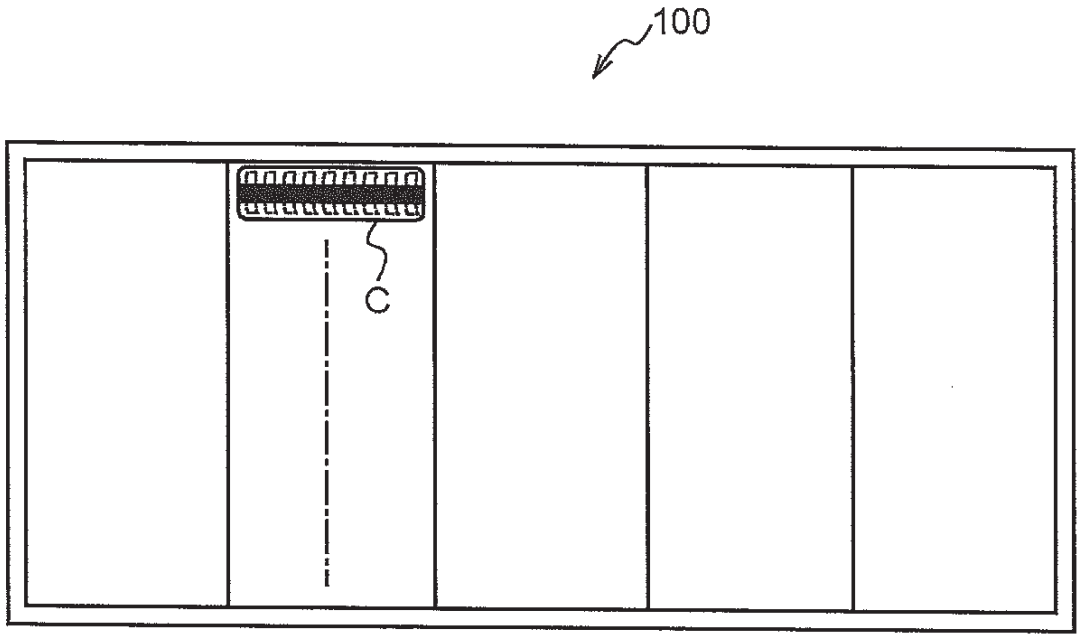

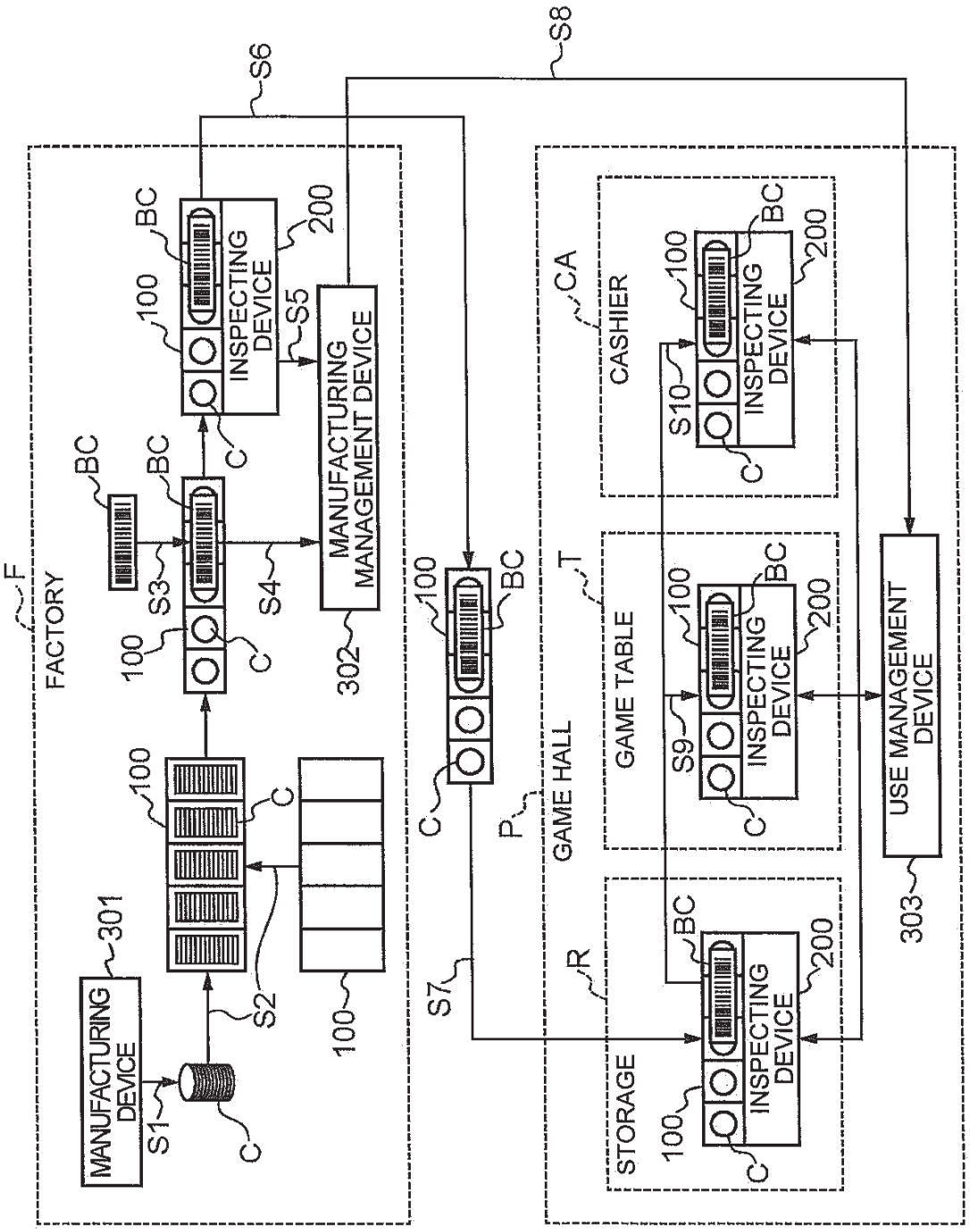
F
FACTORY
MANUFACTURING DEVICE
301
S1
S2
S3
S4
S5
S6
S7
S8
100
200
BC
C
INSPECTING DEVICE
MANUFACTURING MANAGEMENT DEVICE
302
P
GAME HALL
R
STORAGE
T
GAME TABLE
CA
CASHIER
S9
S10
USE MANAGEMENT DEVICE
303

Fig. 10

Fig. 11

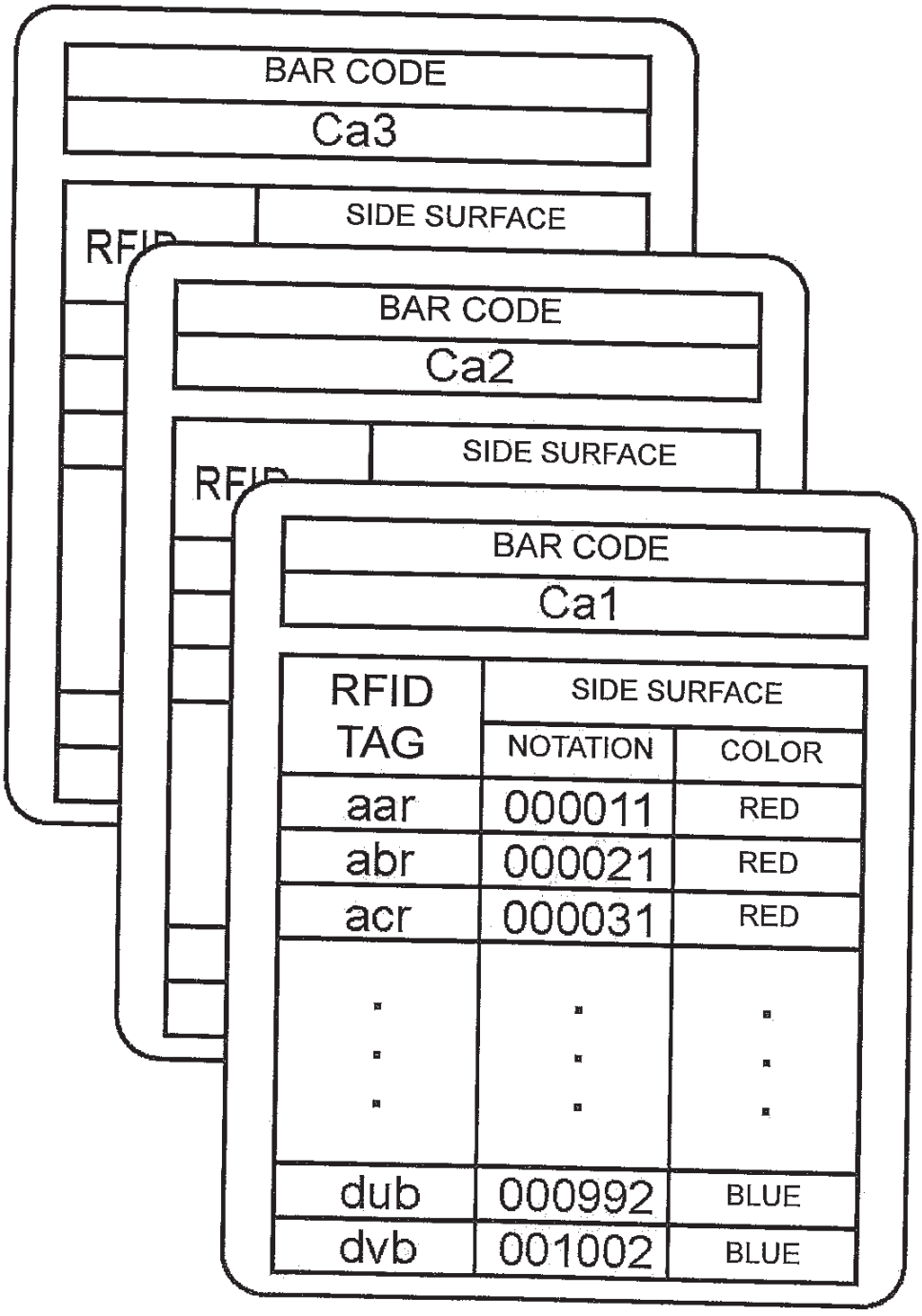


| RFID TAG | SIDE SURFACE | |
|---|---|---|
| | NOTATION | COLOR |
| aar | 000011 | RED |
| abr | 000021 | RED |
| acr | 000031 | RED |
| ⋮ | ⋮ | ⋮ |
| dub | 000992 | BLUE |
| dvb | 001002 | BLUE |

Fig. 12

| BAR CODE READER |
| --- |
| Ca1 |

| RFID READER |
| --- |
| bwg |
| dkg |
| amr |
| . |
| . |
| . |
| bbr |
| cjb |

| INFRARED CAMERA |
| --- |
| 000011 |
| 000021 |
| 000031 |
| . |
| . |
| . |
| 000992 |
| 001002 |

| VISIBLE LIGHT CAMERA |
| --- |
| RED |
| RED |
| RED |
| . |
| . |
| . |
| BLUE |
| BLUE |

Fig. 13

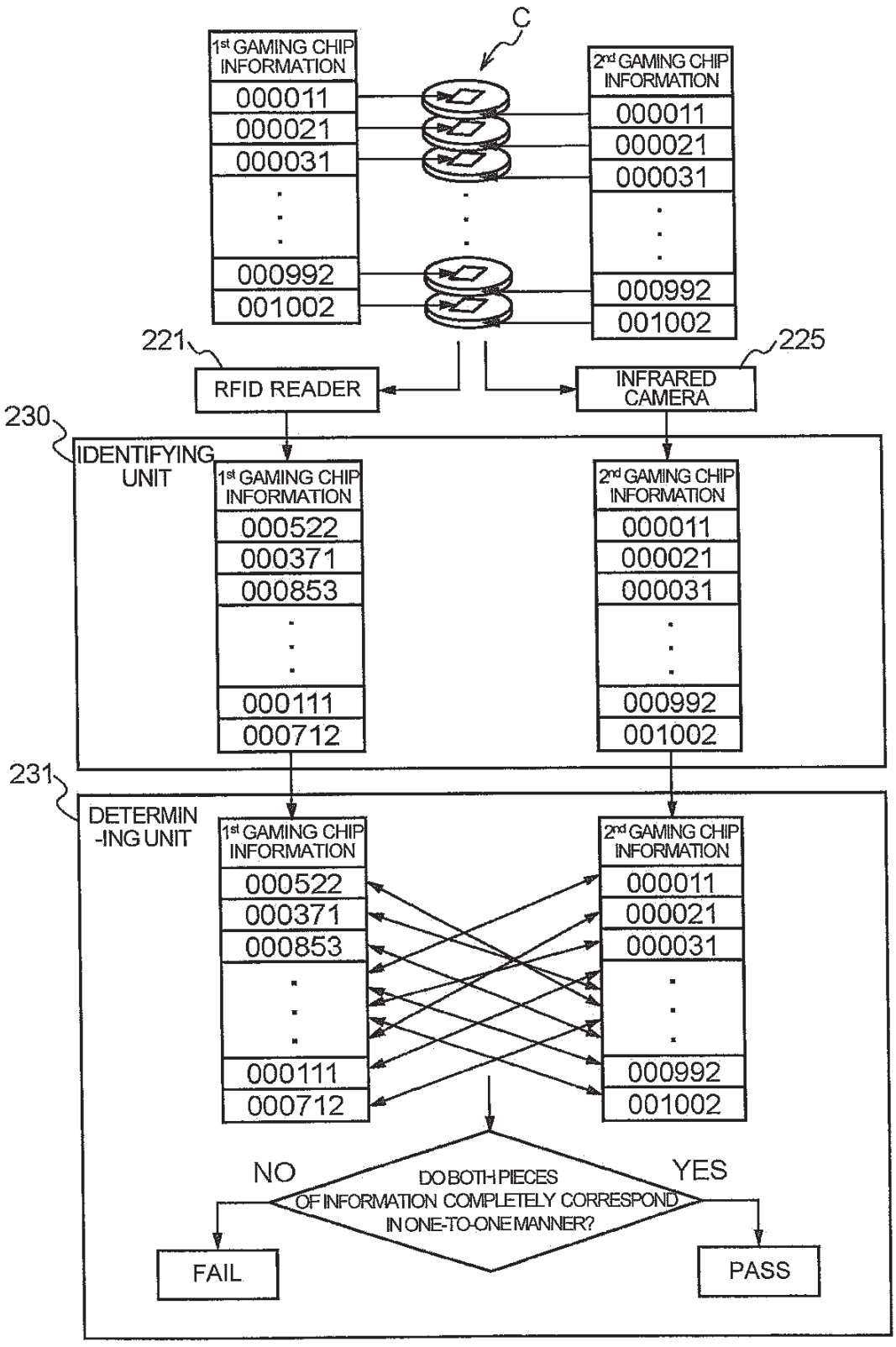
C
1st GAMING CHIP INFORMATION
000011
000021
000031
000992
001002
2nd GAMING CHIP INFORMATION
000011
000021
000031
000992
001002
221
RFID READER
225
INFRARED CAMERA
230
IDENTIFYING UNIT
1st GAMING CHIP INFORMATION
000522
000371
000853
000111
000712
2nd GAMING CHIP INFORMATION
000011
000021
000031
000992
001002
231
DETERMIN -ING UNIT
1st GAMING CHIP INFORMATION
000522
000371
000853
000111
000712
2nd GAMING CHIP INFORMATION
000011
000021
000031
000992
001002
NO
DO BOTH PIECES OF INFORMATION COMPLETELY CORRESPOND IN ONE-TO-ONE MANNER?
YES
FAIL
PASS

Fig. 14

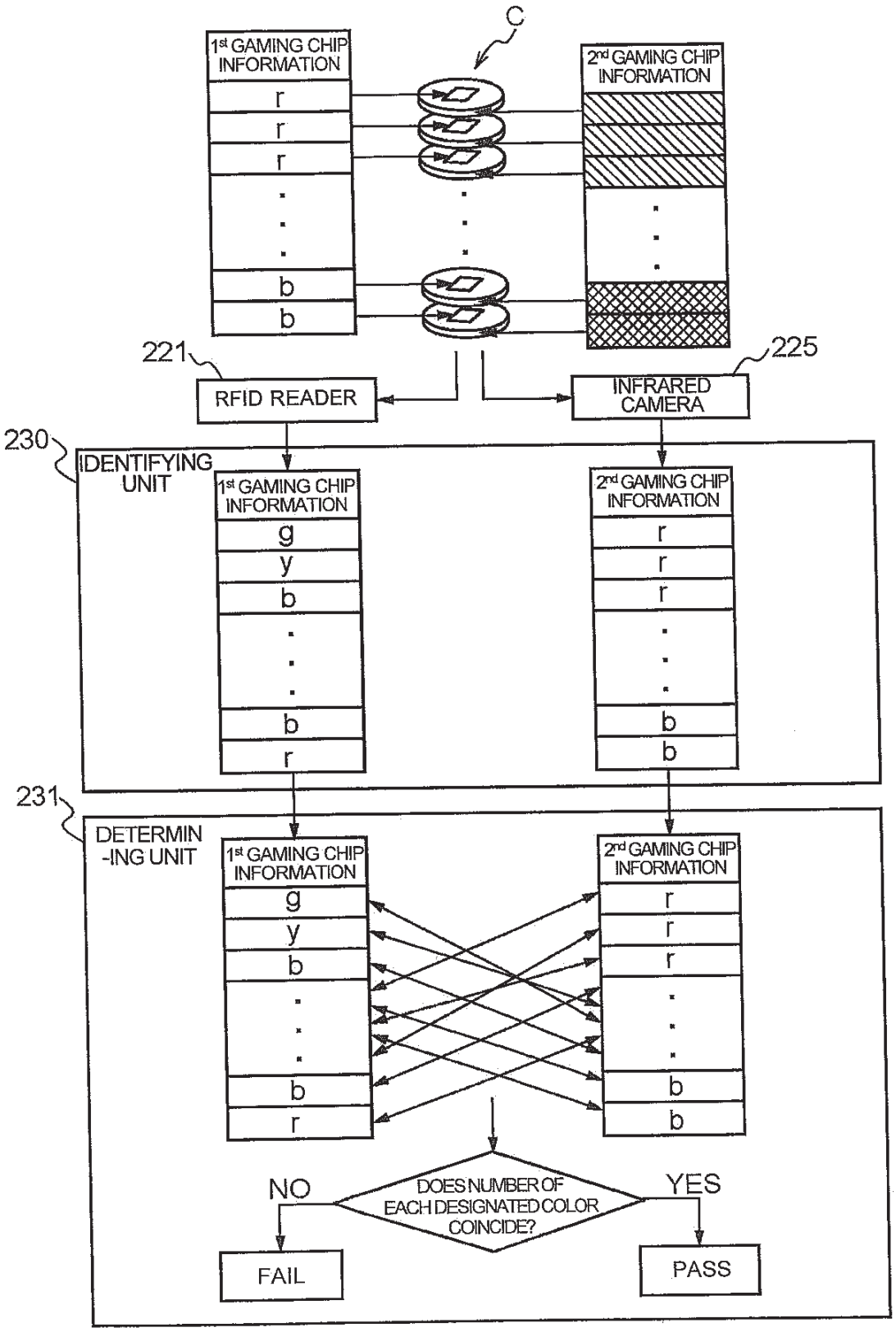
C
1st GAMING CHIP INFORMATION
r
r
r
b
b
2nd GAMING CHIP INFORMATION
221
RFID READER
225
INFRARED CAMERA
230
IDENTIFYING UNIT
1st GAMING CHIP INFORMATION
g
y
b
b
r
2nd GAMING CHIP INFORMATION
r
r
r
b
b
231
DETERMIN -ING UNIT
1st GAMING CHIP INFORMATION
g
y
b
b
r
2nd GAMING CHIP INFORMATION
r
r
r
b
b
NO
DOES NUMBER OF EACH DESIGNATED COLOR COINCIDE?
YES
FAIL
PASS

Fig. 15

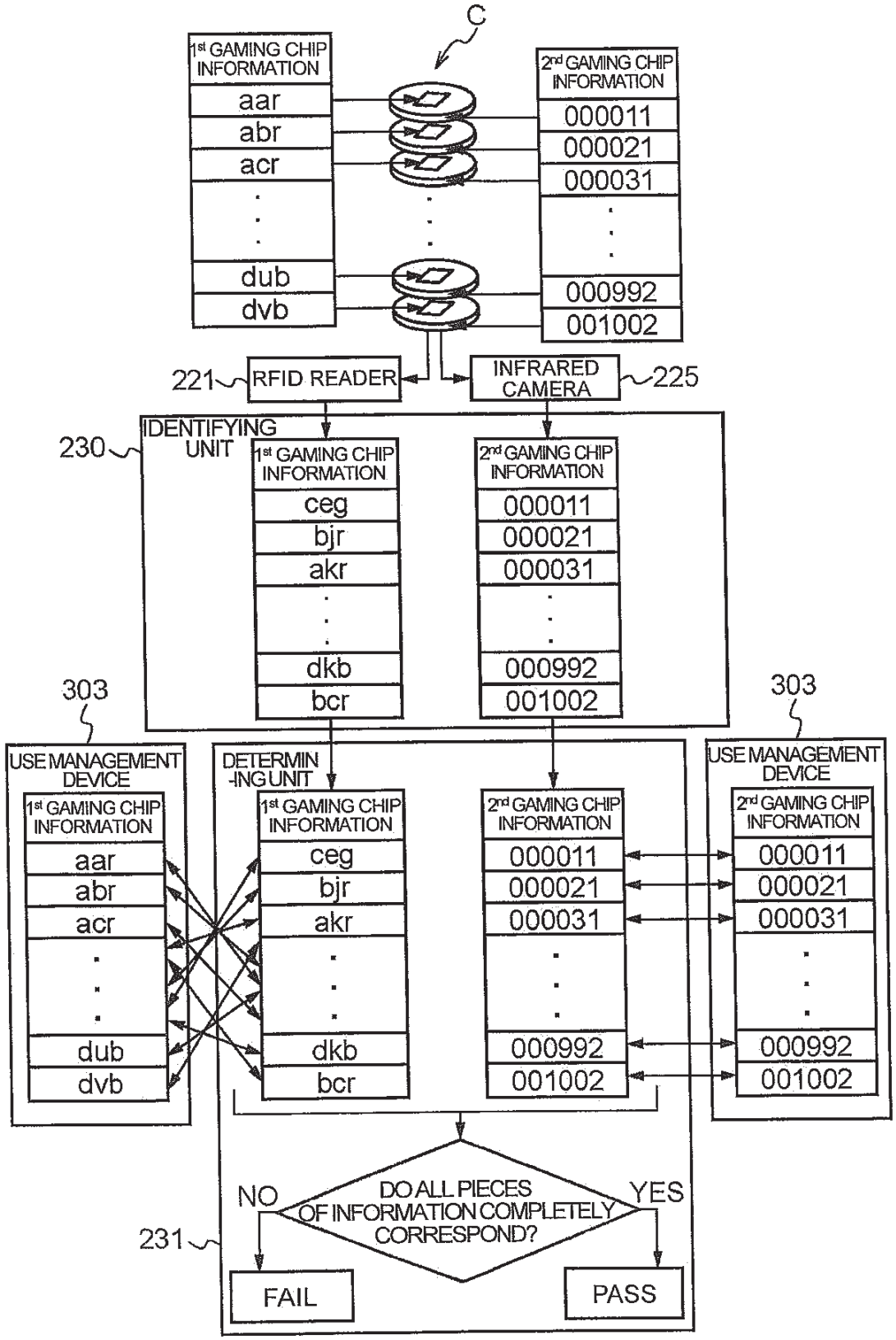
C
1st GAMING CHIP INFORMATION
aar
abr
acr
dub
dvb
2nd GAMING CHIP INFORMATION
000011
000021
000031
000992
001002
221
RFID READER
INFRARED CAMERA
225
230
IDENTIFYING UNIT
1st GAMING CHIP INFORMATION
ceg
bjr
akr
dkb
bcr
2nd GAMING CHIP INFORMATION
000011
000021
000031
000992
001002
303
303
USE MANAGEMENT DEVICE
1st GAMING CHIP INFORMATION
aar
abr
acr
dub
dvb
DETERMIN -ING UNIT
1st GAMING CHIP INFORMATION
ceg
bjr
akr
dkb
bcr
2nd GAMING CHIP INFORMATION
000011
000021
000031
000992
001002
USE MANAGEMENT DEVICE
2nd GAMING CHIP INFORMATION
000011
000021
000031
000992
001002
NO
DO ALL PIECES OF INFORMATION COMPLETELY CORRESPOND?
YES
231
FAIL
PASS

Fig. 16

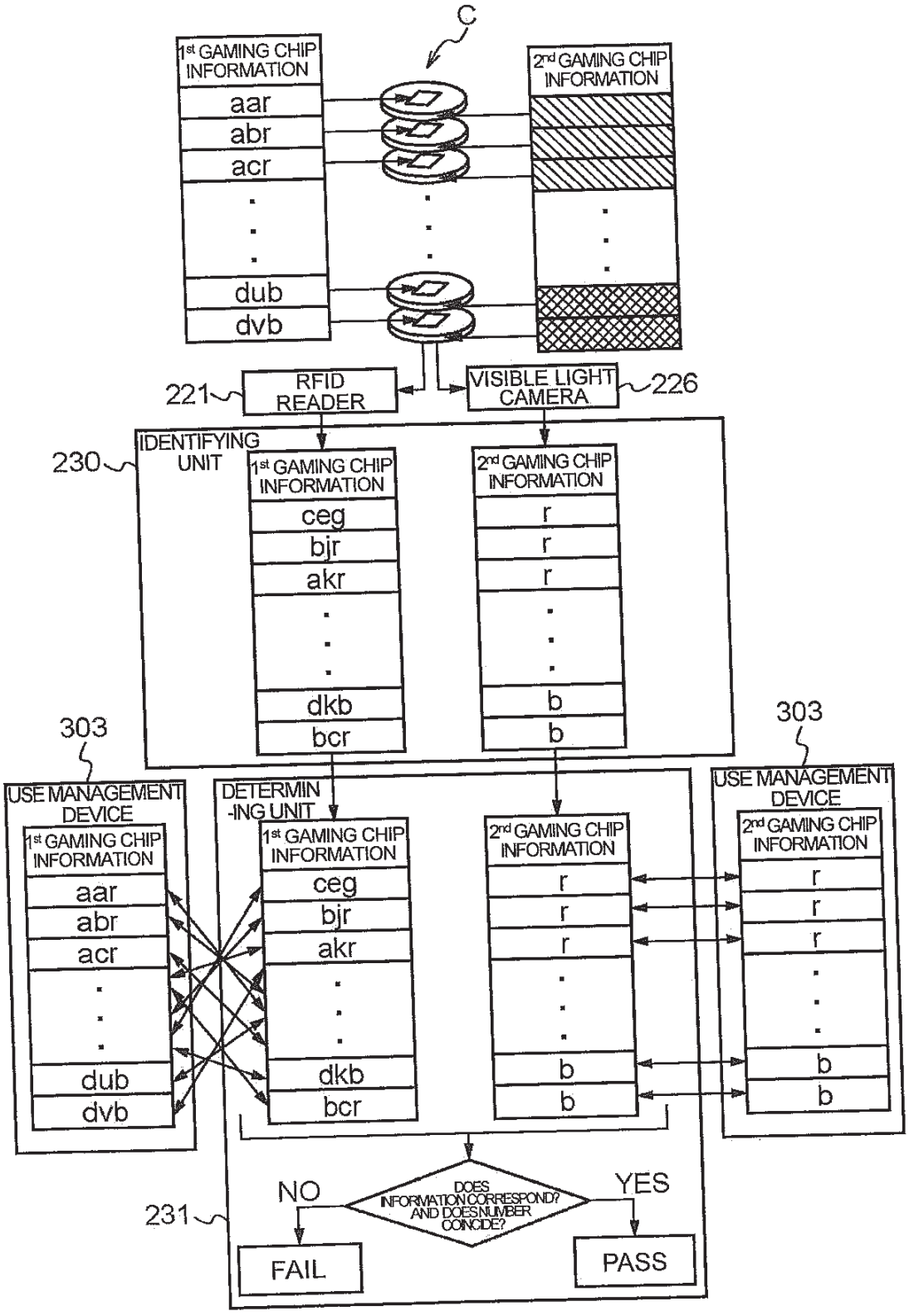
C
1st GAMING CHIP INFORMATION
aar
abr
acr
dub
dvb
2nd GAMING CHIP INFORMATION
221
RFID READER
VISIBLE LIGHT CAMERA
226
230
IDENTIFYING UNIT
1st GAMING CHIP INFORMATION
ceg
bjr
akr
dkb
bcr
2nd GAMING CHIP INFORMATION
r
r
r
b
b
303
303
USE MANAGEMENT DEVICE
1st GAMING CHIP INFORMATION
aar
abr
acr
dub
dvb
DETERMIN -ING UNIT
1st GAMING CHIP INFORMATION
ceg
bjr
akr
dkb
bcr
2nd GAMING CHIP INFORMATION
r
r
r
b
b
USE MANAGEMENT DEVICE
2nd GAMING CHIP INFORMATION
r
r
r
b
b
231
NO
DOES INFORMATION CORRESPOND? AND DOES NUMBER COINCIDE?
YES
FAIL
PASS

Fig. 17

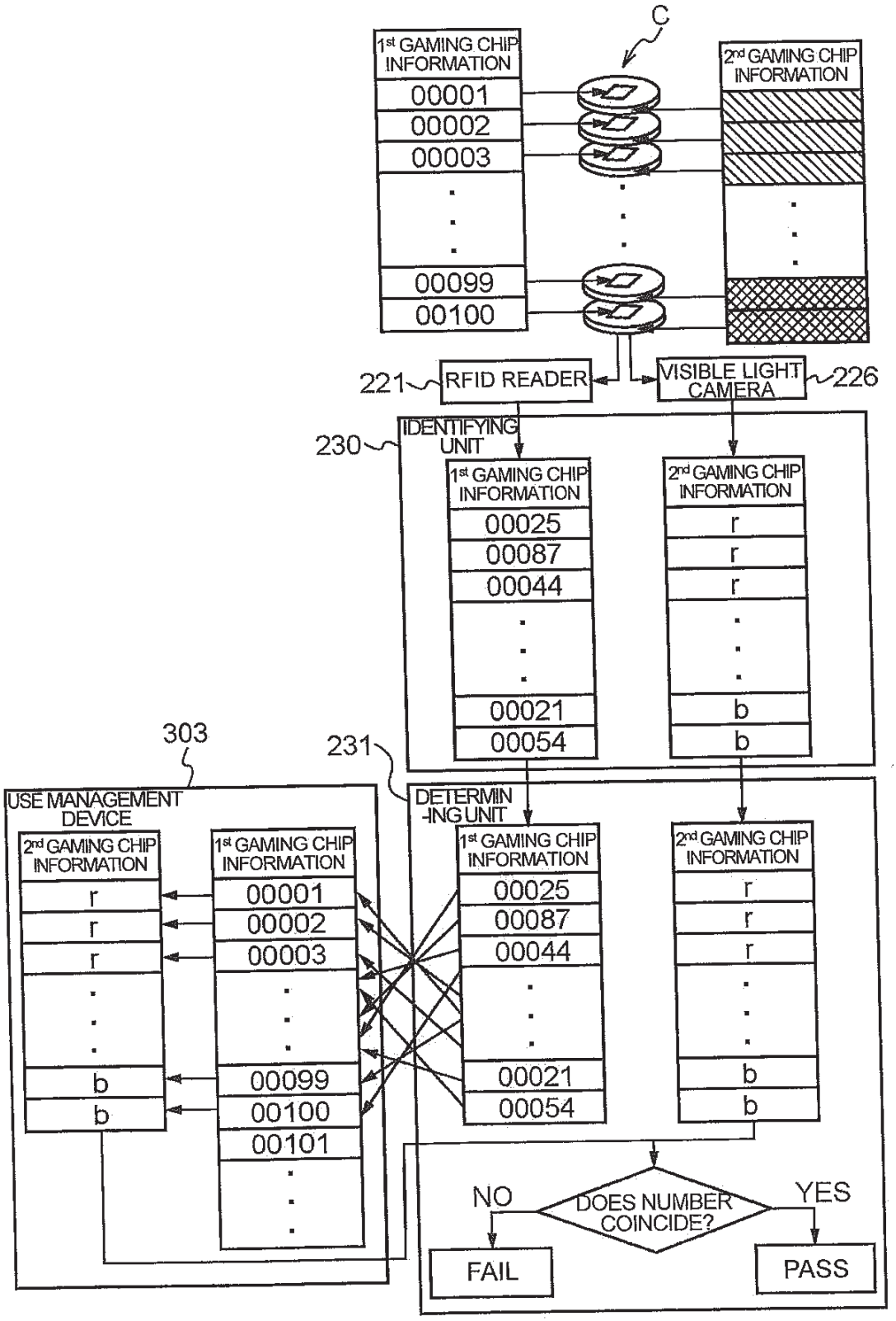
C
1st GAMING CHIP INFORMATION
00001
00002
00003
00099
00100
2nd GAMING CHIP INFORMATION
221
RFID READER
VISIBLE LIGHT CAMERA
226
230
IDENTIFYING UNIT
1st GAMING CHIP INFORMATION
00025
00087
00044
00021
00054
2nd GAMING CHIP INFORMATION
r
r
r
b
b
303
231
USE MANAGEMENT DEVICE
2nd GAMING CHIP INFORMATION
r
r
r
b
b
1st GAMING CHIP INFORMATION
00001
00002
00003
00099
00100
00101
DETERMIN -ING UNIT
1st GAMING CHIP INFORMATION
00025
00087
00044
00021
00054
2nd GAMING CHIP INFORMATION
r
r
r
b
b
NO
DOES NUMBER COINCIDE?
YES
FAIL
PASS

Fig. 18

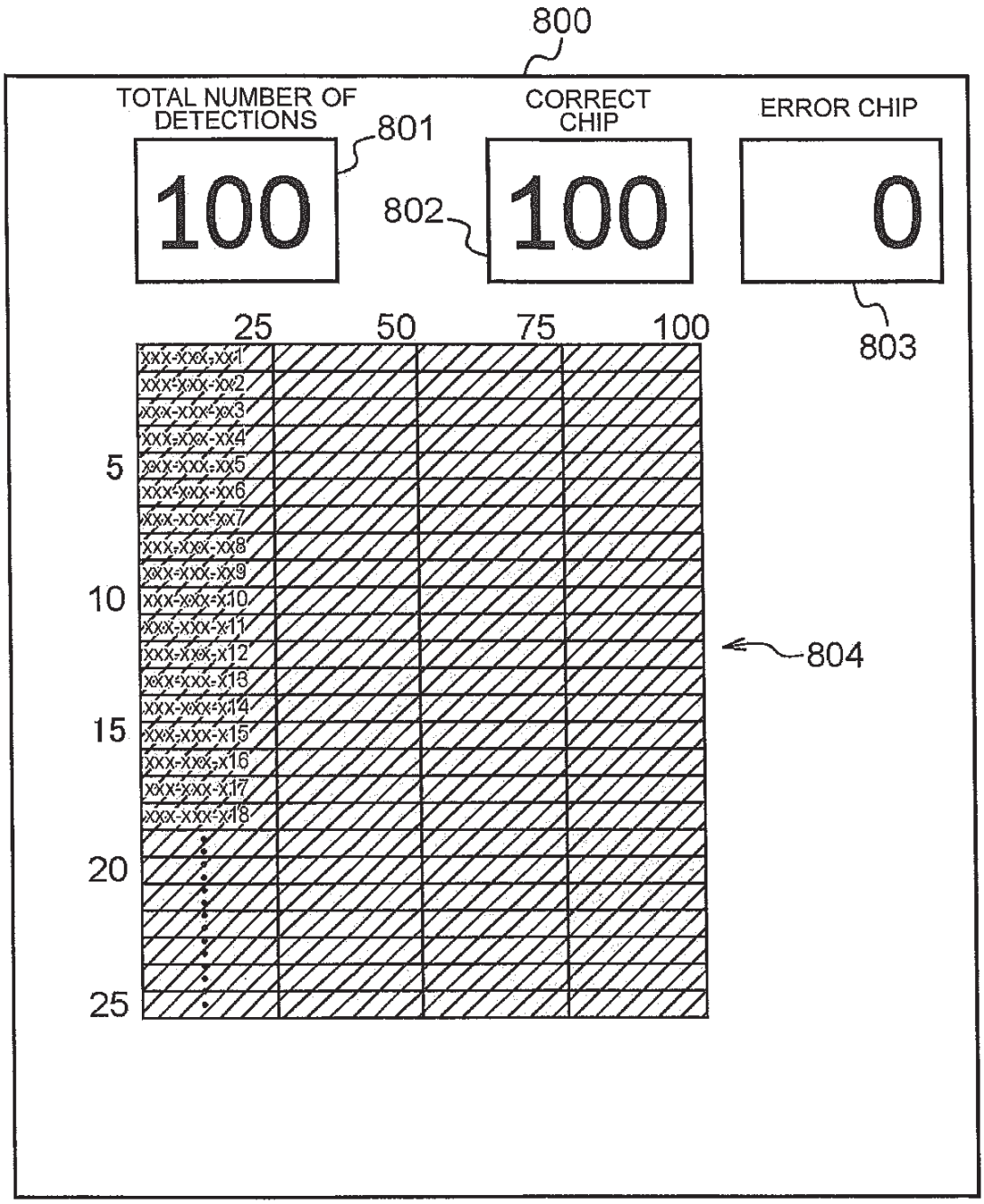
800
TOTAL NUMBER OF DETECTIONS
801
100
CORRECT CHIP
802
100
ERROR CHIP
0
803
25
50
75
100
5
10
15
20
25
804

Fig. 19

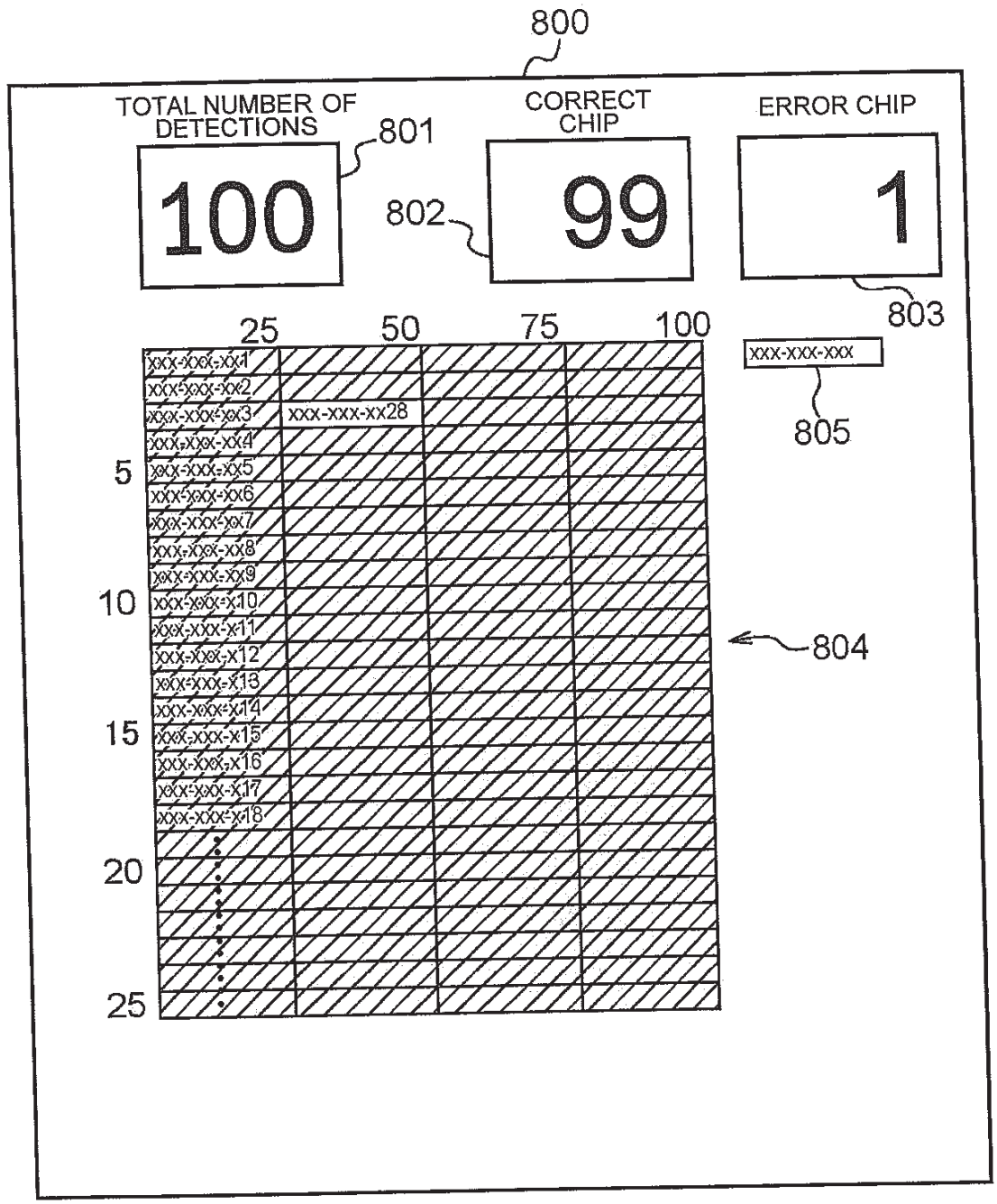
800
TOTAL NUMBER OF DETECTIONS
801
100
CORRECT CHIP
802
99
ERROR CHIP
1
803
25
50
75
100
xxx-xxx-xx1
xxx-xxx-xx2
xxx-xxx-xx3
xxx-xxx-xx28
xxx-xxx-xx4
xxx-xxx-xx5
xxx-xxx-xx6
xxx-xxx-xx7
xxx-xxx-xx8
xxx-xxx-xx9
xxx-xxx-x10
xxx-xxx-x11
xxx-xxx-x12
xxx-xxx-x13
xxx-xxx-x14
xxx-xxx-x15
xxx-xxx-x16
xxx-xxx-x17
xxx-xxx-x18
xxx-xxx-xxx
805
804
5
10
15
20
25

Fig. 20

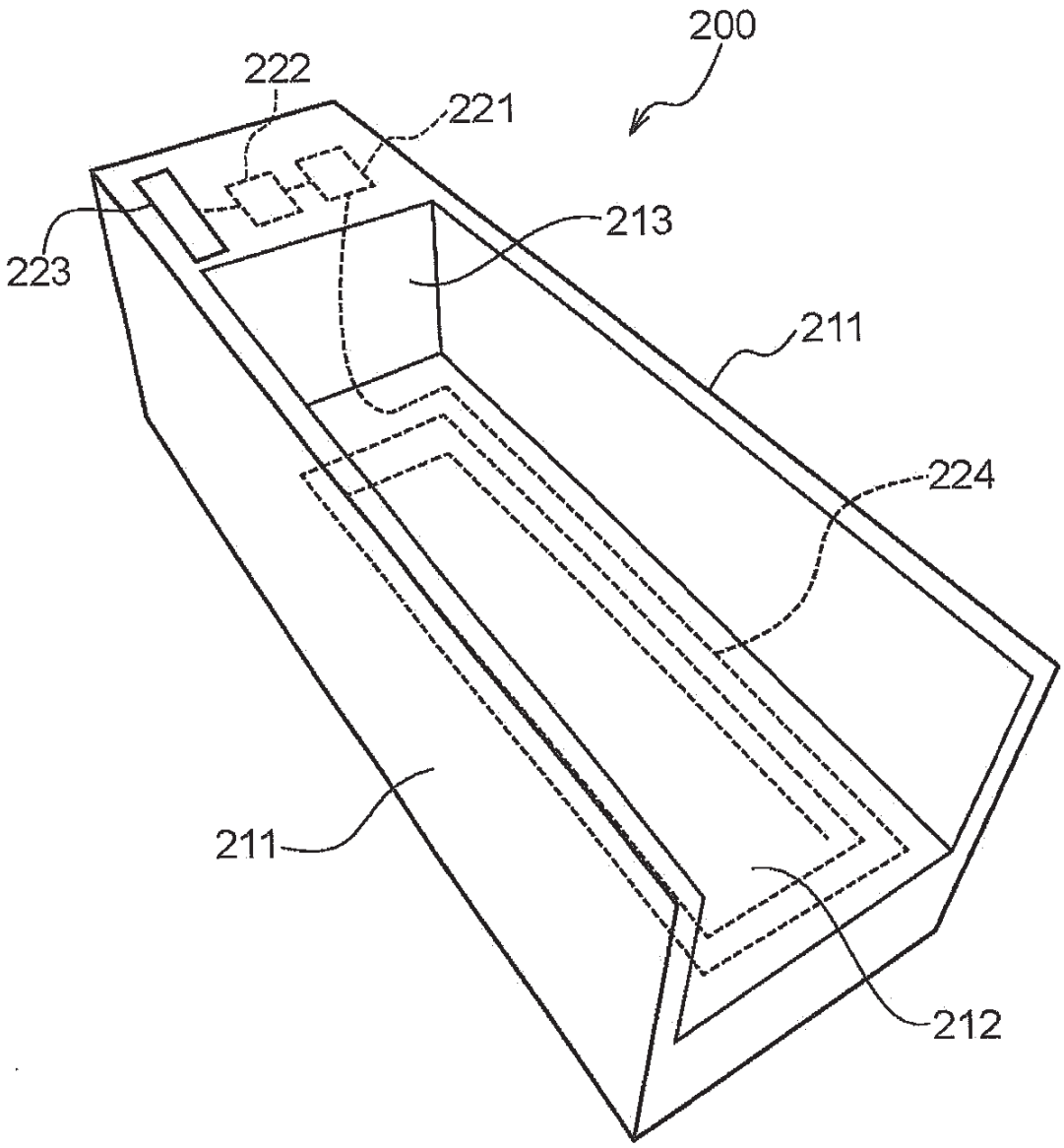

Fig. 21

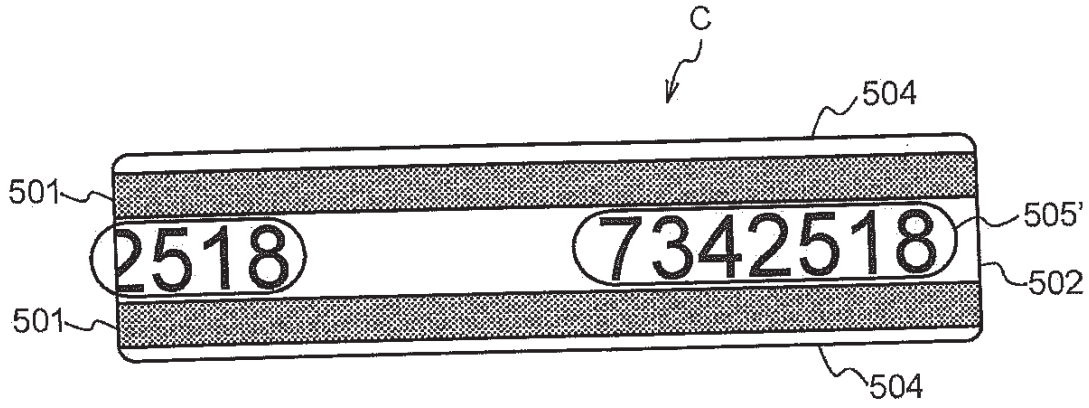

Fig. 22

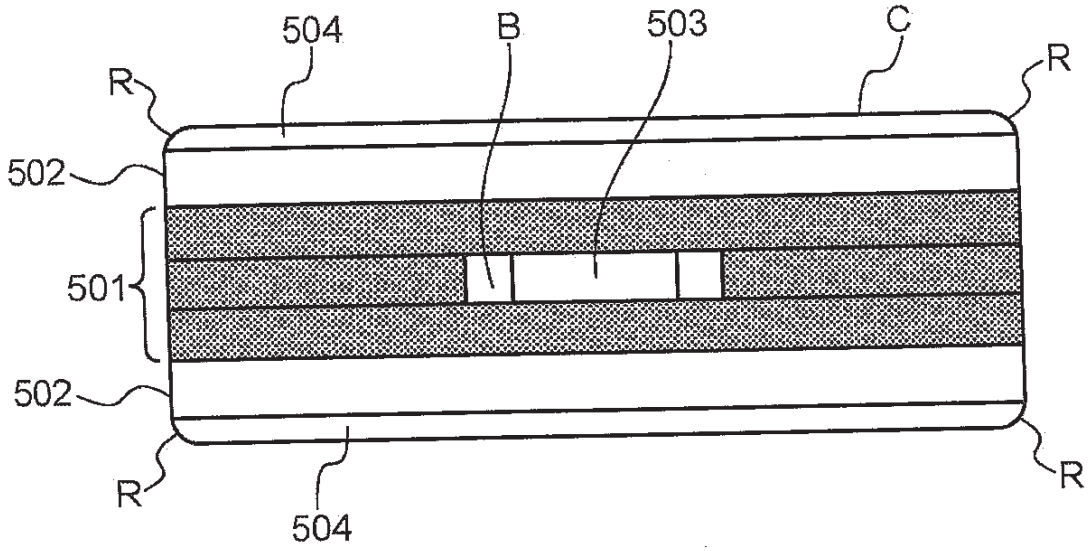

Fig. 23

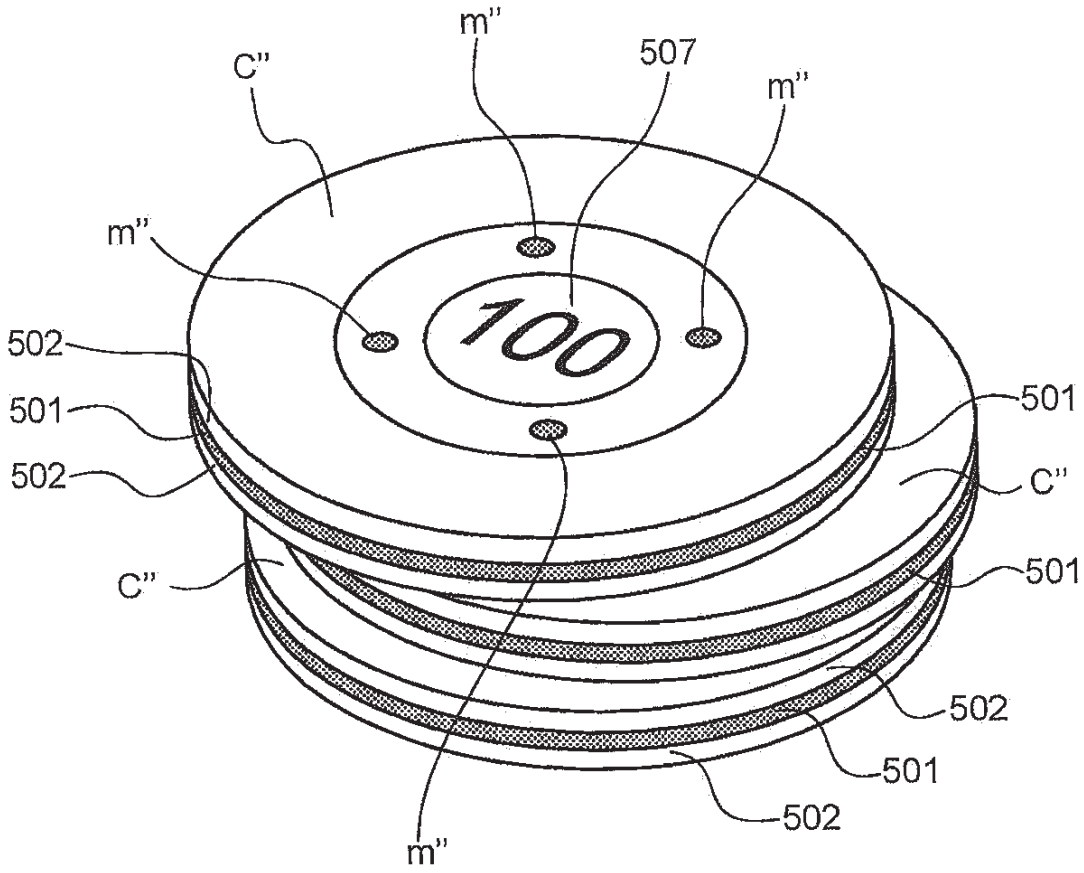

Fig. 24

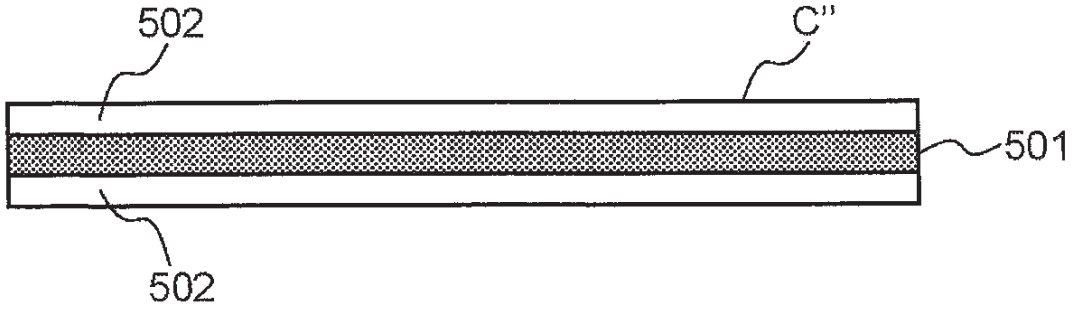

Fig. 25

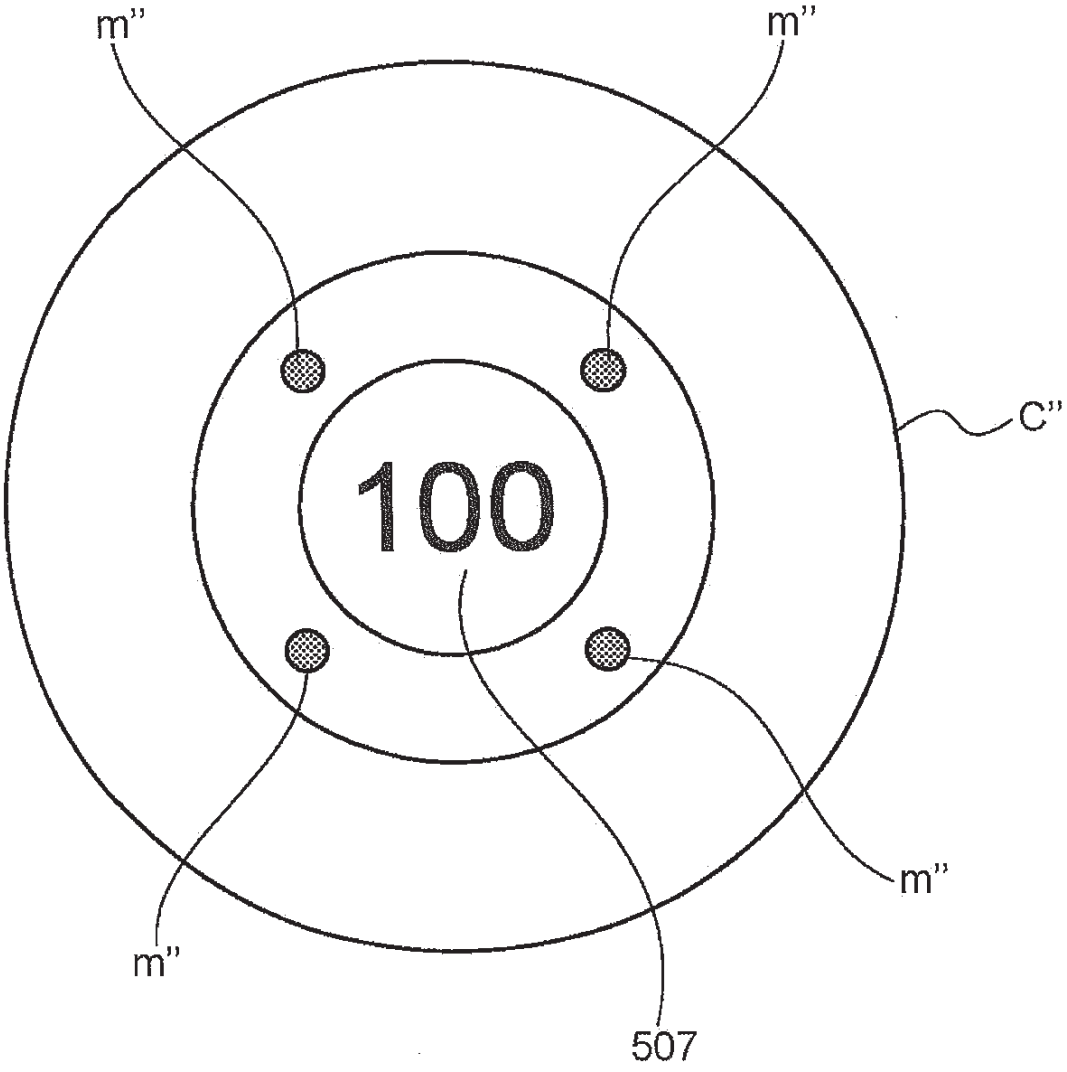

Fig. 26

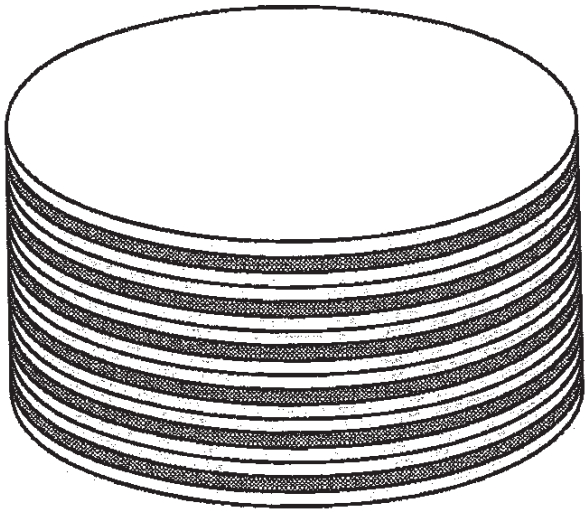

Fig. 27

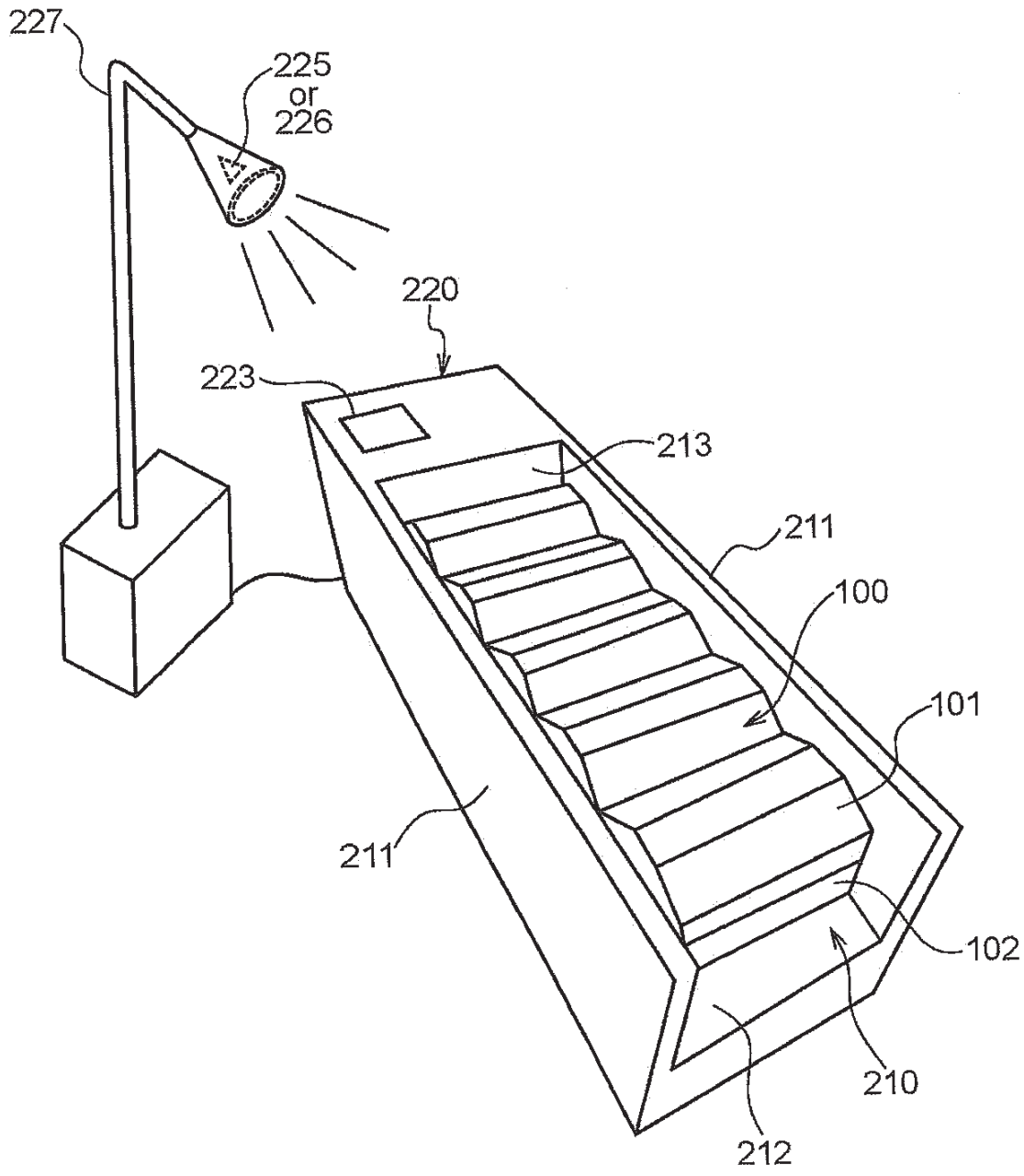

Fig. 28

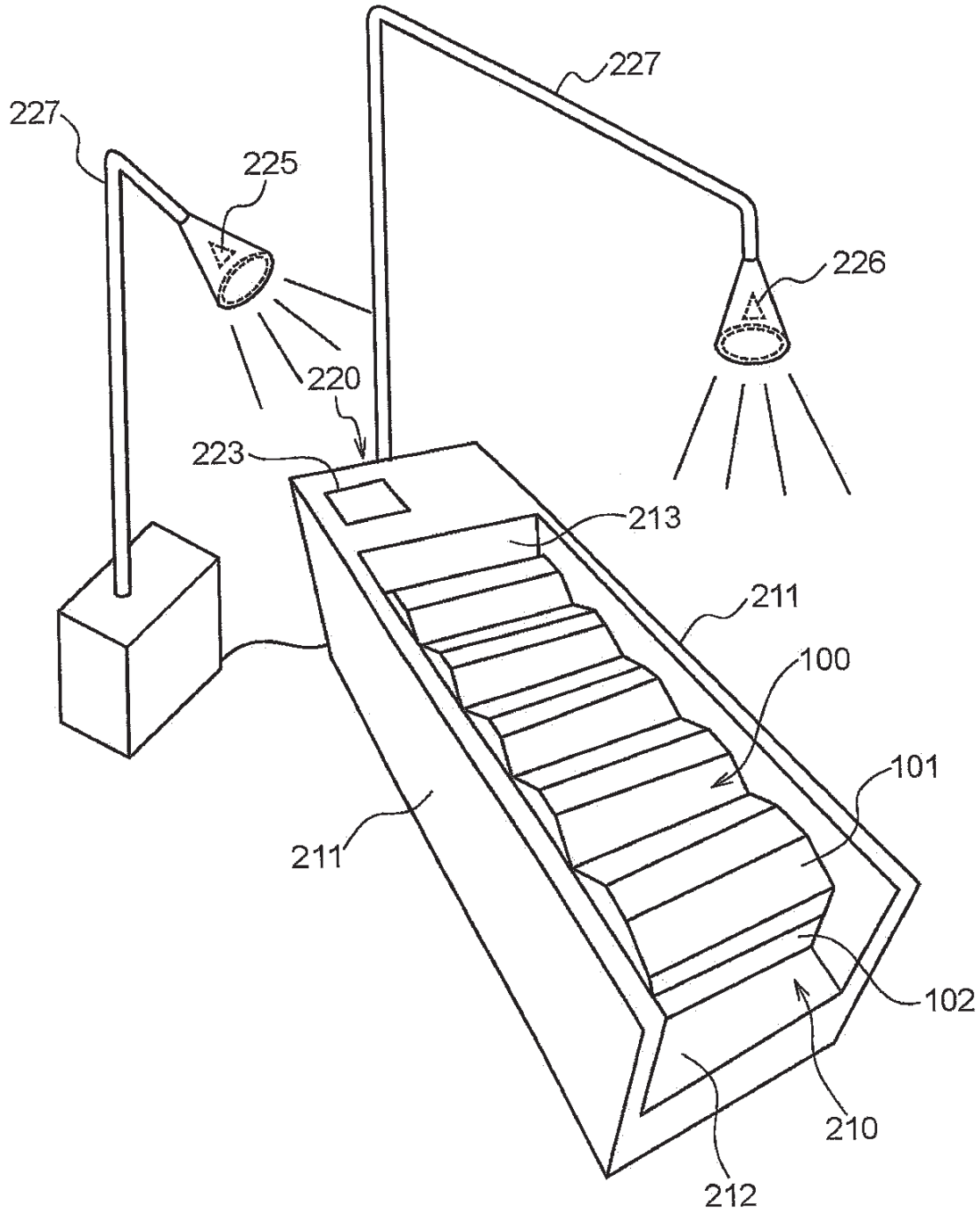

Fig. 29

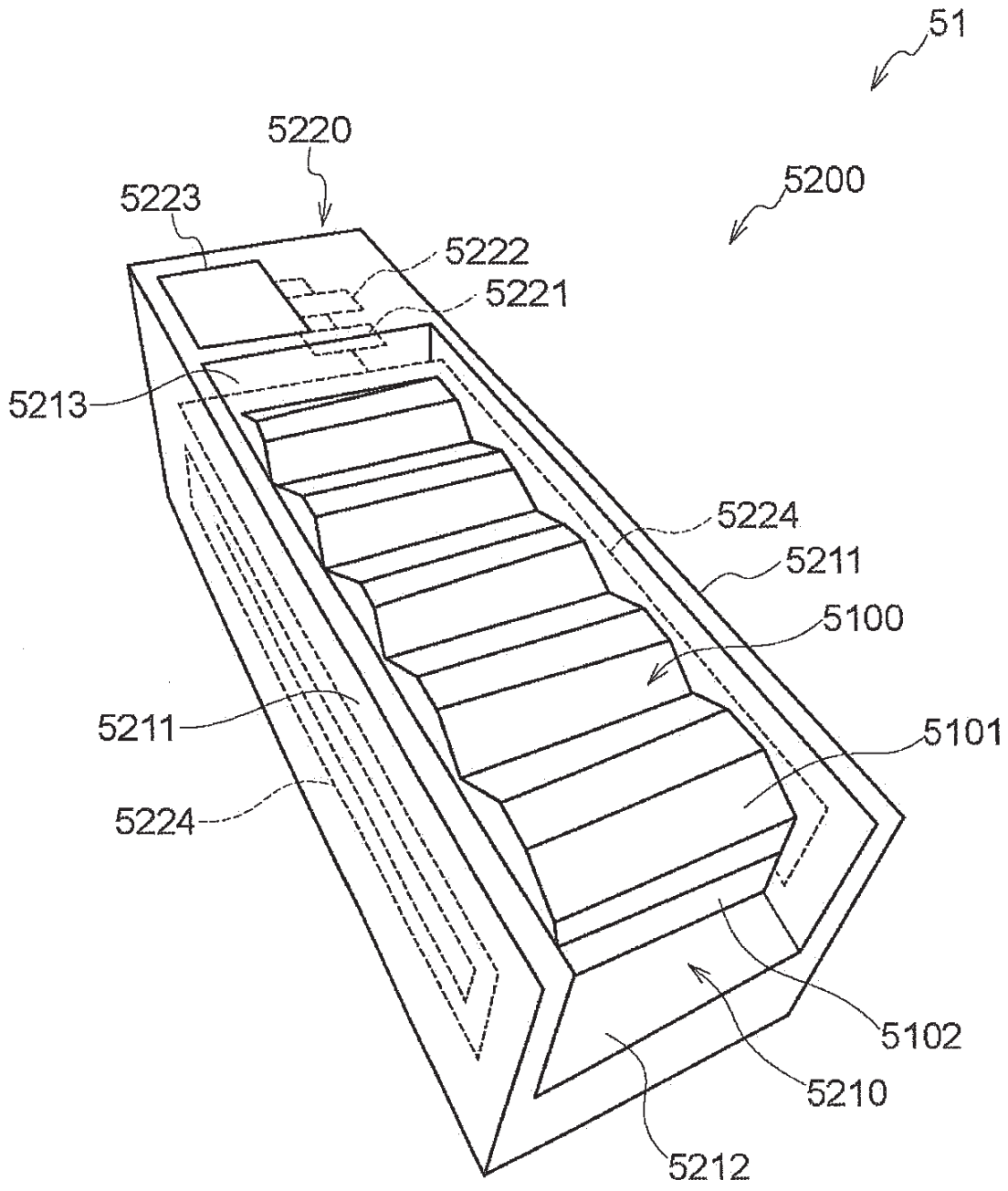
51
5220
5200
5223
5222
5221
5213
5224
5211
5100
5211
5101
5224
5102
5210
5212

Fig. 30

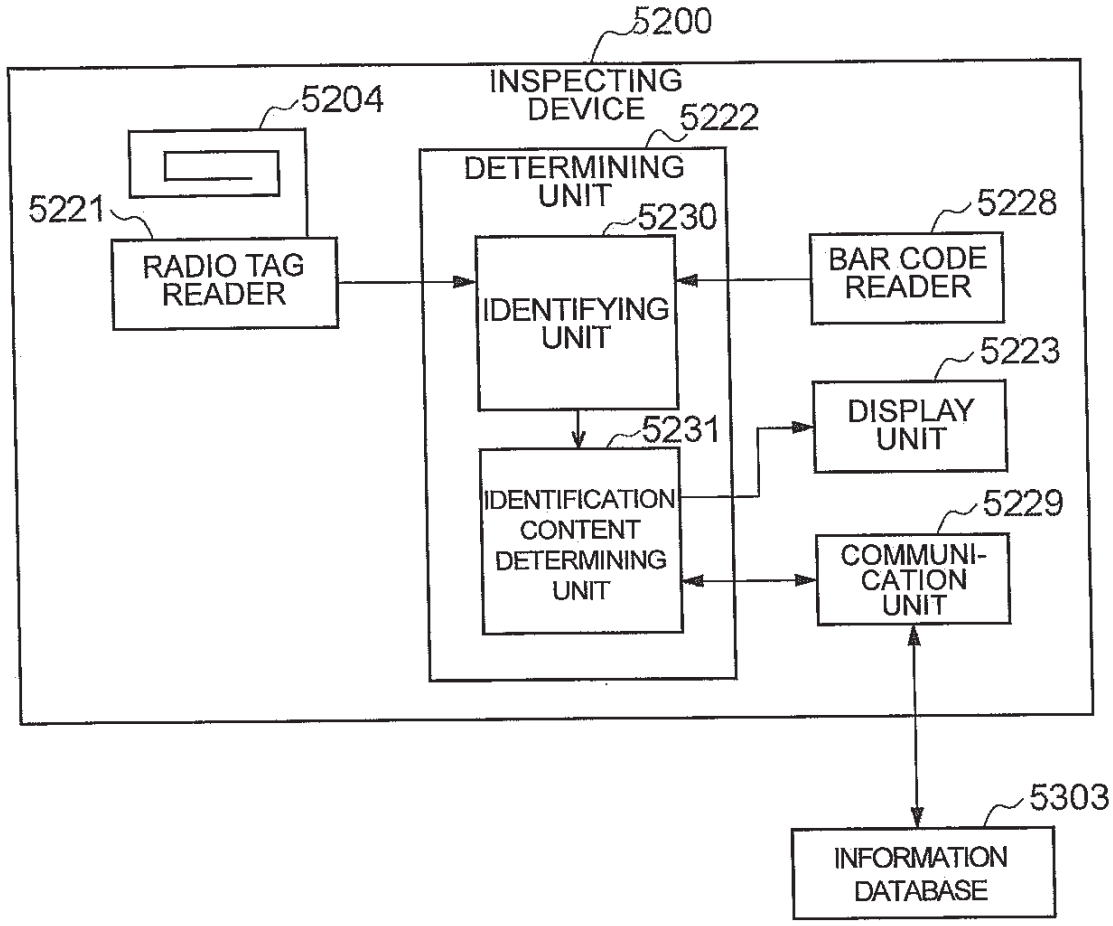
5200
INSPECTING DEVICE
5204
5222
DETERMINING UNIT
5221
5230
5228
RADIO TAG READER
IDENTIFYING UNIT
BAR CODE READER
5223
DISPLAY UNIT
5231
IDENTIFICATION CONTENT DETERMINING UNIT
5229
COMMUNI-CATION UNIT
5303
INFORMATION DATABASE

Fig. 31

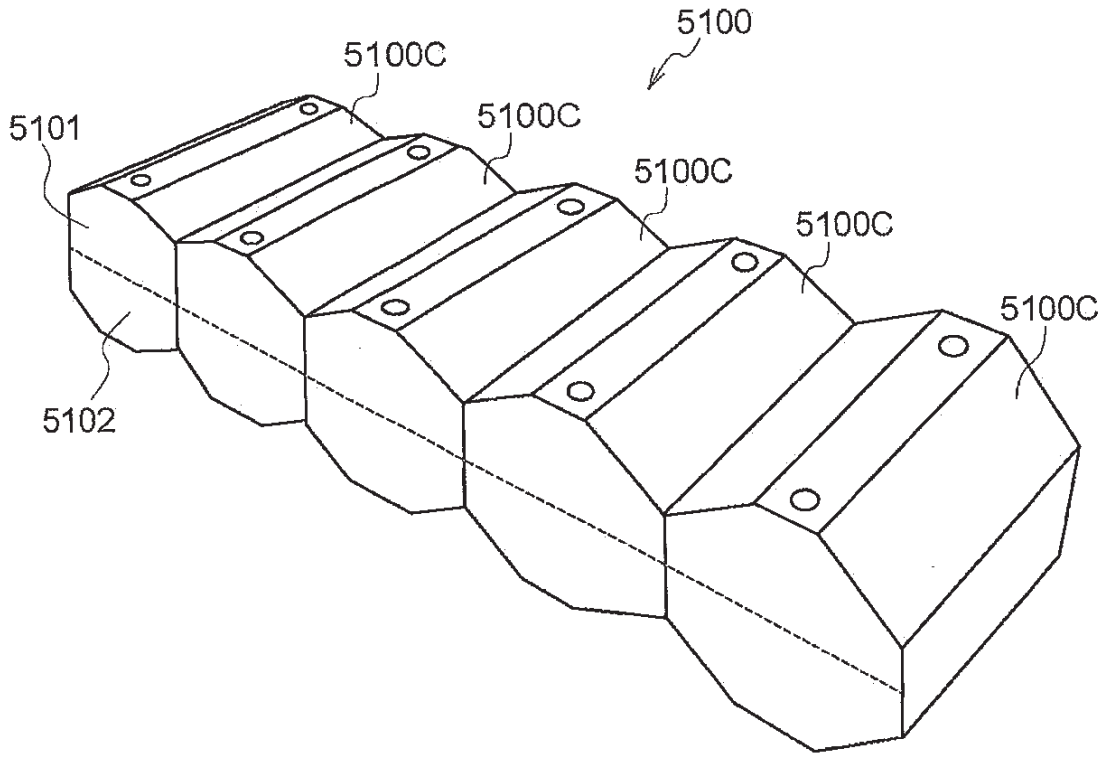

Fig. 32

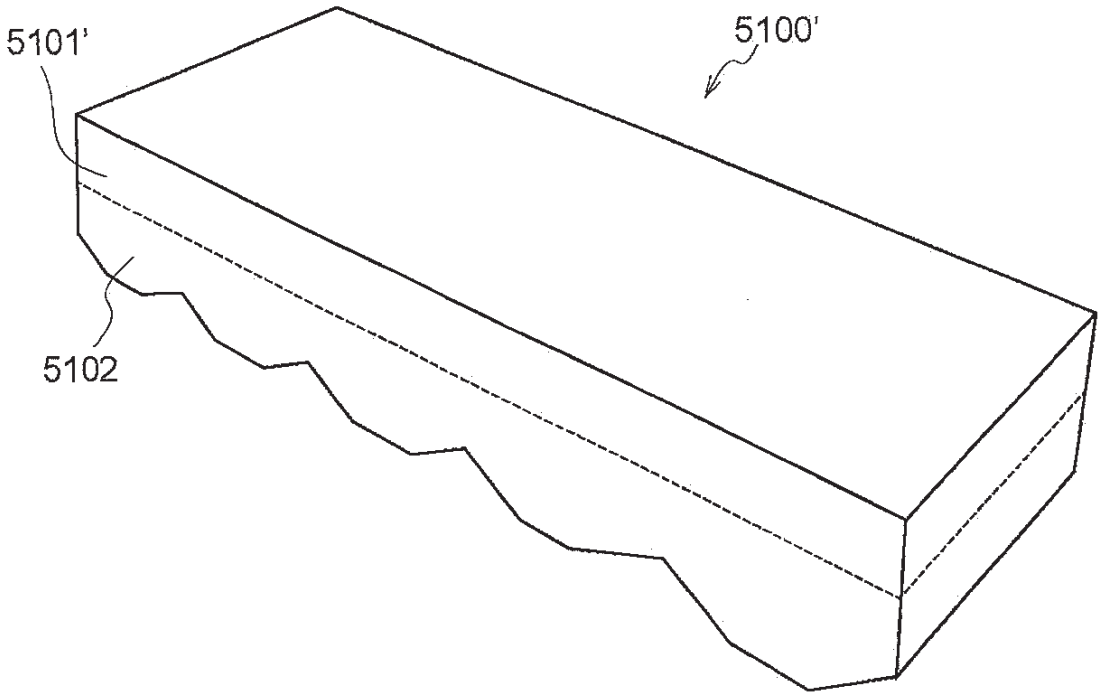

Fig. 33

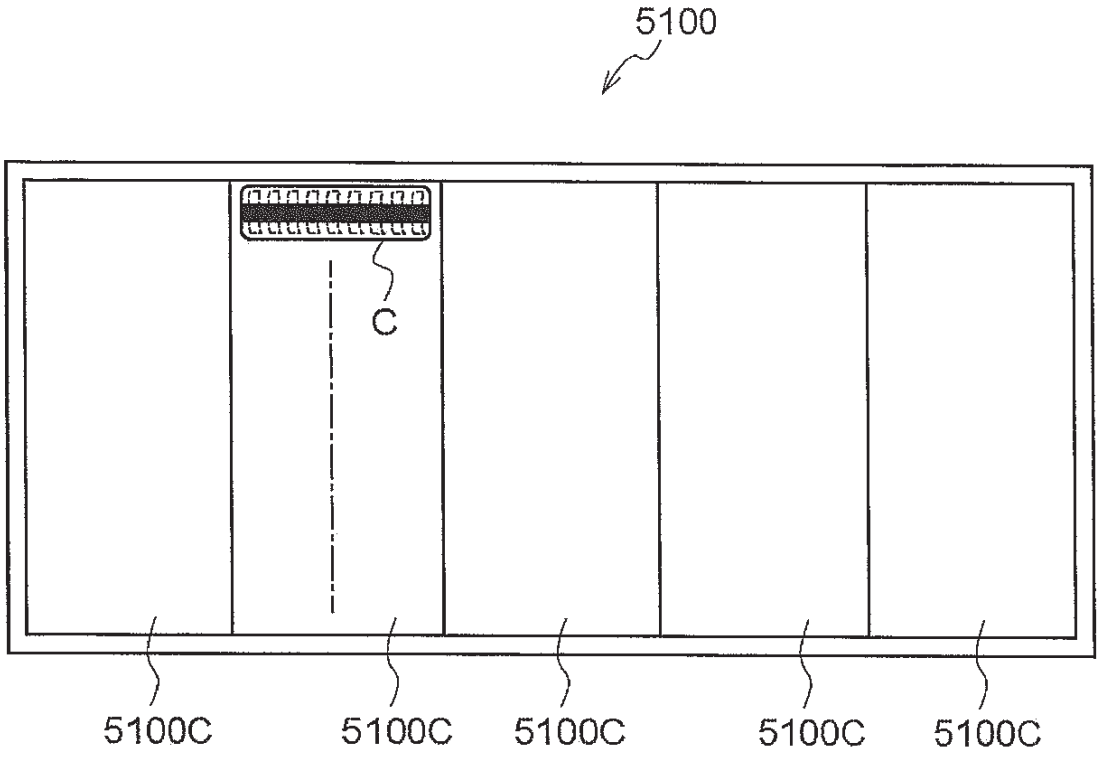

Fig. 34

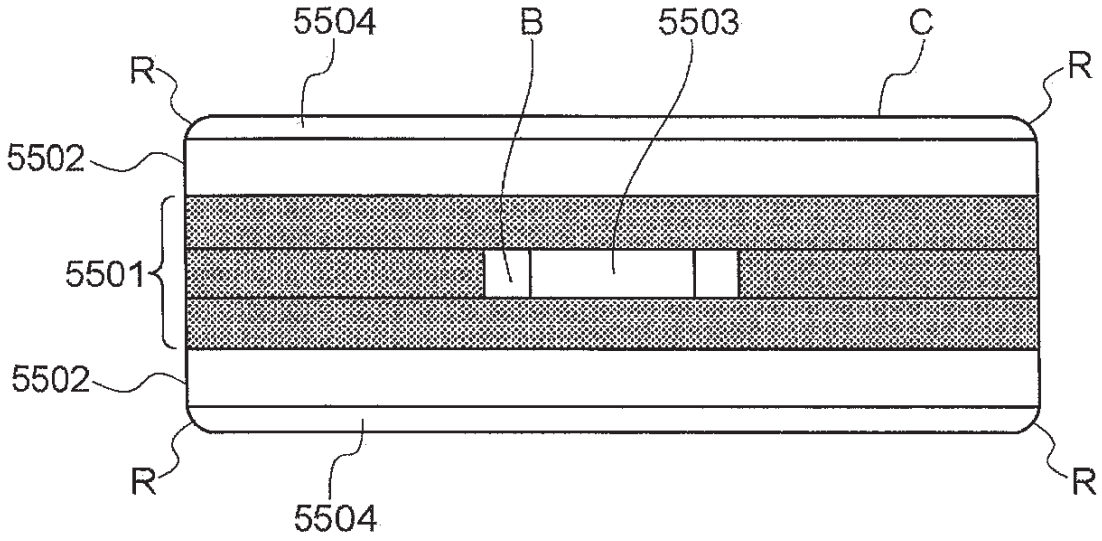

Fig. 35

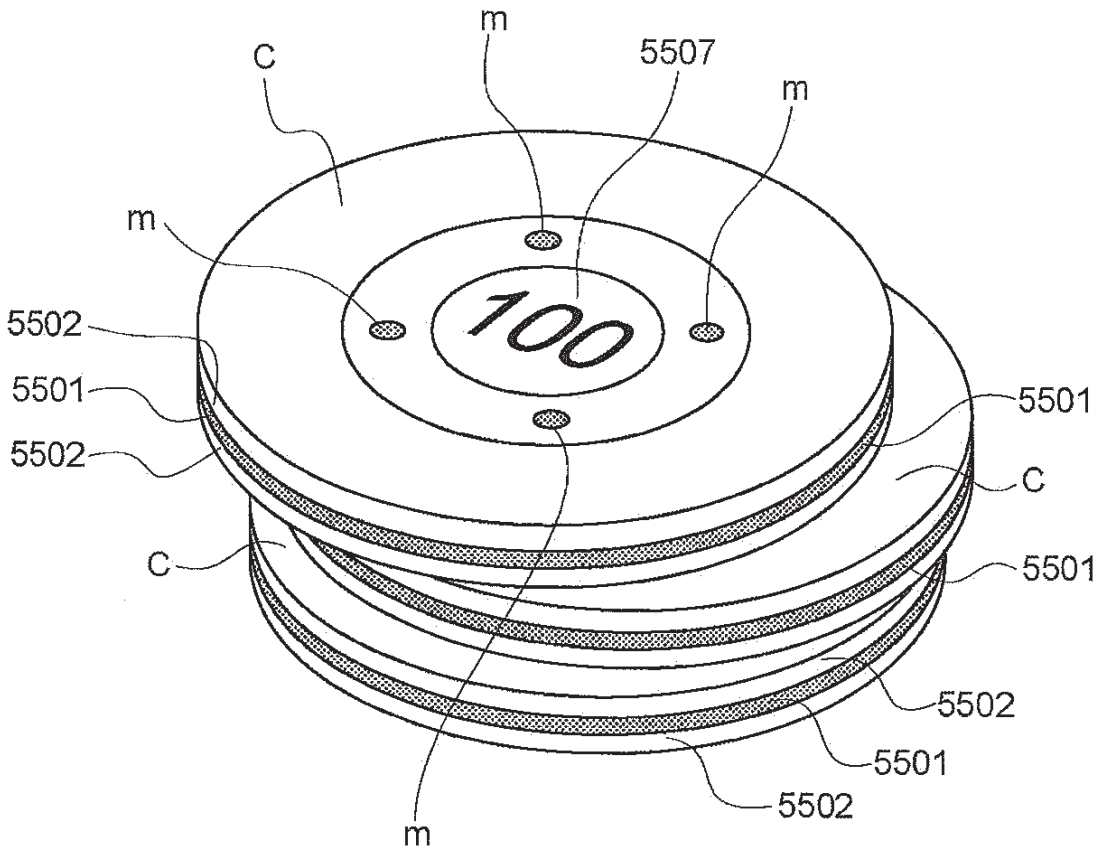

Fig. 36

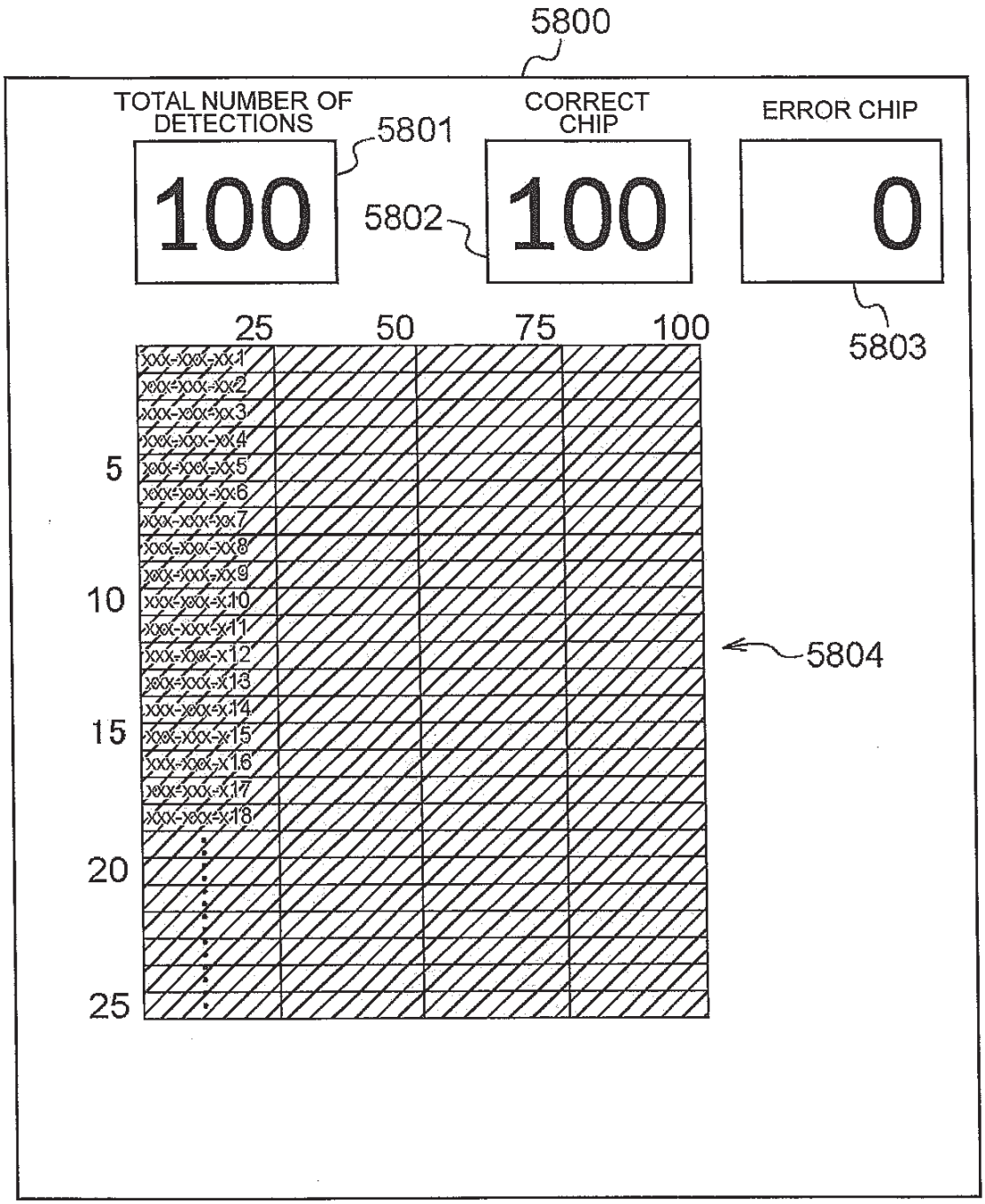
5800
TOTAL NUMBER OF DETECTIONS
5801
CORRECT CHIP
ERROR CHIP
100
5802
100
0
5803
25
50
75
100
5
10
15
20
25
5804

Fig. 37

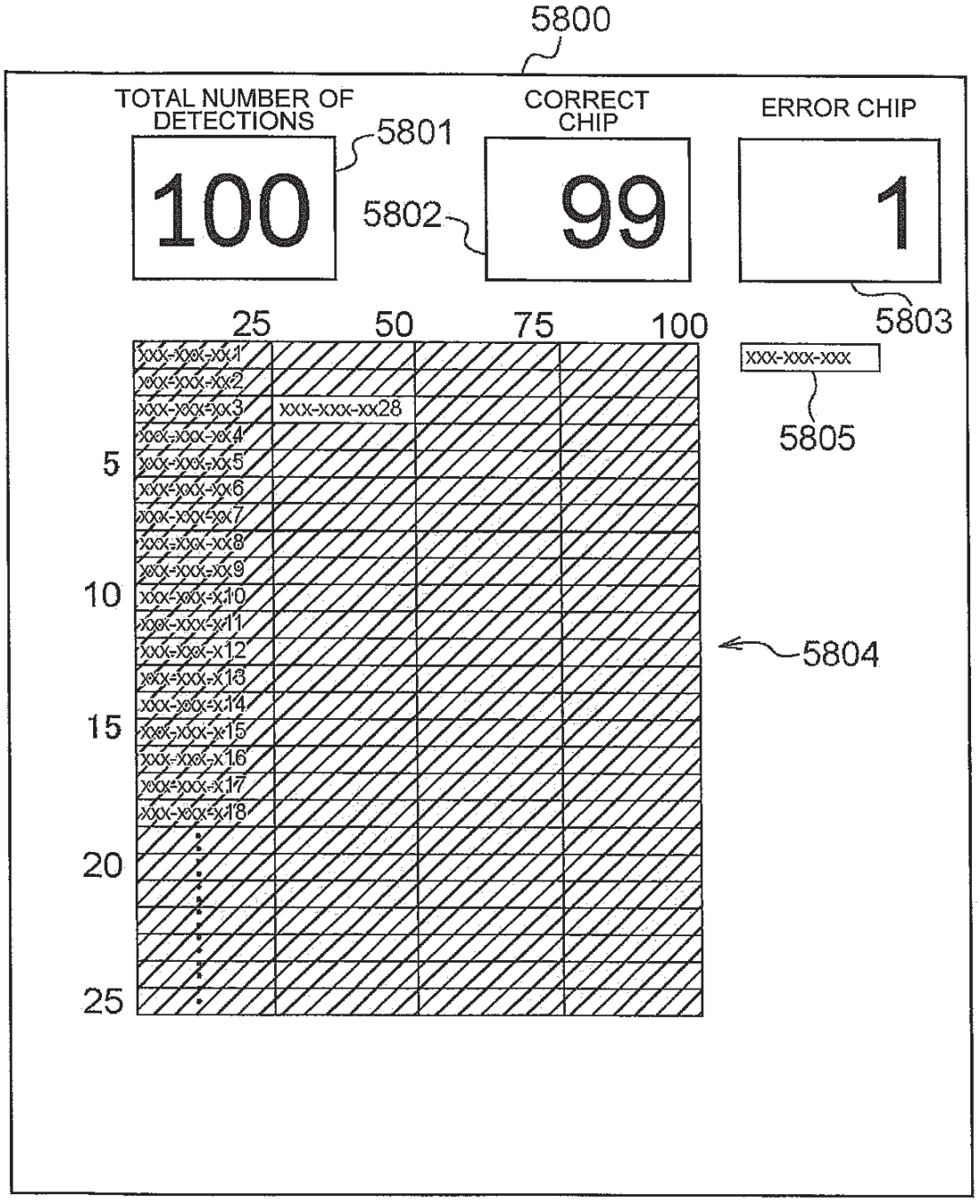
5800
TOTAL NUMBER OF DETECTIONS
5801
100
CORRECT CHIP
5802
99
ERROR CHIP
1
5803
25
50
75
100
xxx-xxx-xx28
xxx-xxx-xxx
5805
5804
5
10
15
20
25

Fig. 38

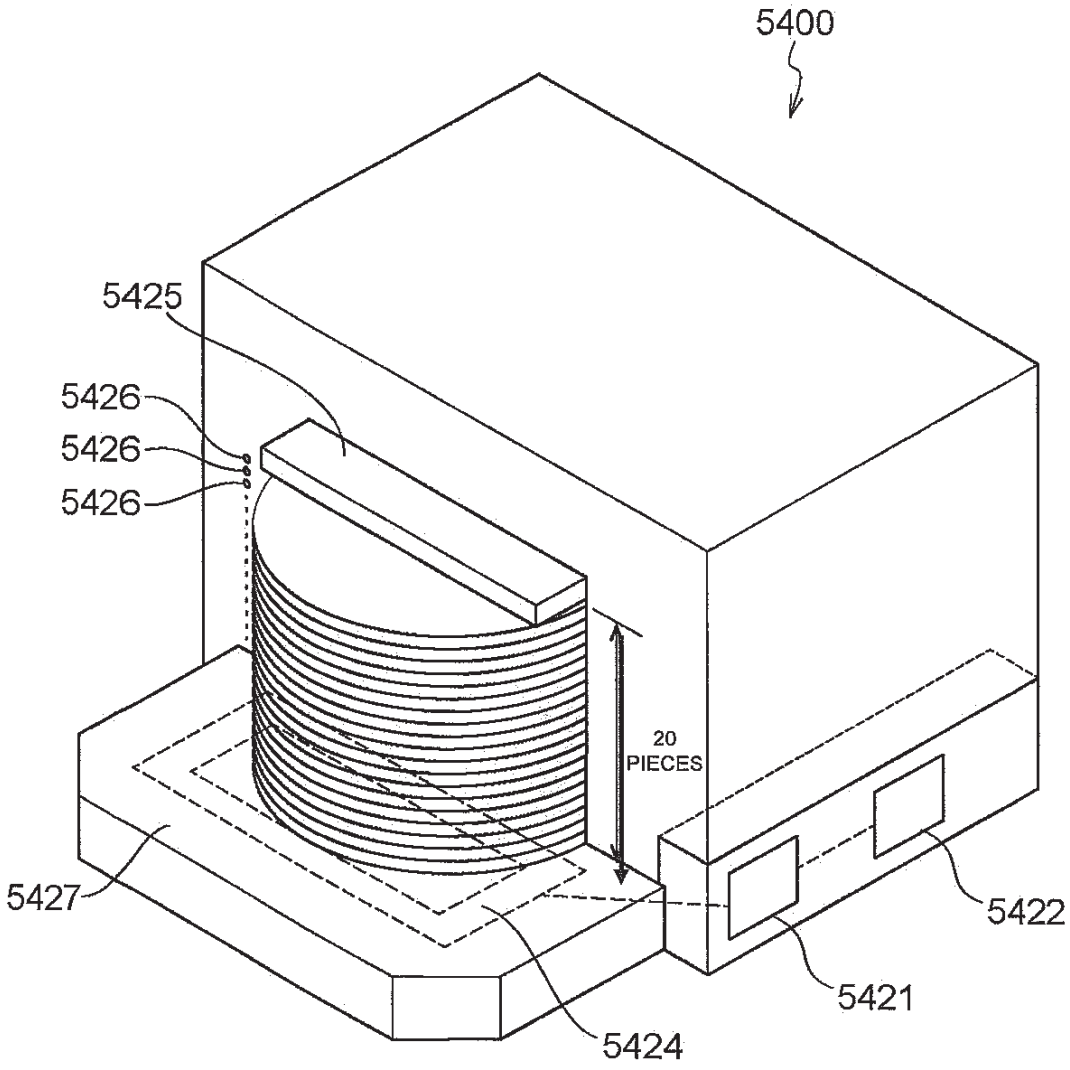

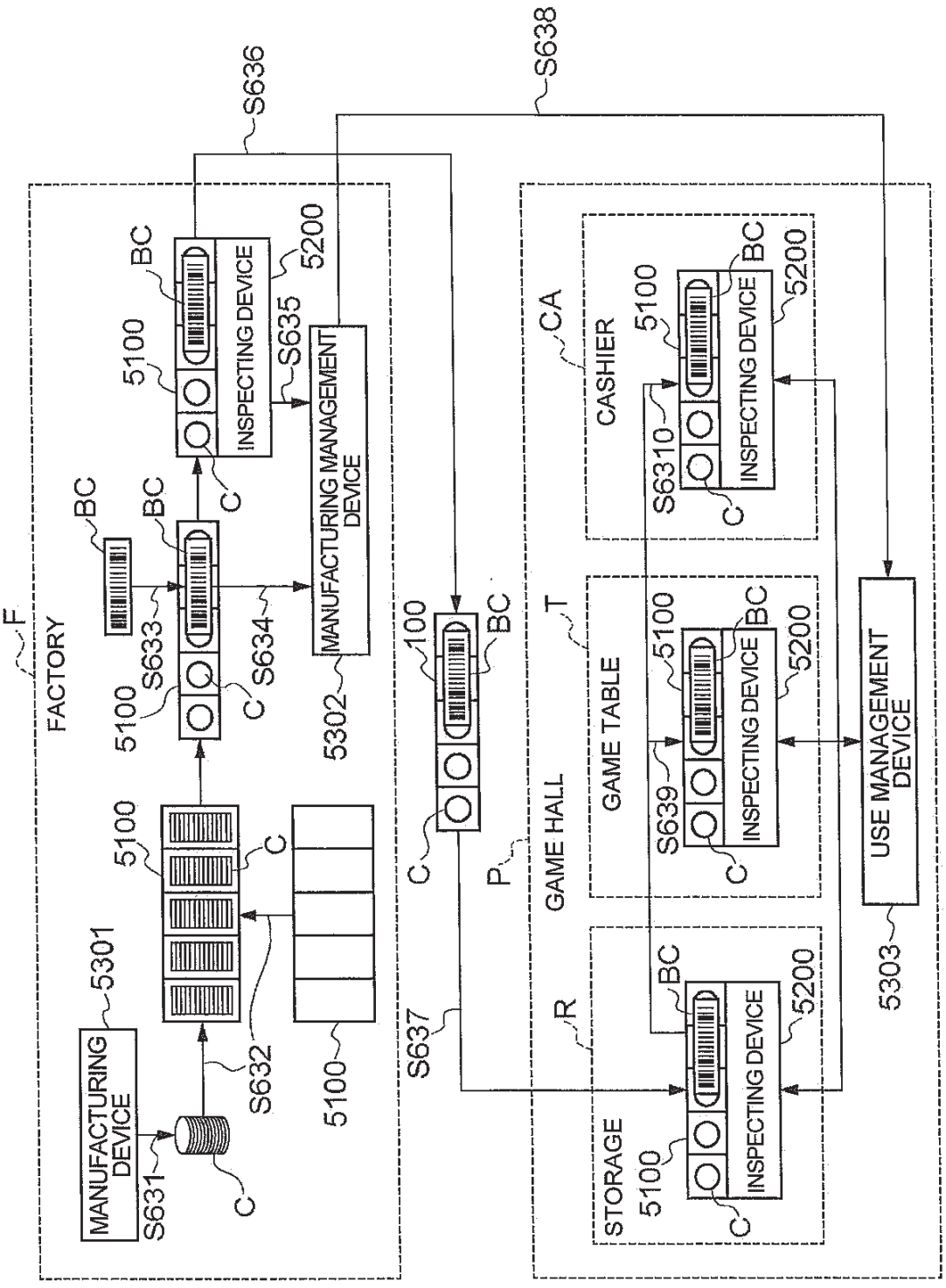
FACTORY
F
MANUFACTURING DEVICE
5301
S631
C
S632
5100
C
5100
S633
BC
BC
C
S634
5100
C
INSPECTING DEVICE
5200
S635
BC
MANUFACTURING MANAGEMENT DEVICE
5302
S636
S638
100
BC
C
S637
GAME HALL
P
CASHIER
CA
5100
BC
5200
INSPECTING DEVICE
S6310
C
GAME TABLE
T
5100
BC
5200
INSPECTING DEVICE
S639
C
STORAGE
R
BC
5200
INSPECTING DEVICE
5100
C
USE MANAGEMENT DEVICE
5303

Fig. 39