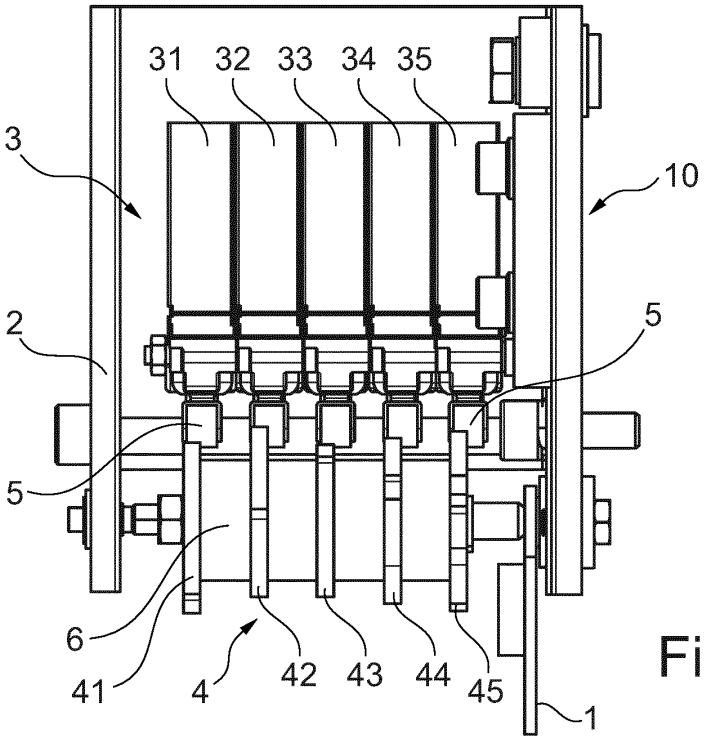
31
32
33
34
35
3
10
2
5
5
6
41
4
42
43
44
45
1

Fig. 1

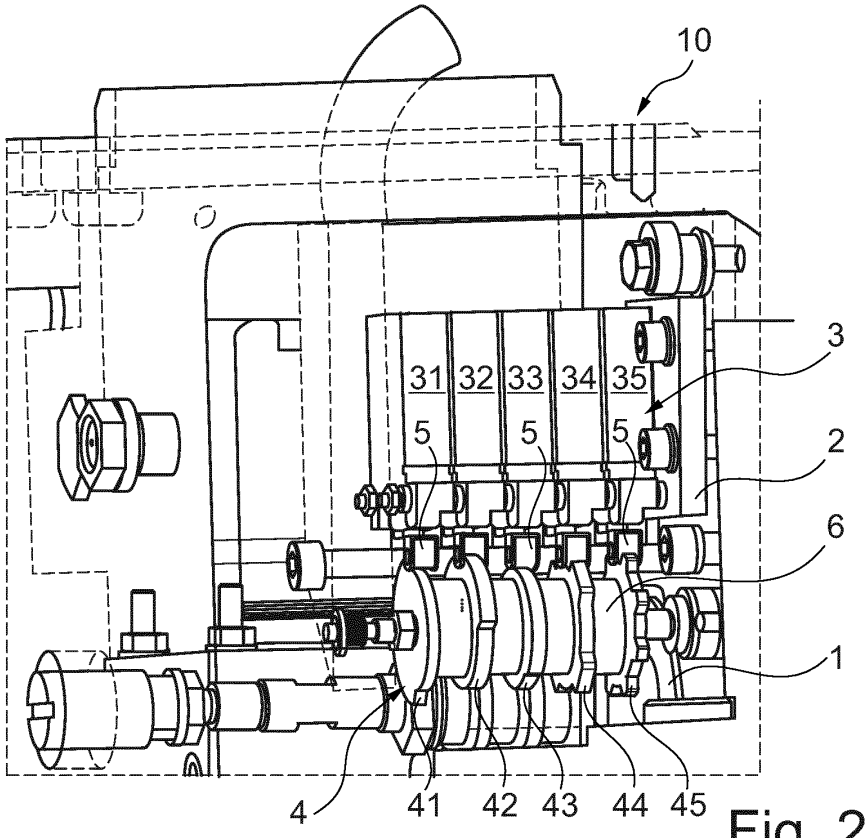
10
3
31
32
33
34
35
5
5
5
2
6
1
4
41
42
43
44
45

Fig. 2

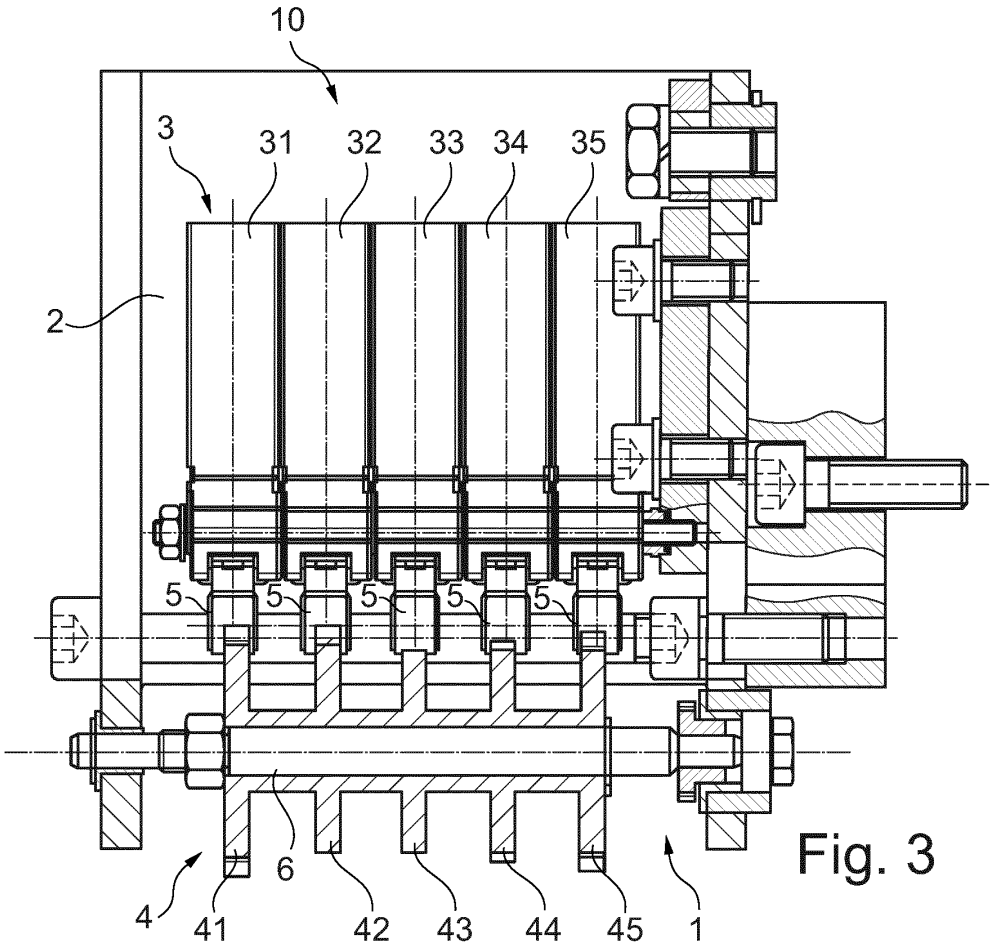

Fig. 3

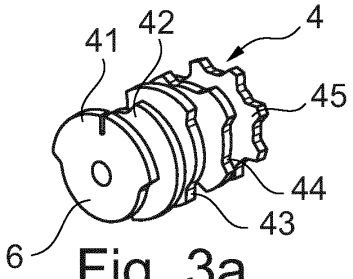

Fig. 3a

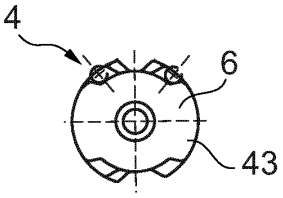

Fig. 3c

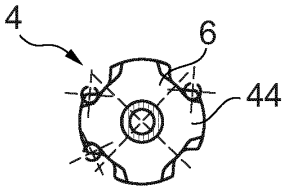

Fig. 3d

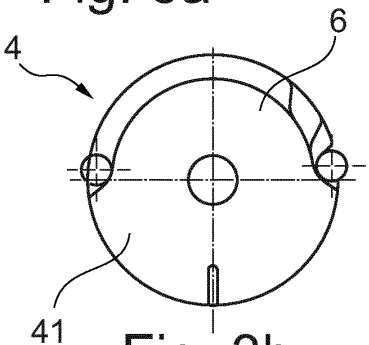

Fig. 3b

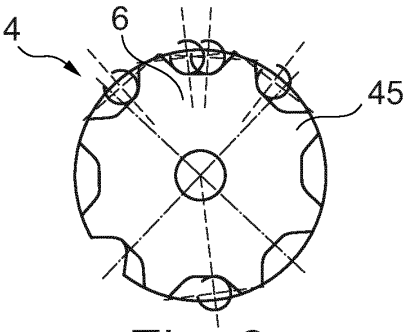

Fig. 3e

Grad/ Antrieb	Zahl	1. Schalter	2. Schalter	3. Schalter	4. Schalter	5. Schalter
0,00°	1	1	0	0	0	0
3,09°	2	0	0	0	0	0
6,19°	3	0	0	0	0	1
9,28°	4	0	0	0	1	1
12,38°	5	0	0	0	1	0
15,47°	6	0	0	1	1	0
18,56°	7	0	0	1	1	1
21,66°	8	0	0	1	0	1
24,75°	9	0	0	1	0	0
27,84°	10	0	1	1	0	0
30,94°	11	0	1	1	0	1
34,93°	12	0	1	1	1	1
37,13°	13	0	1	1	1	0
40,22°	14	0	1	0	1	0
43,31°	15	0	1	0	1	1
46,41°	16	0	1	0	0	1
49,50°	17	0	1	0	0	0
52,59°	18	1	1	0	0	0
55,69°	19	1	1	0	0	1
58,78°	20	1	1	0	1	1
61,88°	21	1	1	0	1	0
64,97°	22	1	1	1	1	0
68,06°	23	1	1	1	1	1
71,16°	24	1	1	1	0	1
74,25°	25	1	1	1	0	0
77,34°	26	1	0	1	0	0
80,44°	27	1	0	1	0	1
83,53°	28	1	0	1	1	1
86,63°	29	1	0	1	1	0
89,72°	30	1	0	0	1	0
92,81°	31	1	0	0	1	1
95,91°	32	1	0	0	0	1
0,00°	1	1	0	0	0	0

Fig. 4