(12) INTERNATIONAL APPLICATION PUBLISHED UNDER THE PATENT COOPERATION TREATY (PCT)

(19) World Intellectual Property Organization
International Bureau

(43) International Publication Date
14 August 2025 (14.08.2025)

WIPO | PCT

(10) International Publication Number
WO 2025/170626 A1

(51) International Patent Classification:
H02K 23/54 (2006.01) *H02J 3/30* (2006.01)
F16F 15/315 (2006.01) *H02K 53/00* (2006.01)

(21) International Application Number:
PCT/US2024/041725

(22) International Filing Date:
09 August 2024 (09.08.2024)

(25) Filing Language: English

(26) Publication Language: English

(30) Priority Data:
18/438,424 10 February 2024 (10.02.2024) US

(72) Inventor; and
(71) Applicant: **SHAKARZAHI, Aziz** [US/US]; 1385 Red Stag Place, Round Rock, Texas 78665 (US).

(74) Agent: **HULSEY, William**; 812 Forest Oaks Circle, Woodway, Texas 76712 (US).

(81) Designated States *(unless otherwise indicated, for every kind of national protection available)*: AE, AG, AL, AM, AO, AT, AU, AZ, BA, BB, BG, BH, BN, BR, BW, BY, BZ, CA, CH, CL, CN, CO, CR, CU, CV, CZ, DE, DJ, DK, DM, DO, DZ, EC, EE, EG, ES, FI, GB, GD, GE, GH, GM, GT, HN, HR, HU, ID, IL, IN, IQ, IR, IS, IT, JM, JO, JP, KE, KG, KH, KN, KP, KR, KW, KZ, LA, LC, LK, LR, LS, LU, LY, MA, MD, MG, MK, MN, MU, MW, MX, MY, MZ, NA, NG, NI, NO, NZ, OM, PA, PE, PG, PH, PL, PT, QA, RO, RS, RU, RW, SA, SC, SD, SE, SG, SK, SL, ST, SV, SY, TH, TJ, TM, TN, TR, TT, TZ, UA, UG, US, UZ, VC, VN, WS, ZA, ZM, ZW.

(84) Designated States *(unless otherwise indicated, for every kind of regional protection available)*: ARIPO (BW, CV, GH, GM, KE, LR, LS, MW, MZ, NA, RW, SC, SD, SL, ST, SZ, TZ, UG, ZM, ZW), Eurasian (AM, AZ, BY, KG, KZ, RU, TJ, TM), European (AL, AT, BE, BG, CH, CY, CZ, DE, DK, EE, ES, FI, FR, GB, GR, HR, HU, IE, IS, IT, LT, LU, LV, MC, ME, MK, MT, NL, NO, PL, PT, RO, RS, SE, SI, SK, SM, TR), OAPI (BF, BJ, CF, CG, CI, CM, GA, GN, GQ, GW, KM, ML, MR, NE, SN, TD, TG).

Published:
— *with international search report (Art. 21(3))*

WO 2025/170626 A1

(54) **Title:** CONSTANT MICRO POWER ENERGY SYSTEM (CMPES) DEVICE

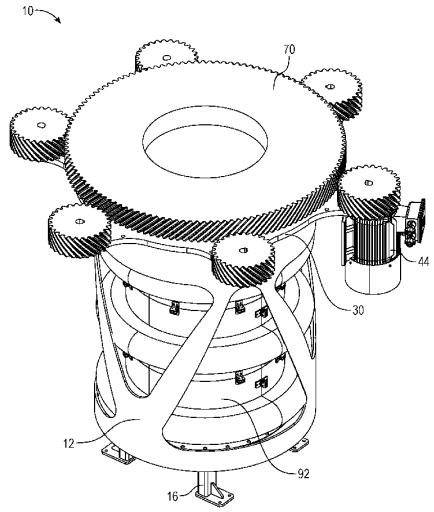

FIG. 1A

(57) **Abstract:** A constant micro power energy system (CMPES) device to harness sustainable energy sources and generate power including a main body structure having a base plate, a frame extending from the base plate, and a top plate positioned at the top of the frame. The CMPES device includes a flask barrel positioned in the frame and motors positioned on the top plate. The CMPES device includes a ring gear connecting the flask barrel and a motor shaft of the motor. The CMPES device includes disc generators positioned inside the flask barrel. The motors supply power to drive the flask barrel to rotate constantly at a predetermined speed in order to generate continuous and simultaneous Alternating Current (AC) and Direct Current (DC) electrical power output. The motors facilitate direct transmission to the disc generators in order to provide the electrical power output to panel systems connected to the CMPES device.