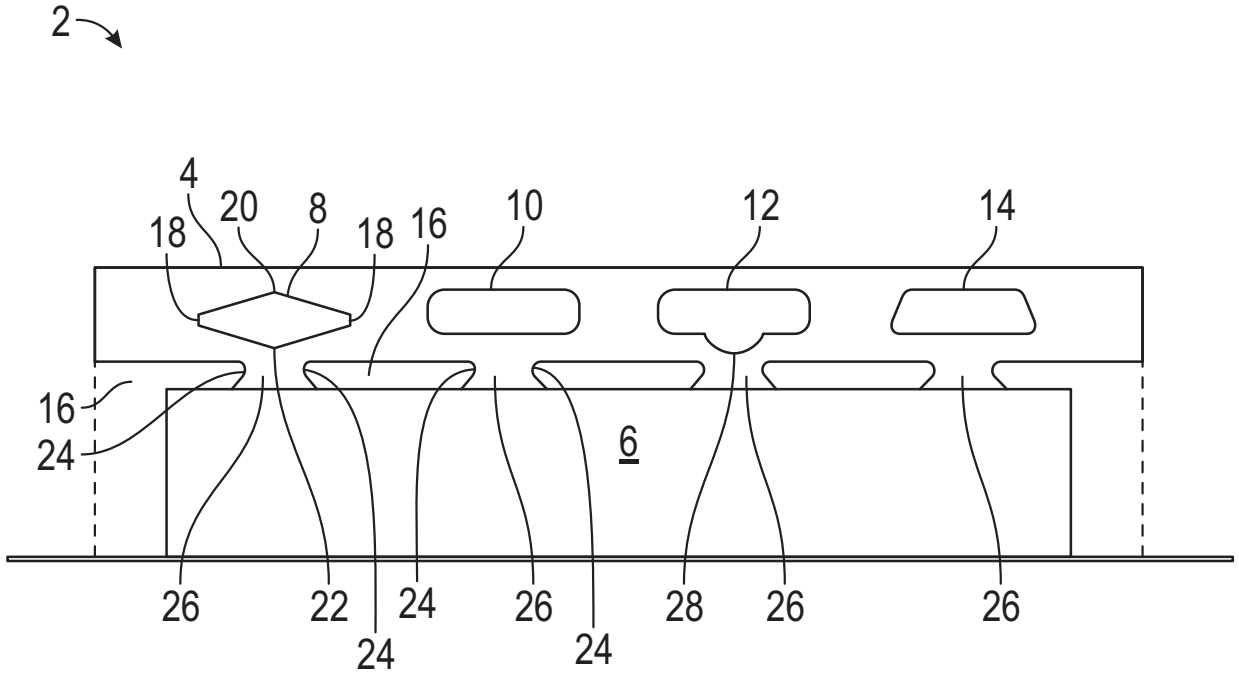
2
4
20
8
18
18
16
10
12
14
16
24
6
26
22
24
24
26
24
28
26
26

FIG. 1

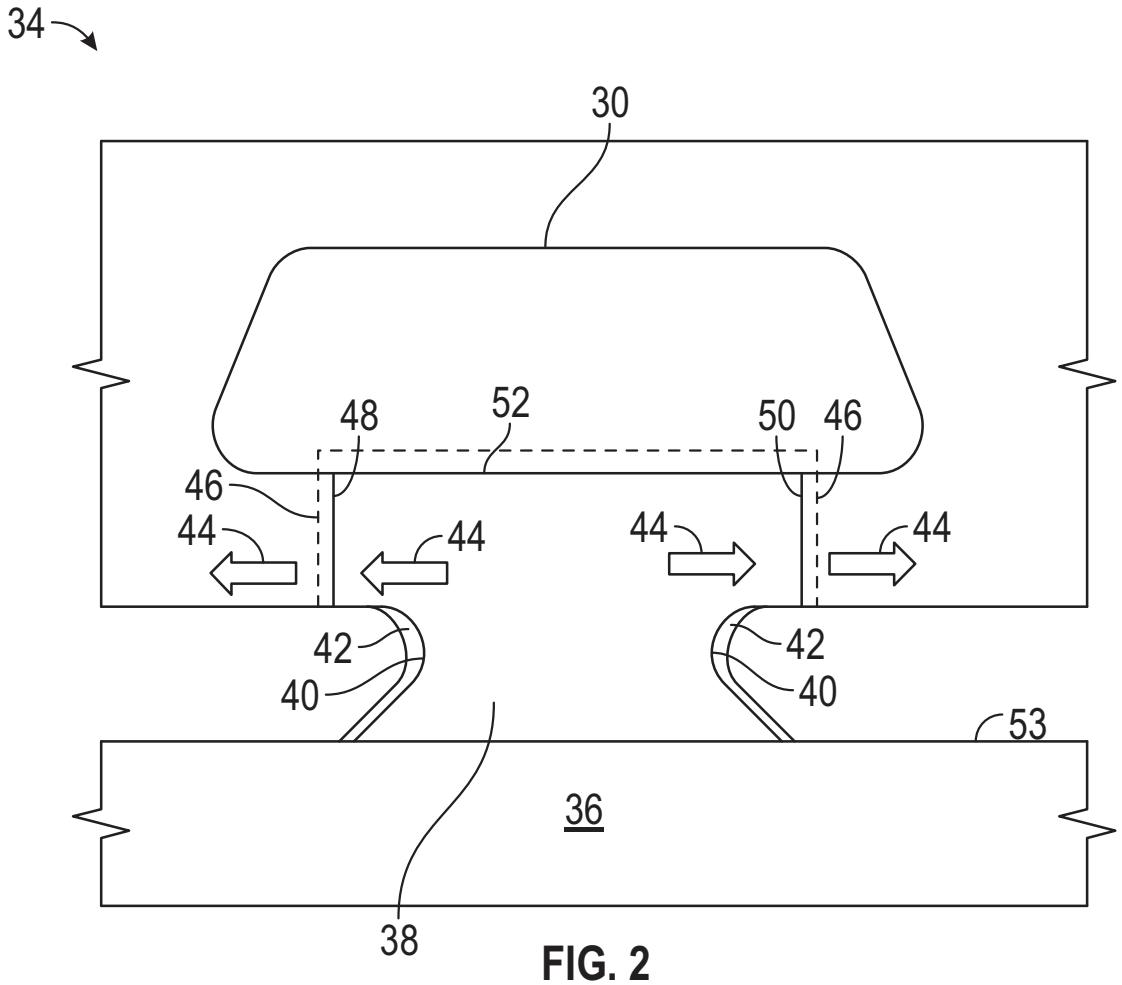
34
30
48
52
50
46
46
44
44
44
44
42
42
40
40
53
36
38

FIG. 2

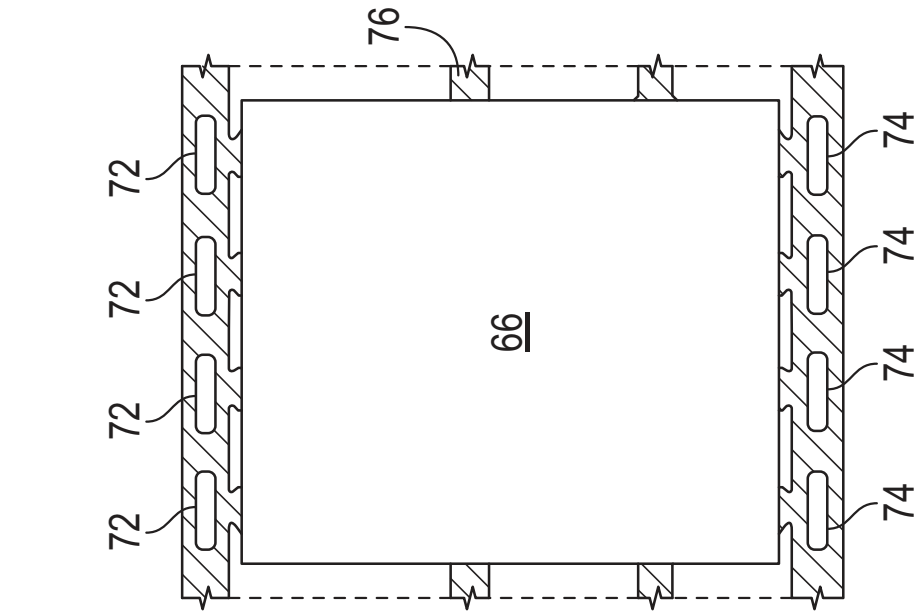

FIG. 5

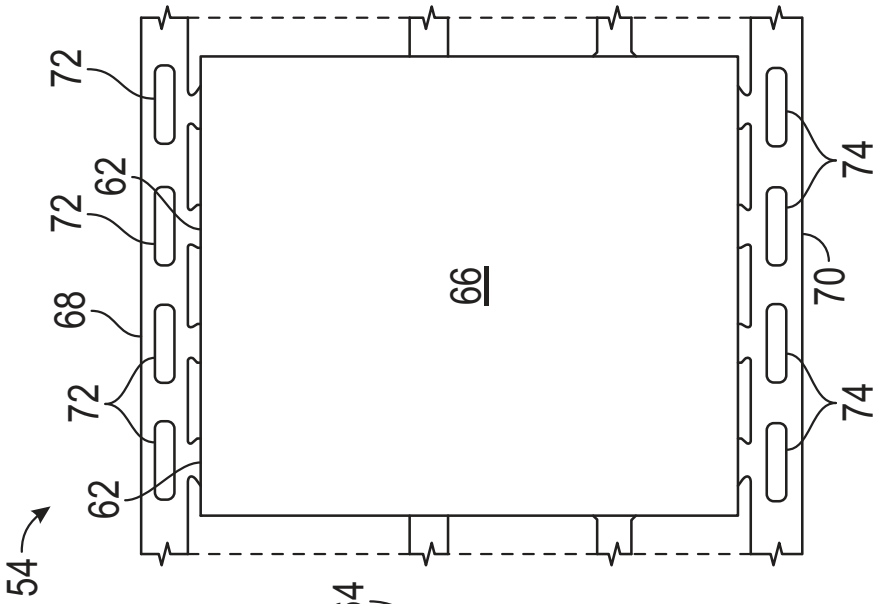

FIG. 4

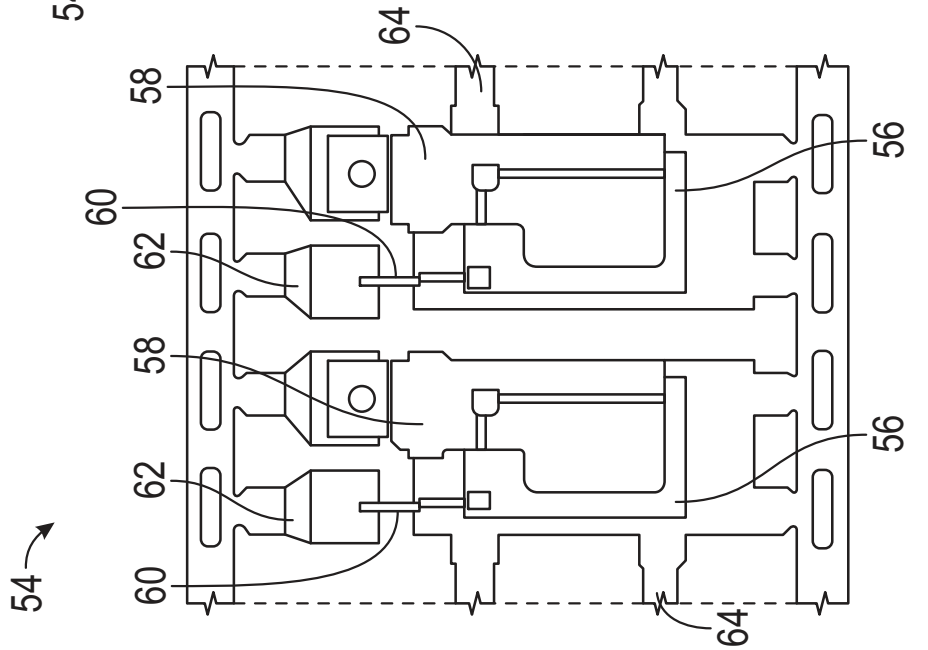

FIG. 3

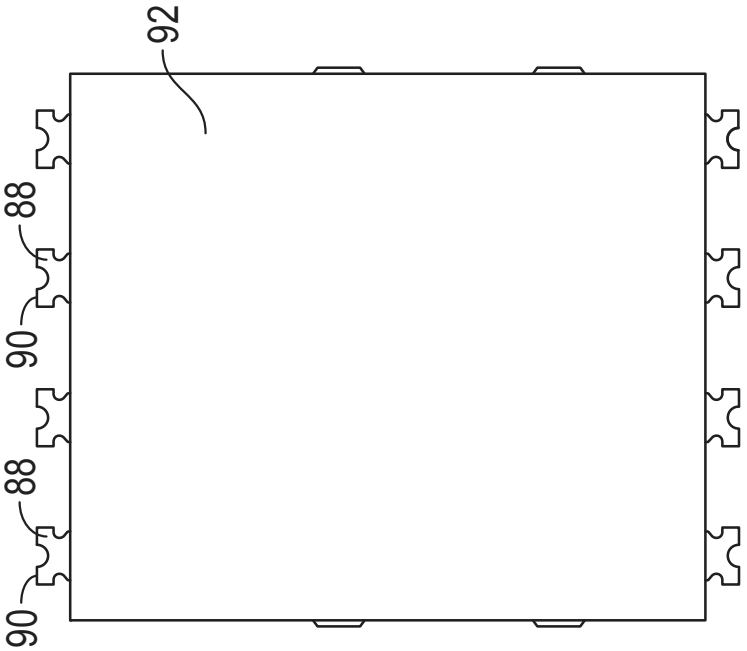

FIG. 8

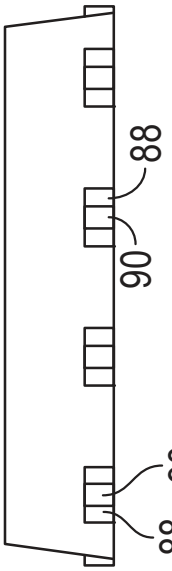

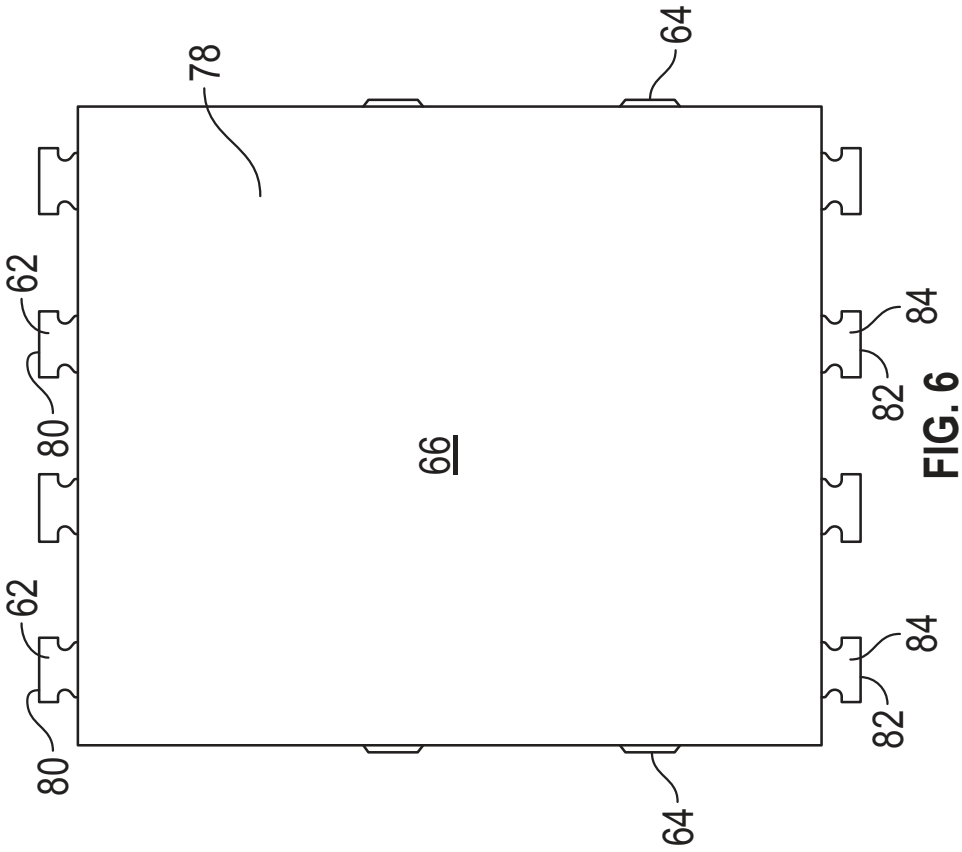

FIG. 6

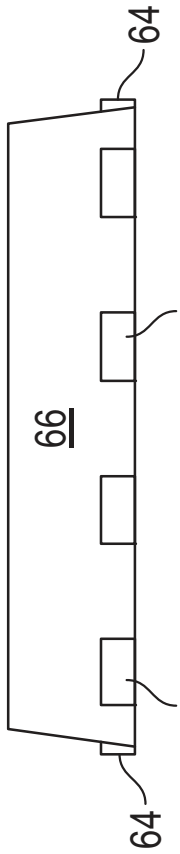

FIG. 7

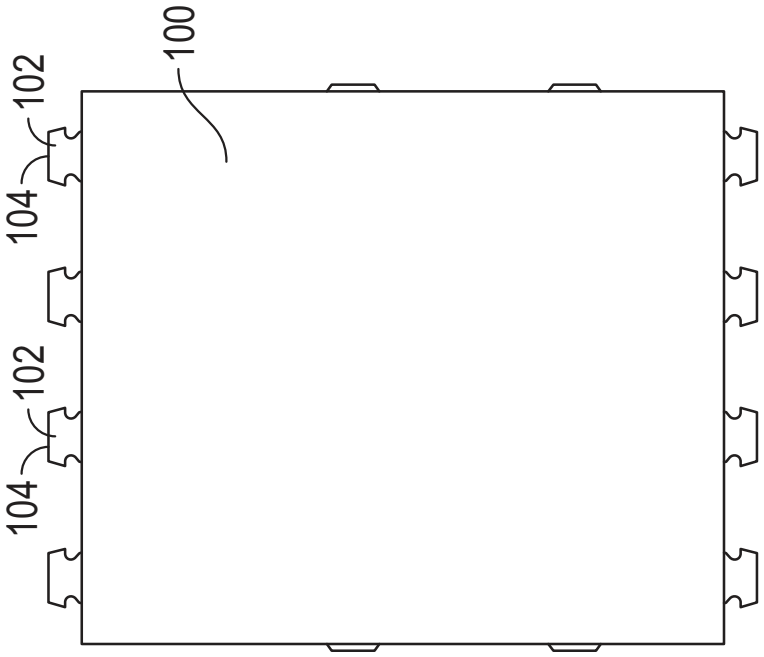

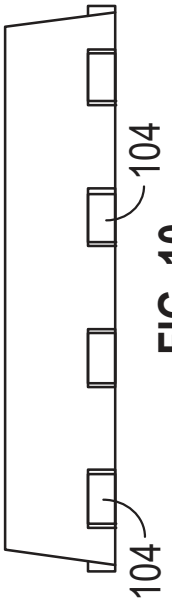

FIG. 10

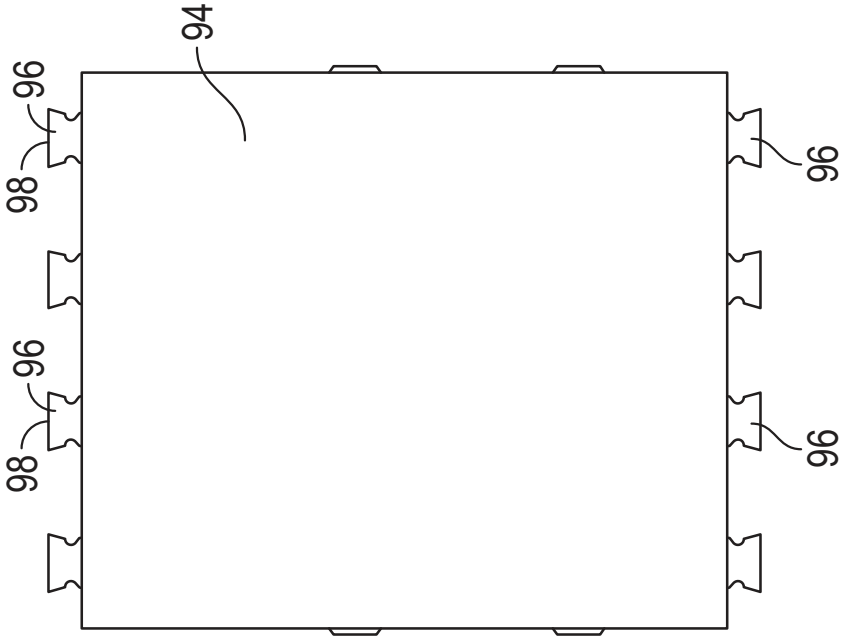



FIG. 9

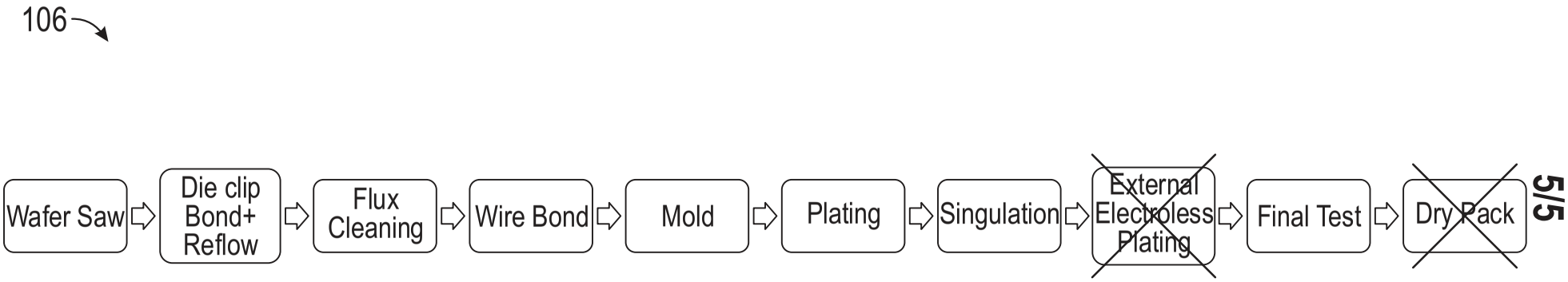
106
Wafer Saw
Die clip Bond+ Reflow
Flux Cleaning
Wire Bond
Mold
Plating
Singulation
External Electroless Plating
Final Test
Dry Pack

FIG. 11