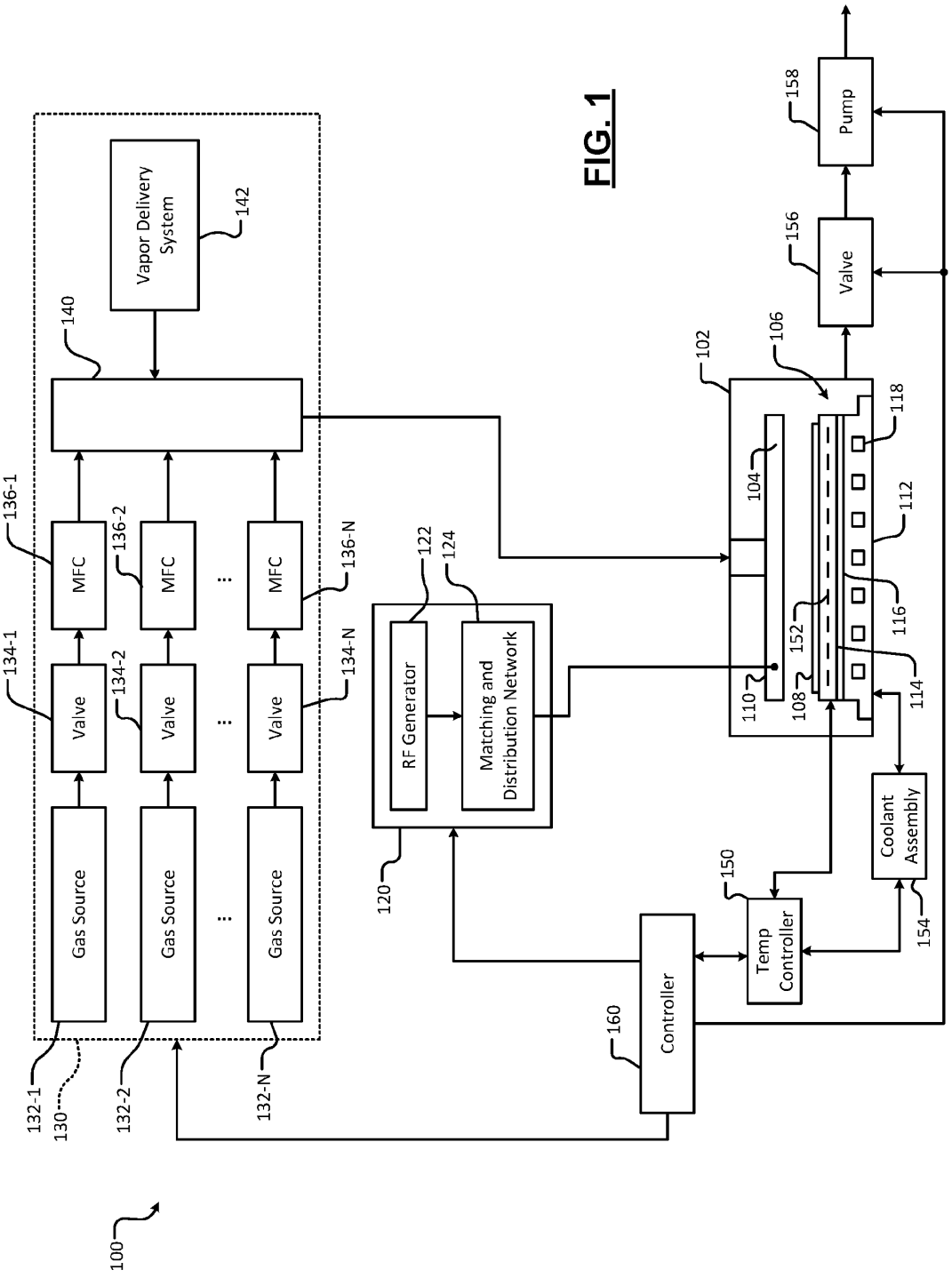
100
132-1
130
132-2
132-N
Gas Source
Gas Source
Gas Source
134-1
134-2
134-N
Valve
Valve
Valve
136-1
136-2
136-N
MFC
MFC
MFC
140
Vapor Delivery System
142
120
122
124
RF Generator
Matching and Distribution Network
102
104
106
108
110
112
114
116
118
152
Coolant Assembly
154
150
Temp Controller
160
Controller
156
Valve
158
Pump

FIG. 1

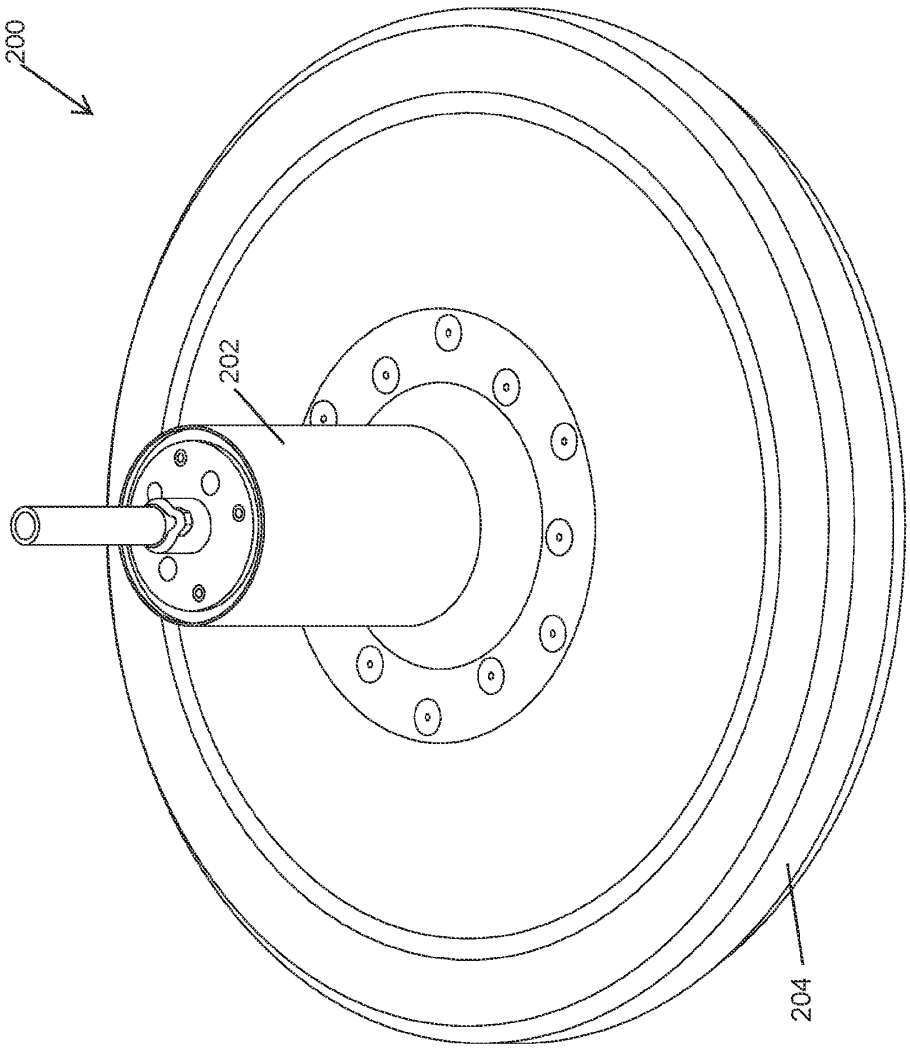

FIG. 2A

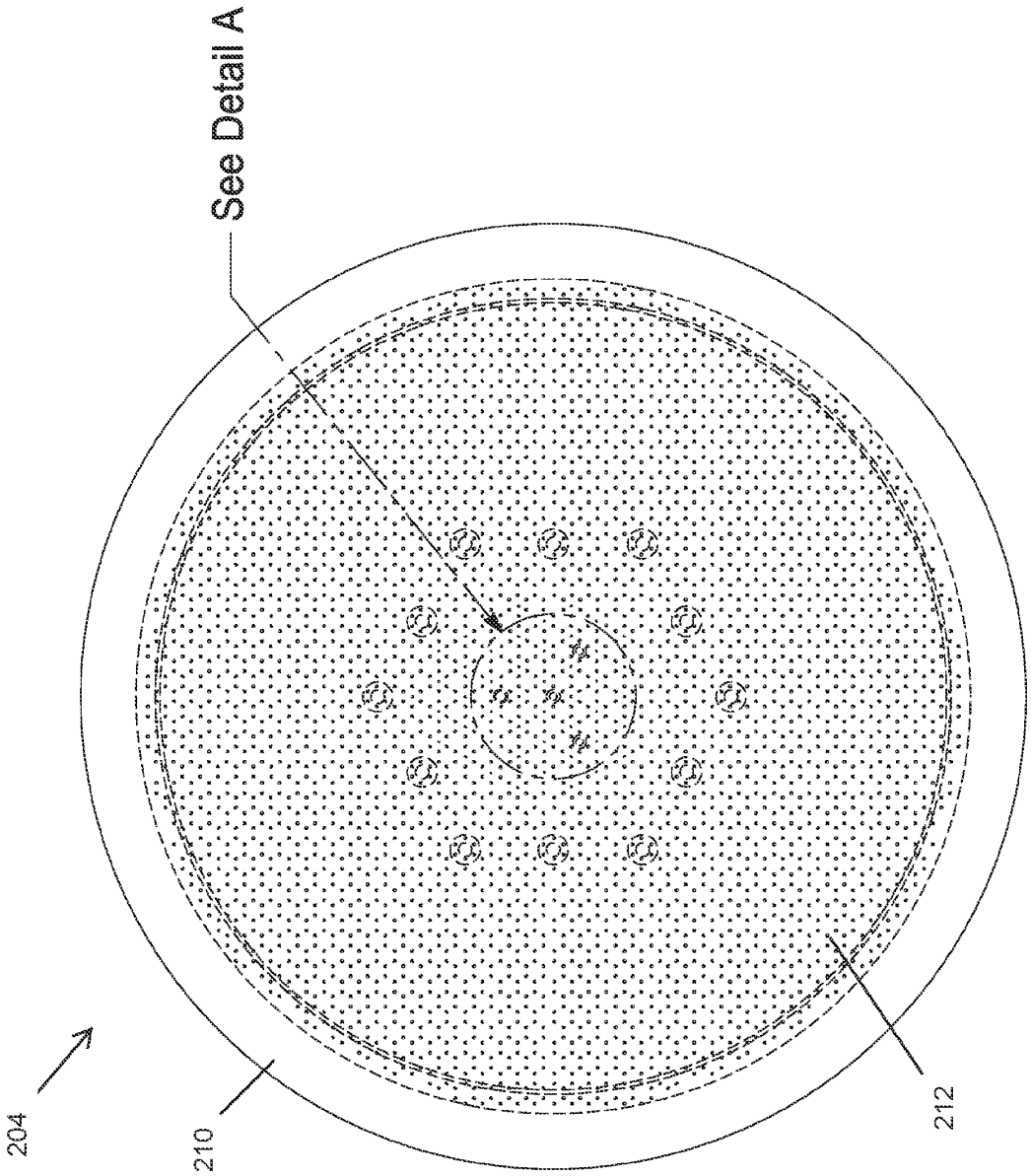

FIG. 2B

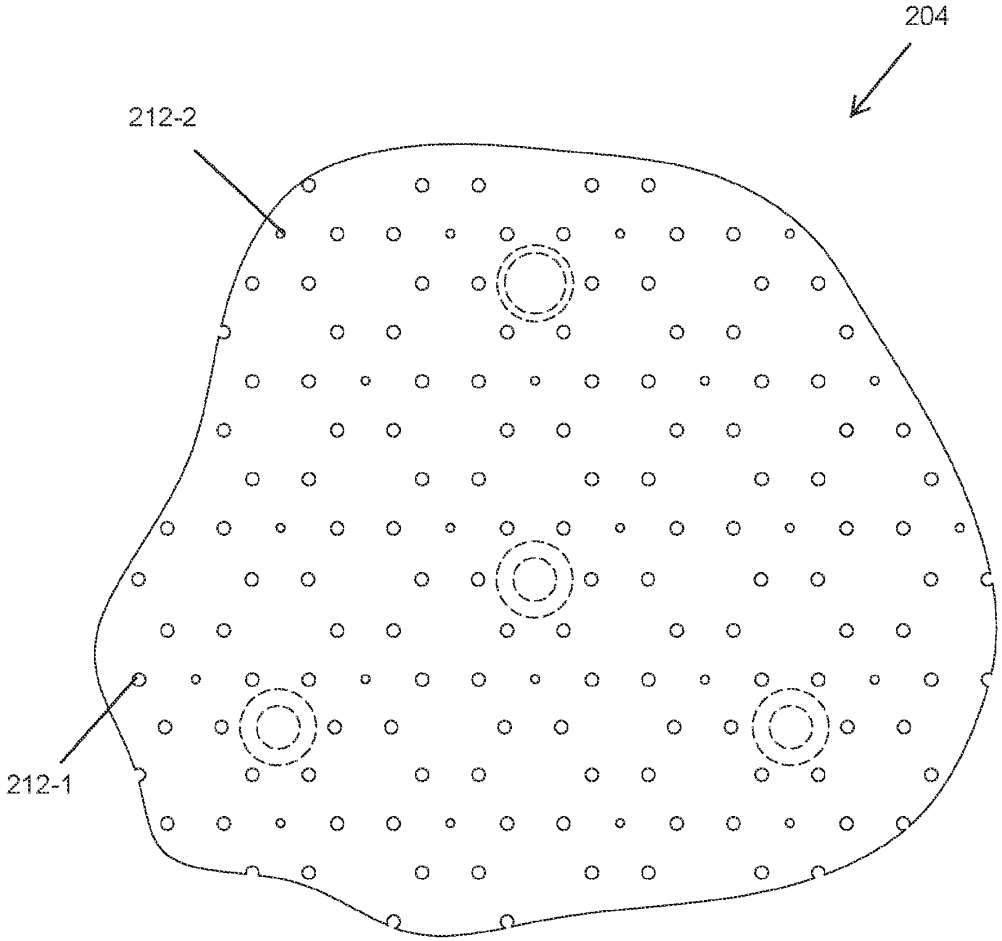

Detail A

FIG. 2C

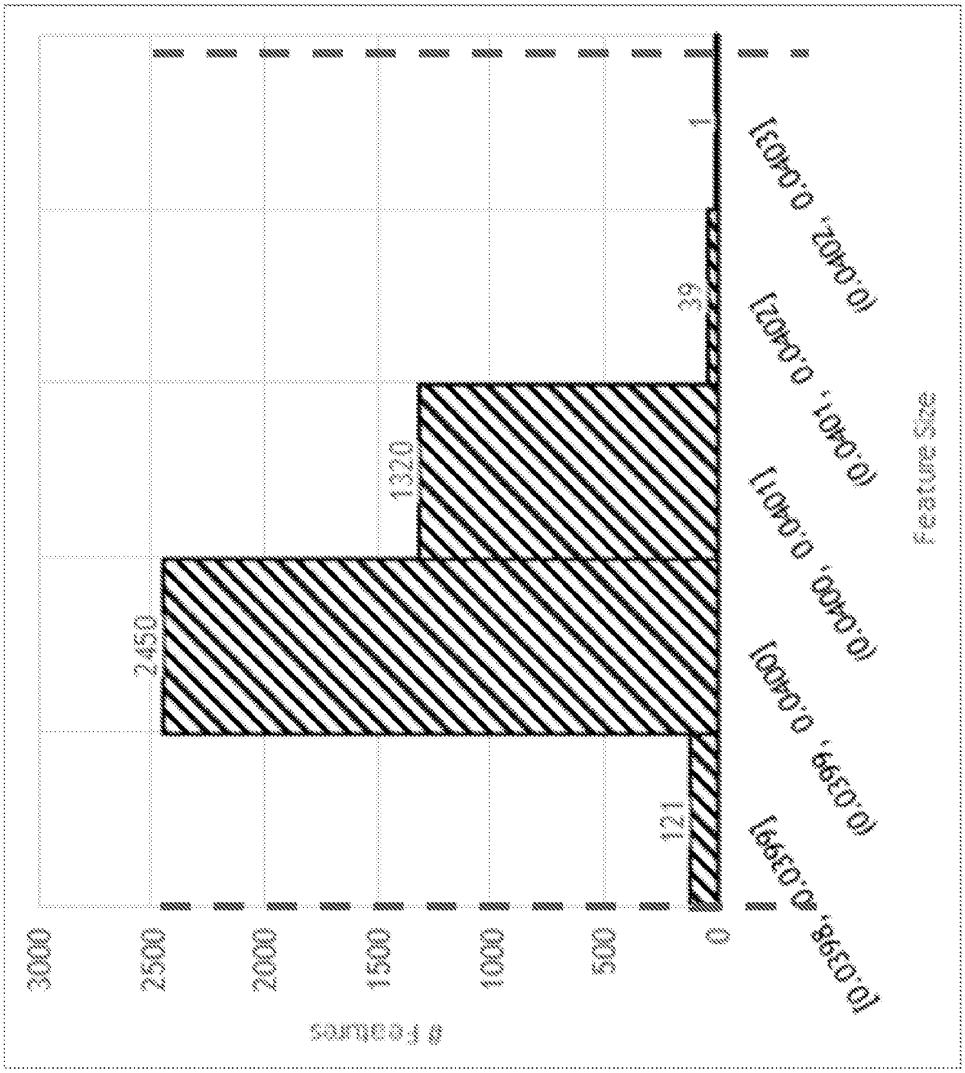
3000
2500
2000
1500
1000
500
0
Features
121
2450
1320
39
1
[0.0398, -0.0399]
(0.0399, 0.0400]
(0.0400, 0.0401]
(0.0401, 0.0402]
(0.0402, 0.0403]
Feature Size

FIG. 3A

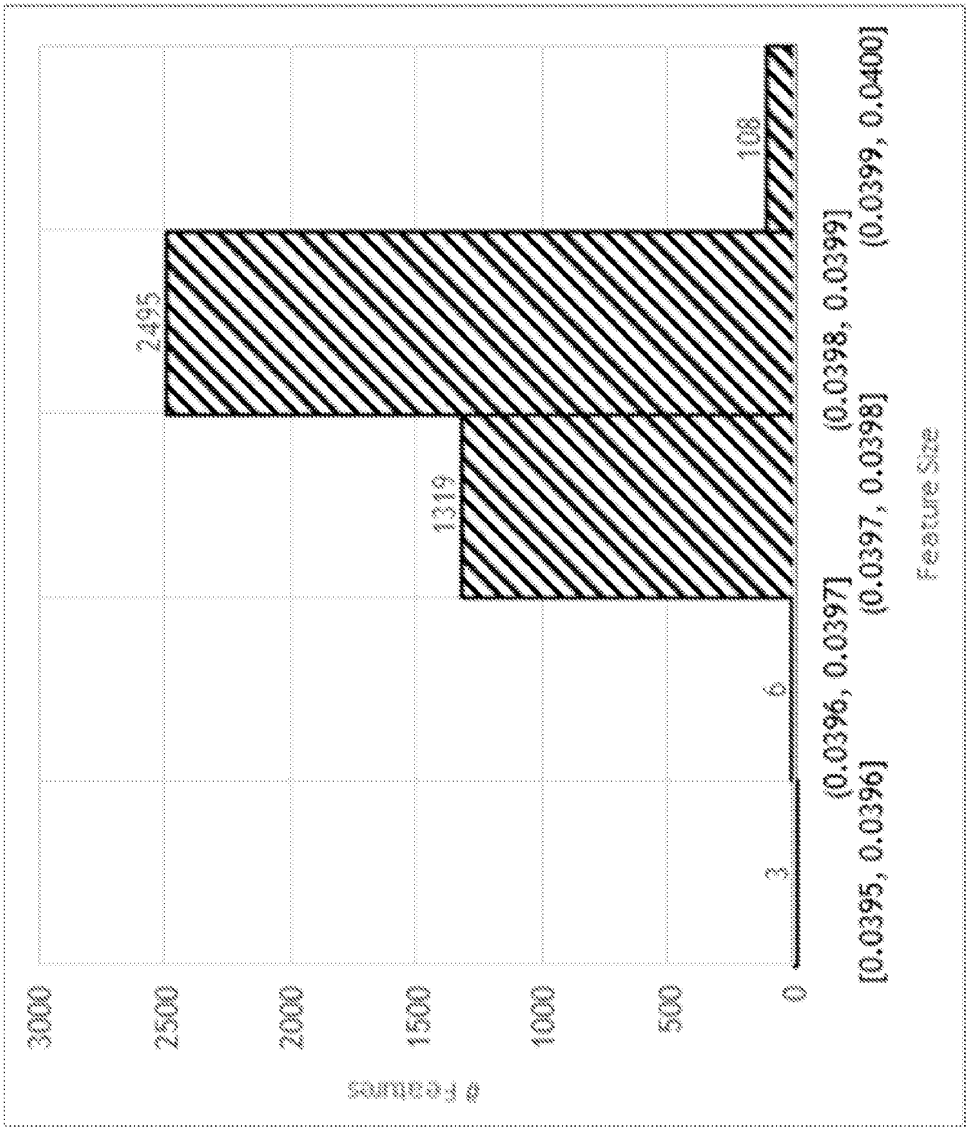
Features
3000
2500
2000
1500
1000
500
0
3
6
1319
2495
108
[0.0395, 0.0396]
(0.0396, 0.0397]
(0.0397, 0.0398]
(0.0398, 0.0399]
(0.0399, 0.0400]
Feature Size

FIG. 3B

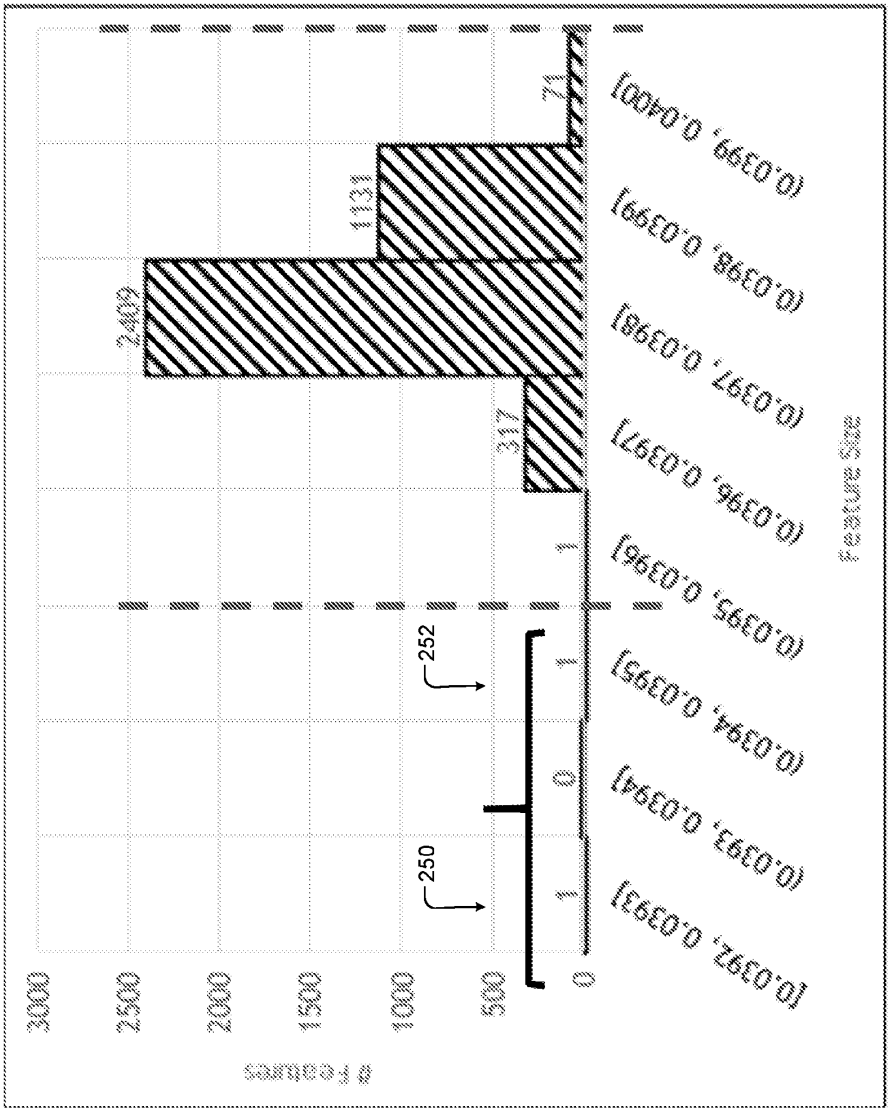
3000
2500
2000
1500
1000
500
0
Features
250
252
1
0
1
1
317
2409
1131
71
[0.0392, 0.0393]
(0.0393, 0.0394]
(0.0394, 0.0395]
(0.0395, 0.0396]
(0.0396, 0.0397]
(0.0397, 0.0398]
(0.0398, 0.0399]
(0.0399, 0.0400]
Feature Size

FIG. 3C

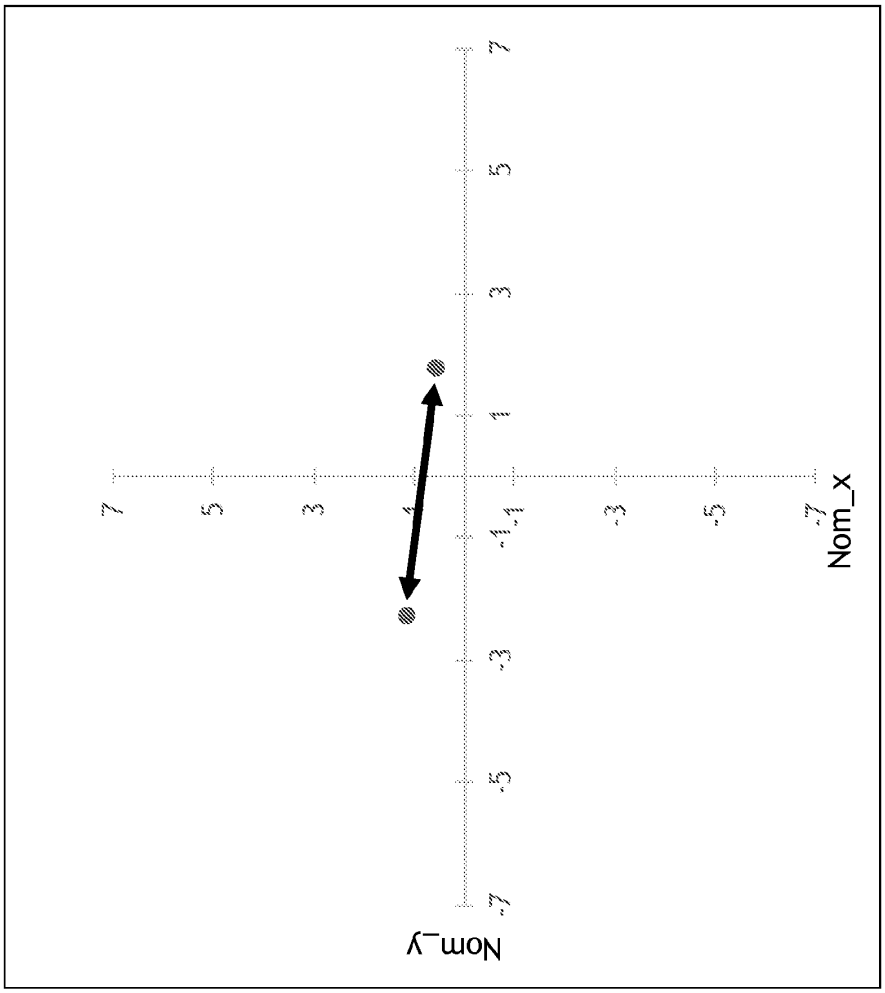

FIG. 3D

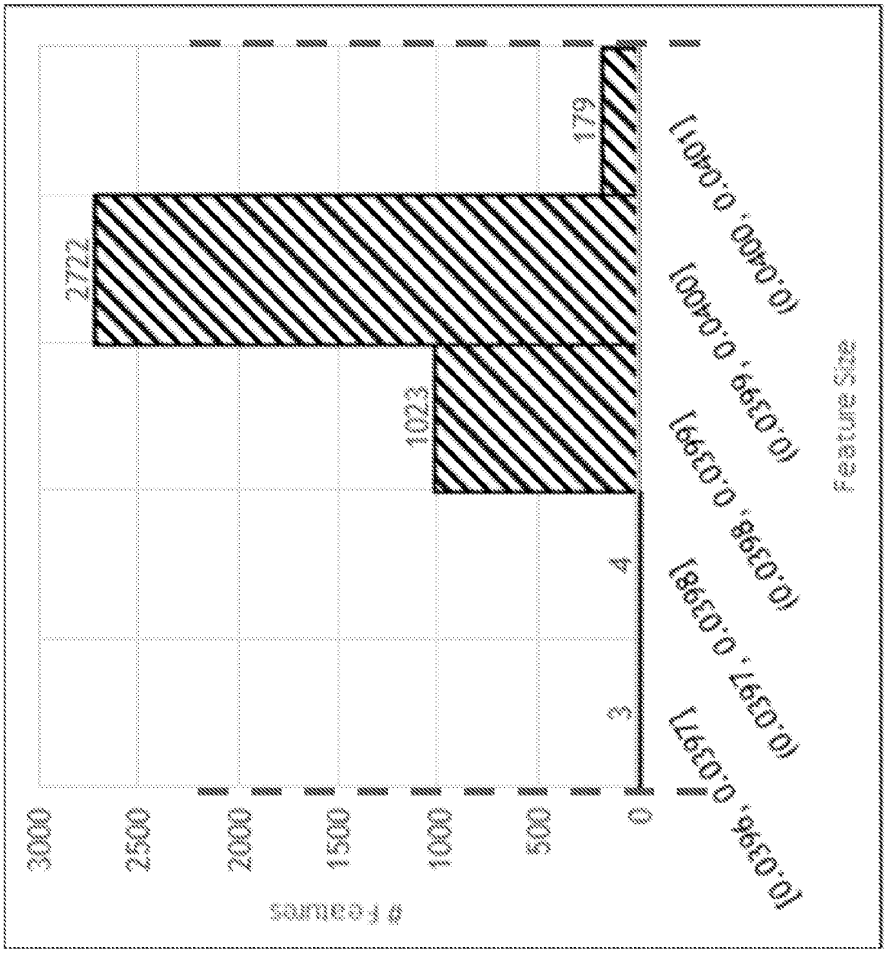
3000
2500
2000
1500
1000
500
0
Features
3
4
1023
2722
179
[0.0396, 0.0397]
(0.0397, 0.0398]
(0.0398, 0.0399]
(0.0399, 0.0400]
(0.0400, 0.0401]
Feature Size

FIG. 3E

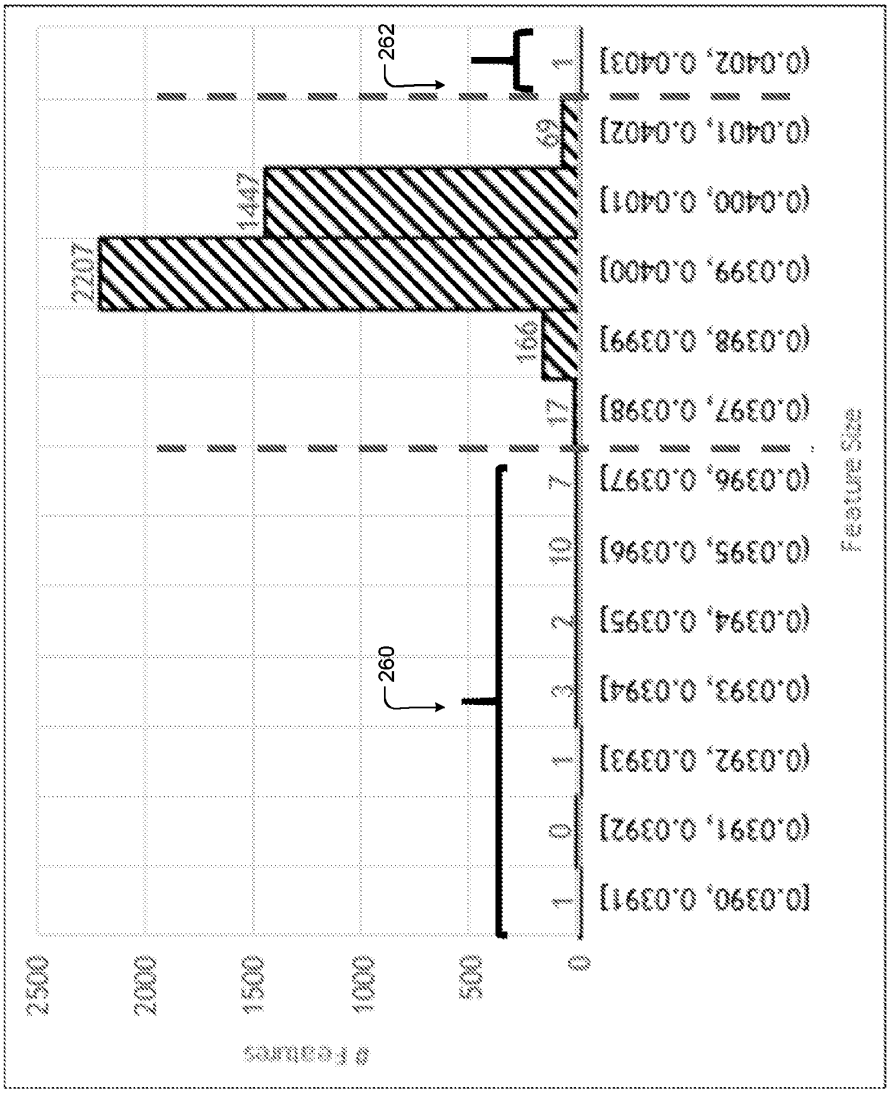
2500
2000
1500
1000
500
0
Features
1
0
1
3
2
10
7
17
166
2207
1447
69
1
260
262
[0.0390, 0.0391]
(0.0391, 0.0392]
(0.0392, 0.0393]
(0.0393, 0.0394]
(0.0394, 0.0395]
(0.0395, 0.0396]
(0.0396, 0.0397]
(0.0397, 0.0398]
(0.0398, 0.0399]
(0.0399, 0.0400]
(0.0400, 0.0401]
(0.0401, 0.0402]
(0.0402, 0.0403]
Feature Size

FIG. 3F

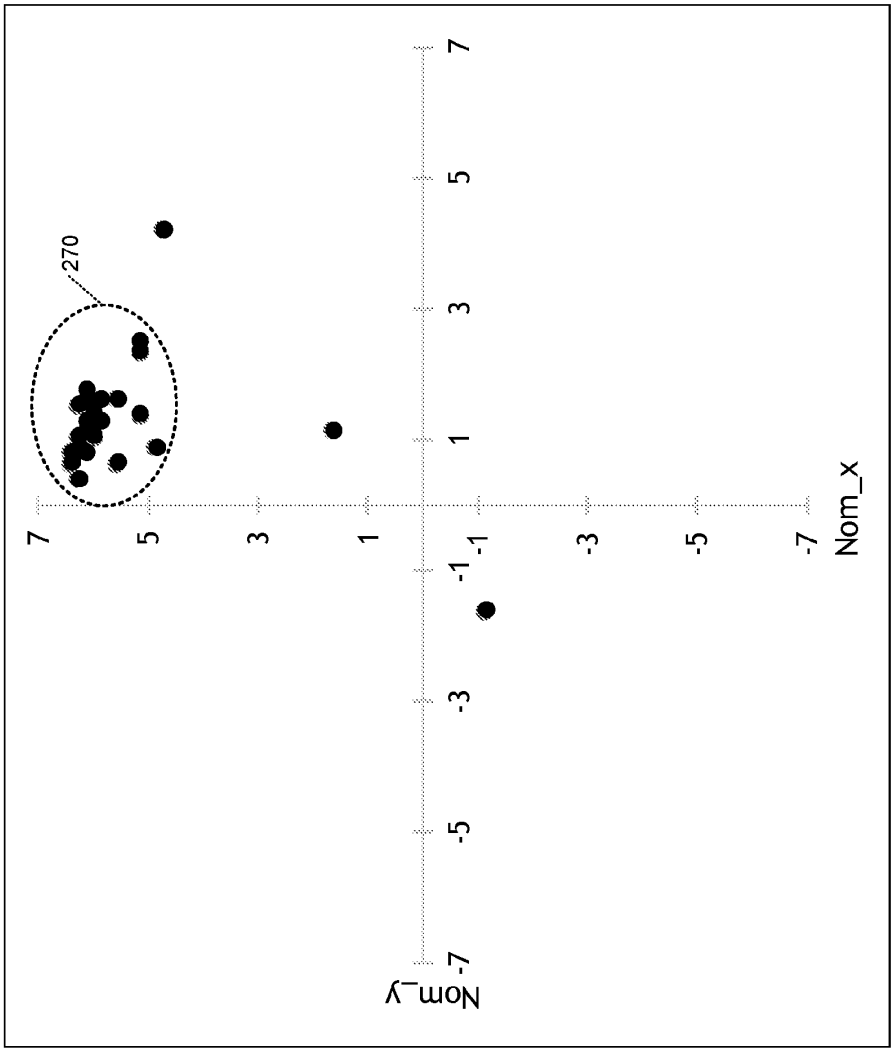

FIG. 3G

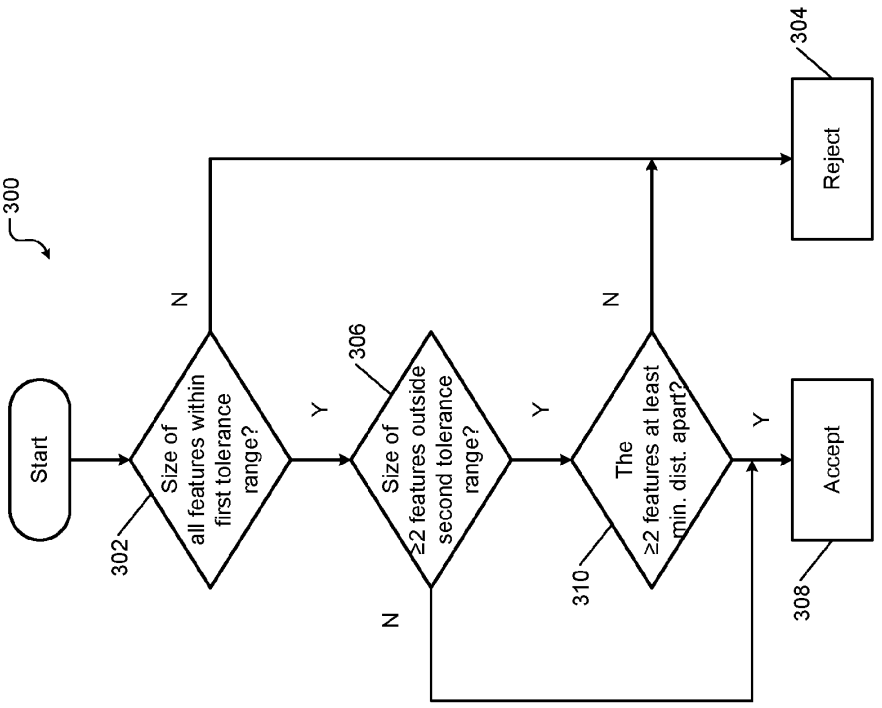
300
Start
Size of all features within first tolerance range?
302
N
Y
Size of ≥2 features outside second tolerance range?
306
N
Y
The ≥2 features at least min. dist. apart?
310
N
Y
Reject
304
Accept
308

FIG. 3H

Symbol	Factor	Definition
T	Nominal target size *[nom dia]*	This defines the target mean value of the diameter for all features, as well as the target population mean.
t	Cutoff tolerance range *[tol]*	The distance from the nominal target size at which point no feature can exceed, or the part is rejected. This can typically be left as the historic tolerance value. Value is to be specified as a ± number.
D_T	Max mean deviation from nominal target for mean of entire population *[max mean dev]*	The bounding window for the population mean. This does not define the range for any single feature, but specifically for the entire population defined within the feature pattern. Value is to be specified as a ± number.
SD_{max}	Max standard deviation *[max std dev]*	The maximum allowable standard deviation of the entire feature pattern, calculated after inspection of 100% of features.

FIG. 4A

Symbol	Factor	Definition
USL	USL = T + t	The absolute maximum that any feature diameter can be within the population. Calculated from the nominal target plus the tolerance range.
LSL	LSL = T - t	The absolute minimum that any feature diameter can be within the population. Calculated from the nominal target minus the tolerance range.
UD_T	$UD_T = T + D_T$	The maximum that the feature population mean can be.
LD_T	$LD_T = T - D_T$	The minimum that the feature population mean can be.
μ	Population mean *[mean]*	This defines the actual population mean of the diameter for all features.
D_μ	$D_\mu = \mu - T$	The bounding window for the population mean. This does not define the range for any single feature, but specifically for the entire population defined within the feature pattern.

FIG. 4B

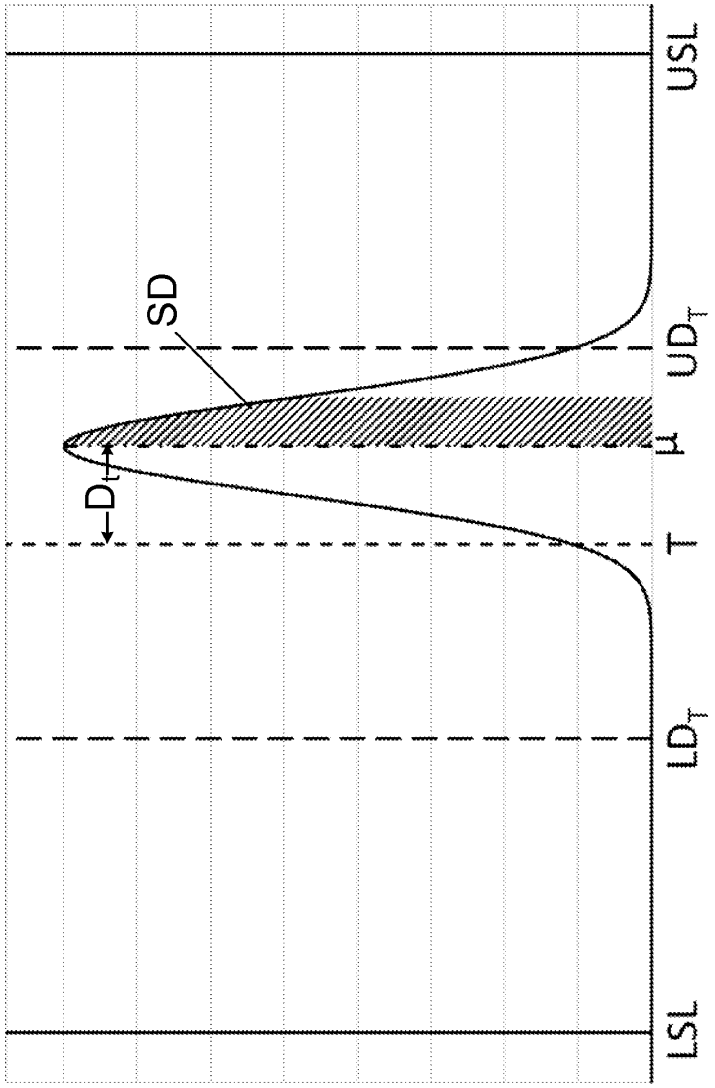

FIG. 4C

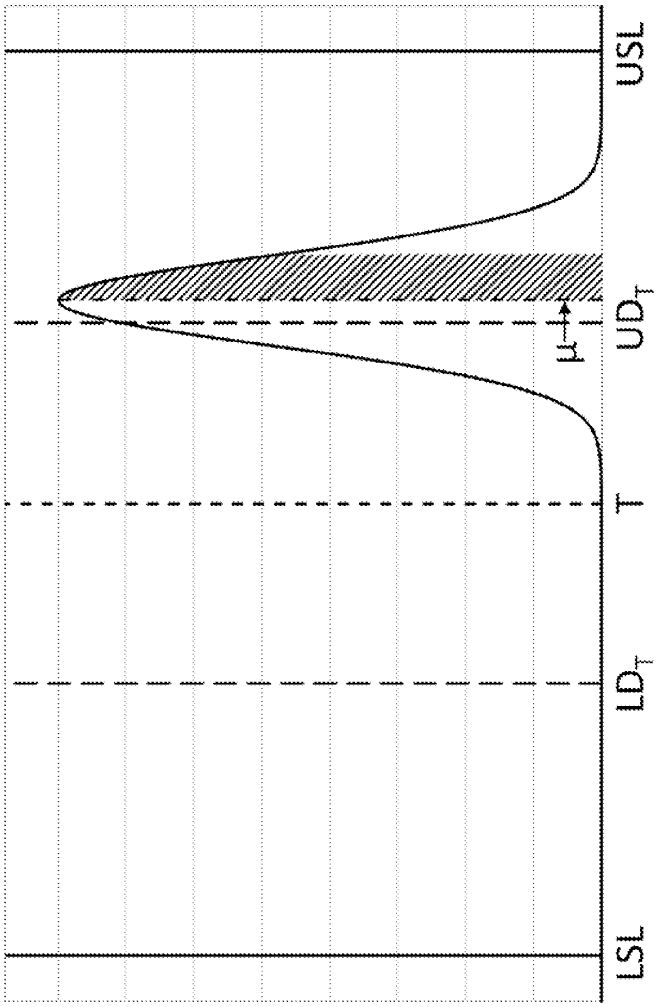

FIG. 4D

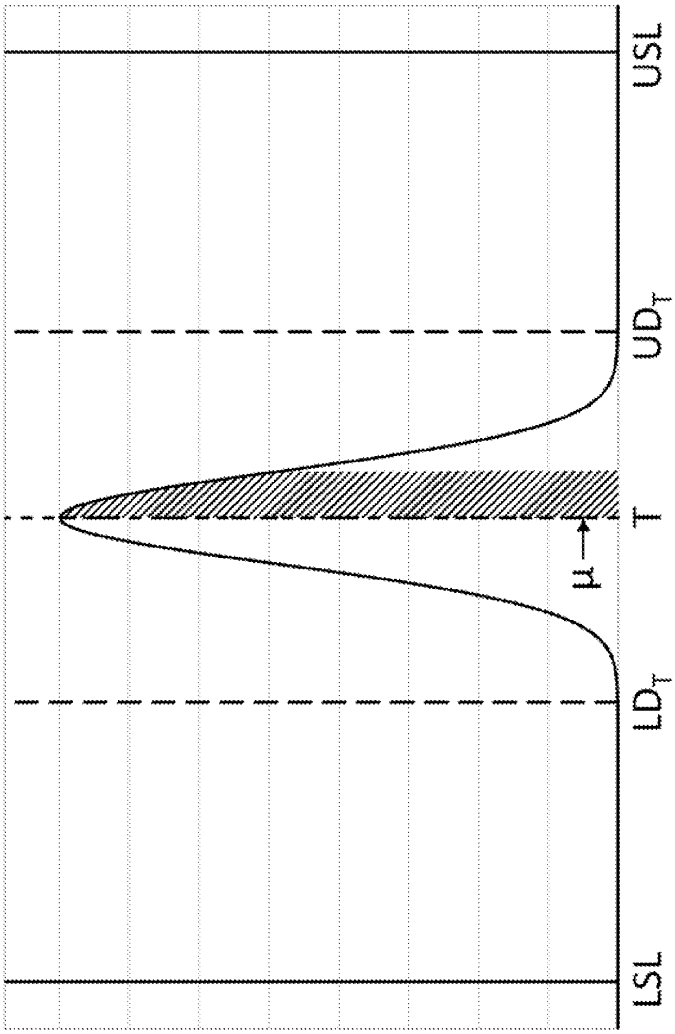

FIG. 4E

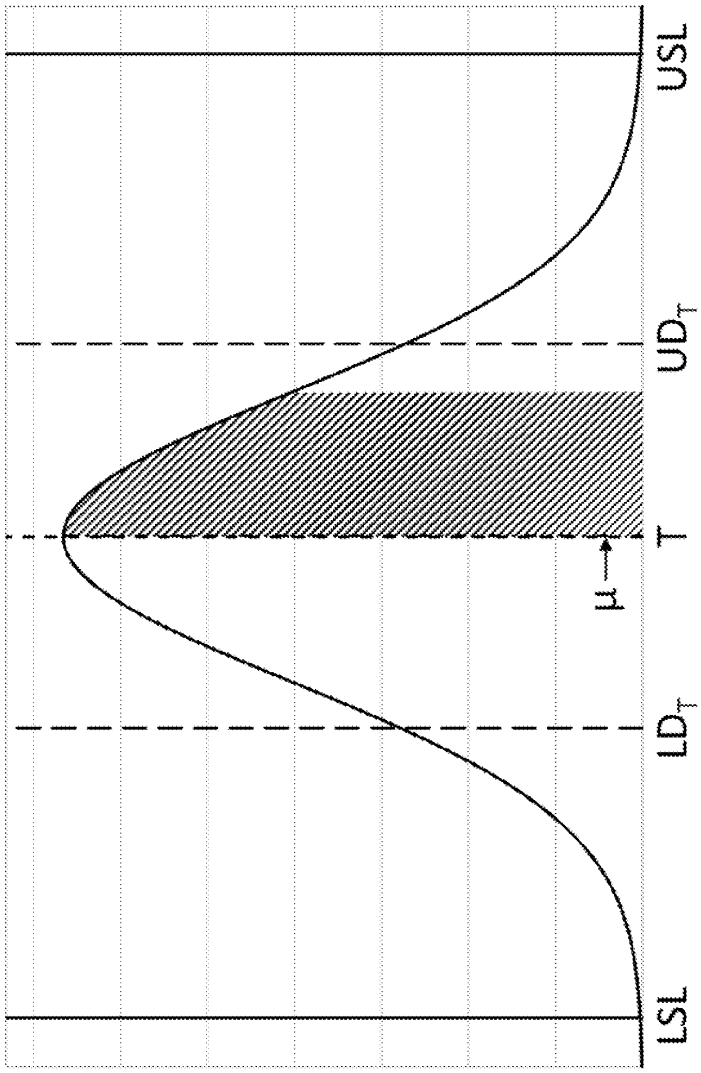

FIG. 4F

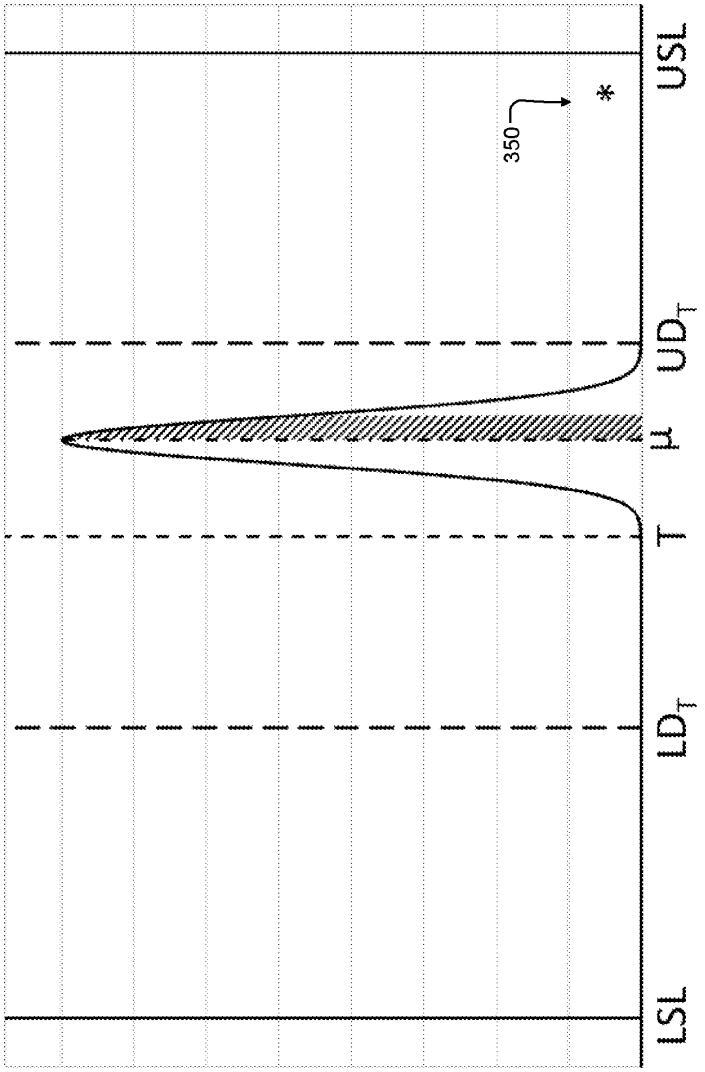

FIG. 4G

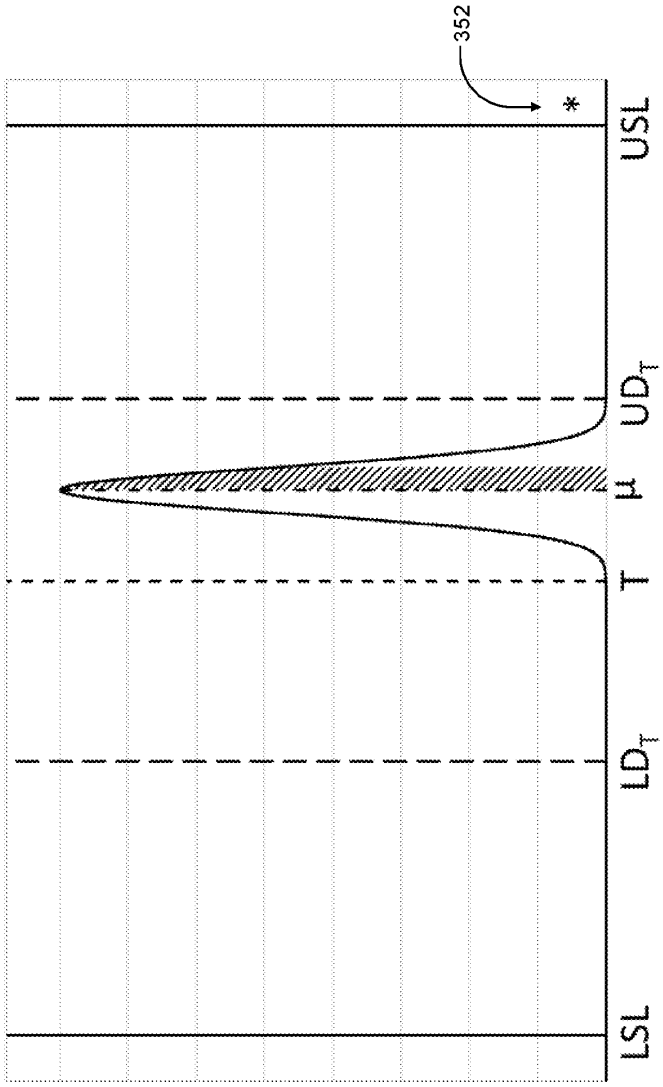

FIG. 4H

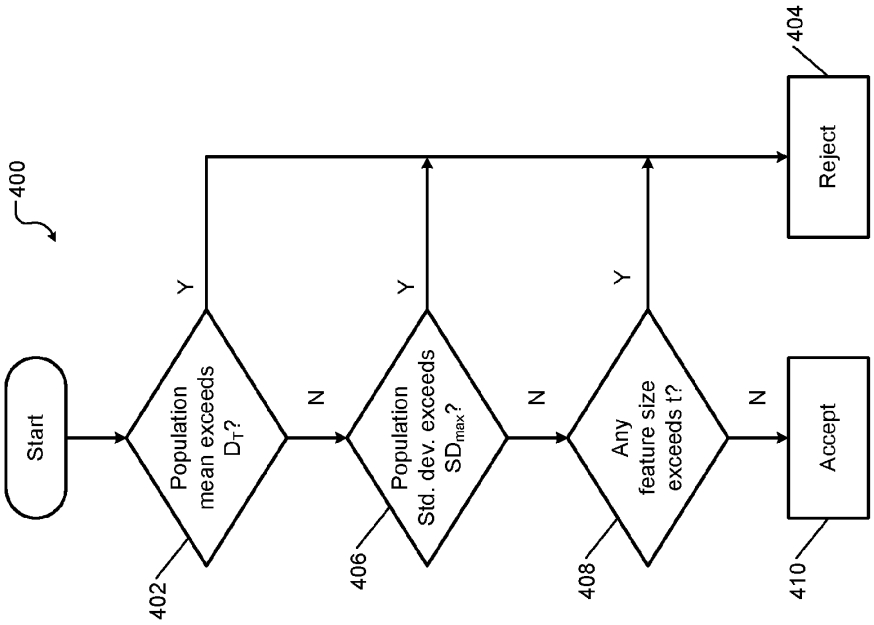
400
Start
Population mean exceeds D_T?
Y
N
402
Population Std. dev. exceeds SD_{max}?
Y
N
406
Any feature size exceeds t?
Y
N
408
Reject
404
Accept
410

FIG. 4I

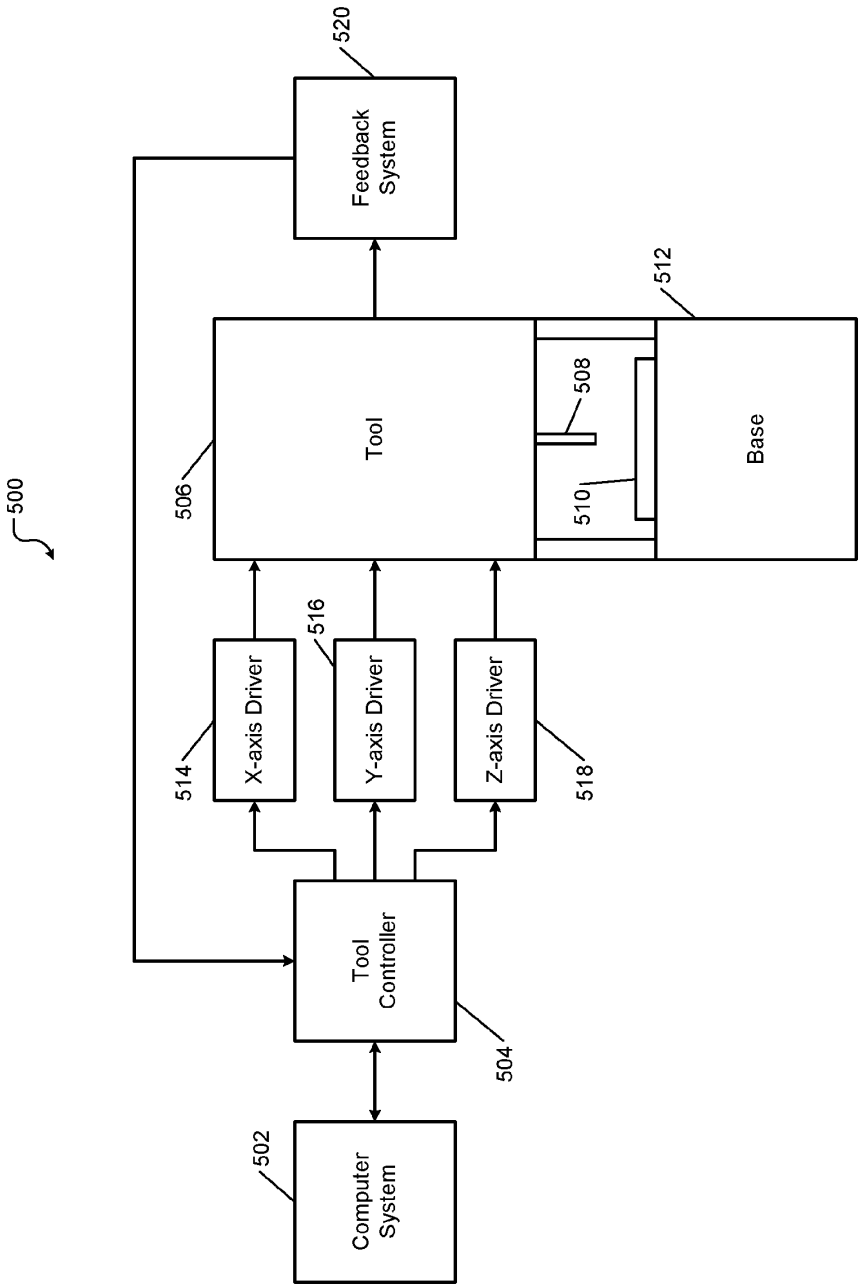
500
520
Feedback System
512
Tool
508
510
Base
506
516
514
X-axis Driver
Y-axis Driver
Z-axis Driver
518
Tool Controller
504
502
Computer System

FIG. 5

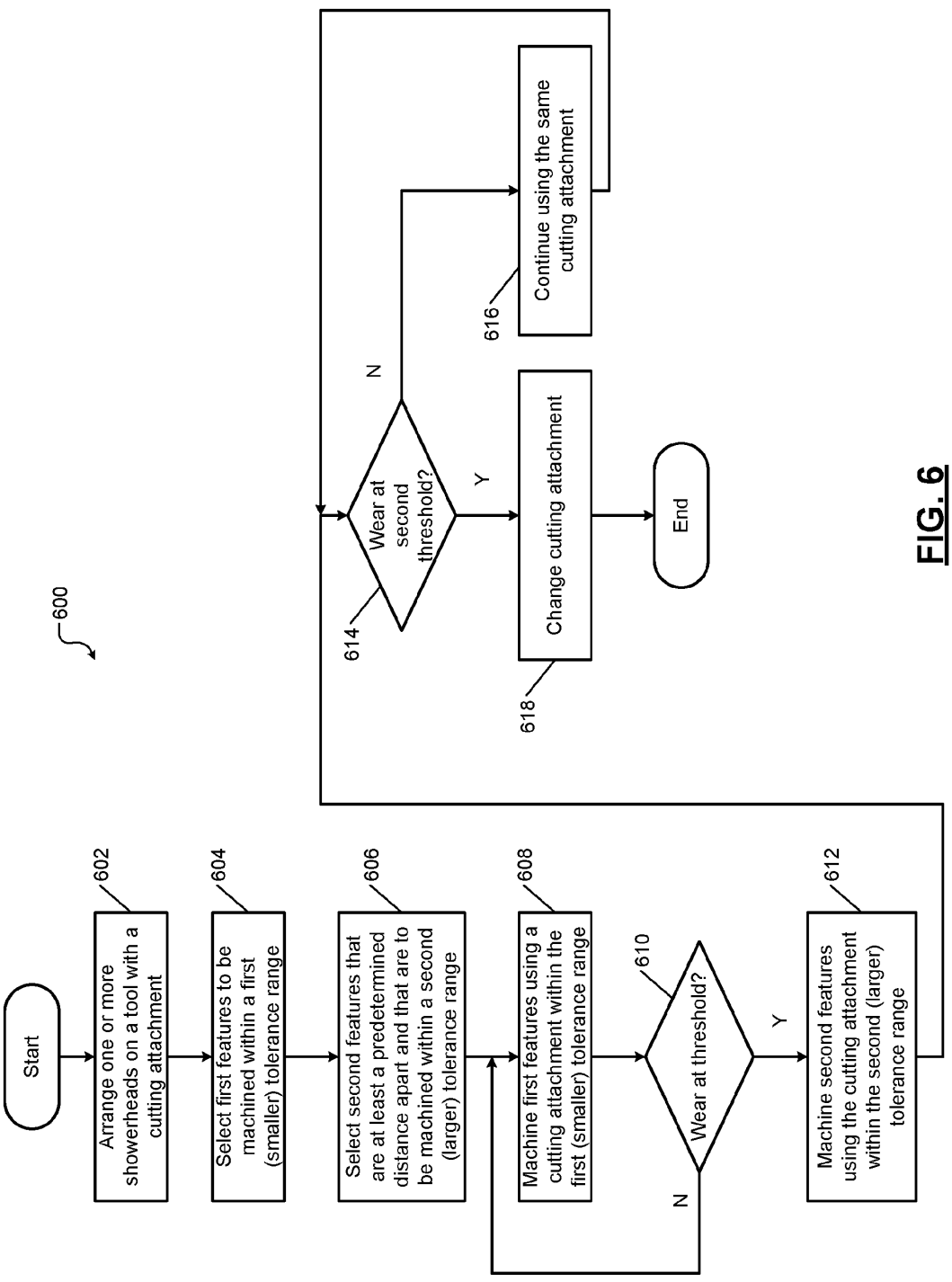
600
Start
Arrange one or more showerheads on a tool with a cutting attachment
602
Select first features to be machined within a first (smaller) tolerance range
604
Select second features that are at least a predetermined distance apart and that are to be machined within a second (larger) tolerance range
606
Machine first features using a cutting attachment within the first (smaller) tolerance range
608
Wear at threshold?
610
N
Y
Machine second features using the cutting attachment within the second (larger) tolerance range
612
Wear at second threshold?
614
N
Y
Continue using the same cutting attachment
616
Change cutting attachment
618
End

FIG. 6

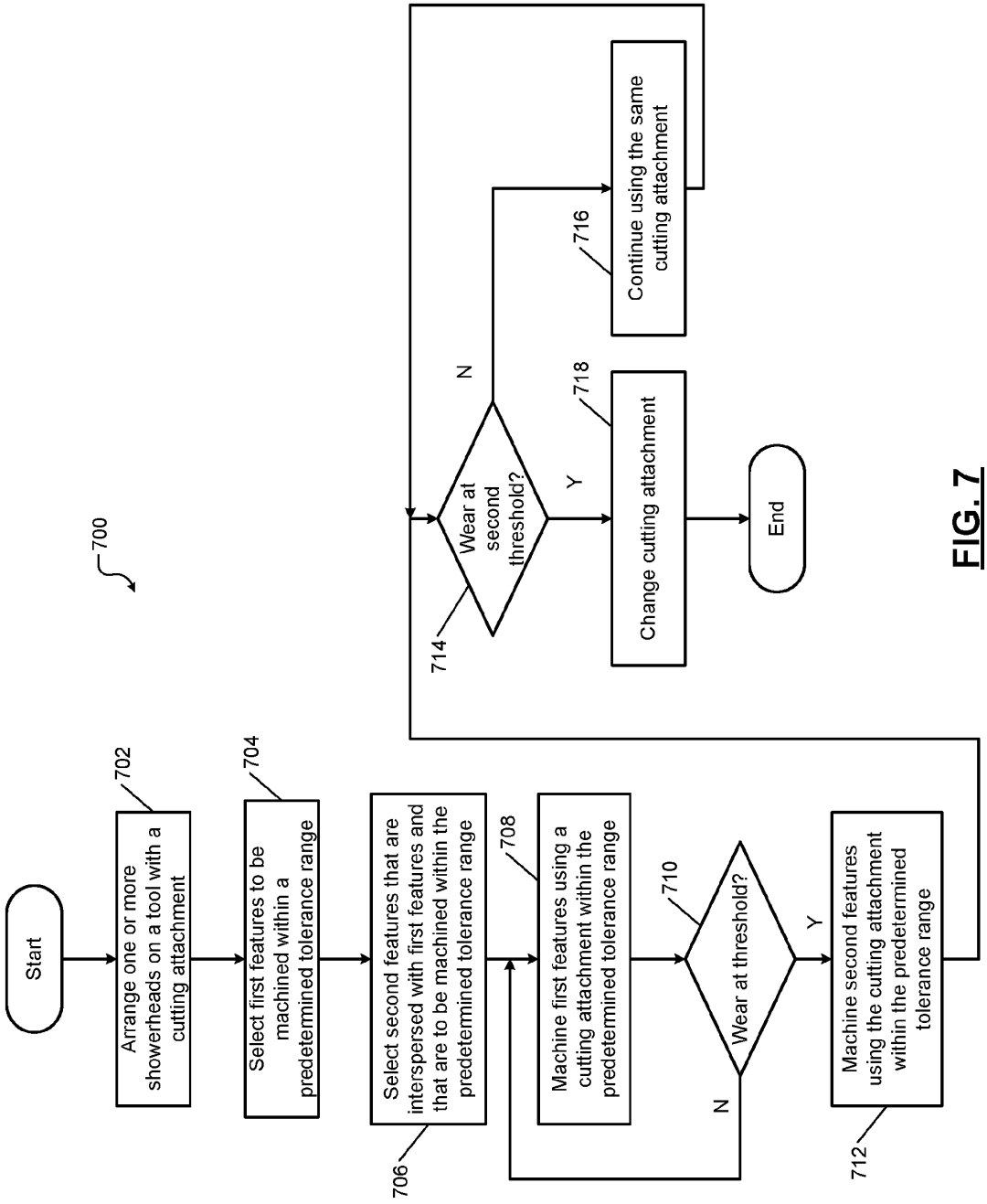
700
Start
Arrange one or more showerheads on a tool with a cutting attachment
702
Select first features to be machined within a predetermined tolerance range
704
Select second features that are interspersed with first features and that are to be machined within the predetermined tolerance range
706
708
Machine first features using a cutting attachment within the predetermined tolerance range
710
Wear at threshold?
N
Y
Machine second features using the cutting attachment within the predetermined tolerance range
712
Wear at second threshold?
714
N
Y
716
Continue using the same cutting attachment
718
Change cutting attachment
End

FIG. 7