(12) INTERNATIONAL APPLICATION PUBLISHED UNDER THE PATENT COOPERATION TREATY (PCT)

(19) World Intellectual Property Organization
International Bureau

(43) International Publication Date
18 November 2010 (18.11.2010)

PCT

(10) International Publication Number
WO 2010/132751 A1

(51) International Patent Classification:
A61M 5/00 (2006.01)

(21) International Application Number:
PCT/US2010/034873

(22) International Filing Date:
14 May 2010 (14.05.2010)

(25) Filing Language: English

(26) Publication Language: English

(30) Priority Data:
61/178,882 15 May 2009 (15.05.2009) US

(71) Applicant *(for all designated States except US)*: **ISCIENCE INTERVENTIONAL CORPORATION** [US/US]; 4055 Campbell Avenue, Menlo Park, California 94025 (US).

(72) Inventors; and

(75) Inventors/Applicants *(for US only)*: **CONSTON, Stanley, R.** [US/US]; 148 Rogers Avenue, San Carlos, California 94070 (US). **YAMAMOTO, Ronald** [US/US]; 1321 Waller Street, San Francisco, California 94117 (US).

(74) Agents: **SUYAT, Reginald, J.** et al.; Weaver Austin Villeneuve & Sampson LLP, P. O. Box 70250, Oakland, California 94612-0250 (US).

(81) Designated States *(unless otherwise indicated, for every kind of national protection available)*: AE, AG, AL, AM, AO, AT, AU, AZ, BA, BB, BG, BH, BR, BW, BY, BZ, CA, CH, CL, CN, CO, CR, CU, CZ, DE, DK, DM, DO, DZ, EC, EE, EG, ES, FI, GB, GD, GE, GH, GM, GT, HN, HR, HU, ID, IL, IN, IS, JP, KE, KG, KM, KN, KP, KR, KZ, LA, LC, LK, LR, LS, LT, LU, LY, MA, MD, ME, MG, MK, MN, MW, MX, MY, MZ, NA, NG, NI, NO, NZ, OM, PE, PG, PH, PL, PT, RO, RS, RU, SC, SD, SE, SG, SK, SL, SM, ST, SV, SY, TH, TJ, TM, TN, TR, TT, TZ, UA, UG, US, UZ, VC, VN, ZA, ZM, ZW.

(84) Designated States *(unless otherwise indicated, for every kind of regional protection available)*: ARIPO (BW, GH, GM, KE, LR, LS, MW, MZ, NA, SD, SL, SZ, TZ, UG, ZM, ZW), Eurasian (AM, AZ, BY, KG, KZ, MD, RU, TJ, TM), European (AL, AT, BE, BG, CH, CY, CZ, DE, DK, EE, ES, FI, FR, GB, GR, HR, HU, IE, IS, IT, LT, LU, LV, MC, MK, MT, NL, NO, PL, PT, RO, SE, SI, SK, SM, TR), OAPI (BF, BJ, CF, CG, CI, CM, GA, GN, GQ, GW, ML, MR, NE, SN, TD, TG).

Published:

— *with international search report (Art. 21(3))*

(54) **Title**: METHODS AND APPARATUS FOR SUB-RETINAL CATHETERIZATION

FIGURE 5

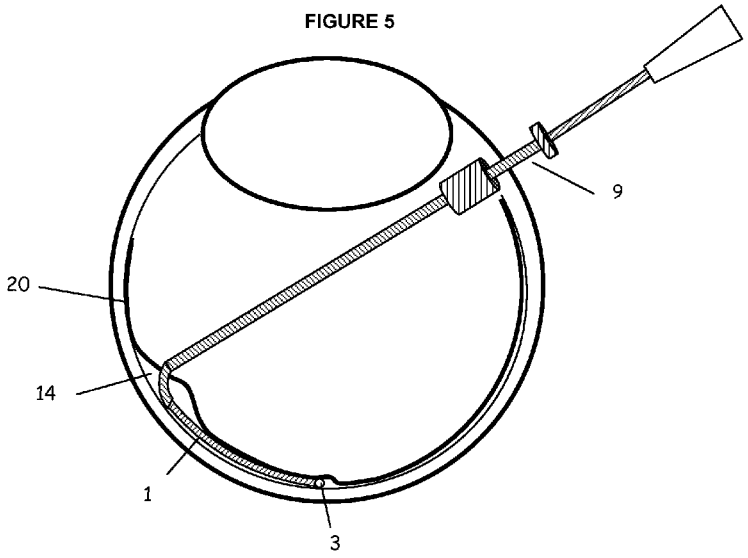

(57) **Abstract**: Devices and methods are provided for access to the sub-retinal space that lies between the retina and the choroid in order to introduce therapies to the retina and more specifically to the sensory retina and RPE, particularly in the region of the macula. The devices comprise a catheter that incorporates advantageous size, flexibility and tip features to properly, accurately and atraumatically access the sub-retinal space. Ancillary devices to assist in placing catheters into the sub-retinal space are also provided. The catheter devices incorporate a lumen for delivery of therapeutic substances or devices into the eye.

WO 2010/132751 A1