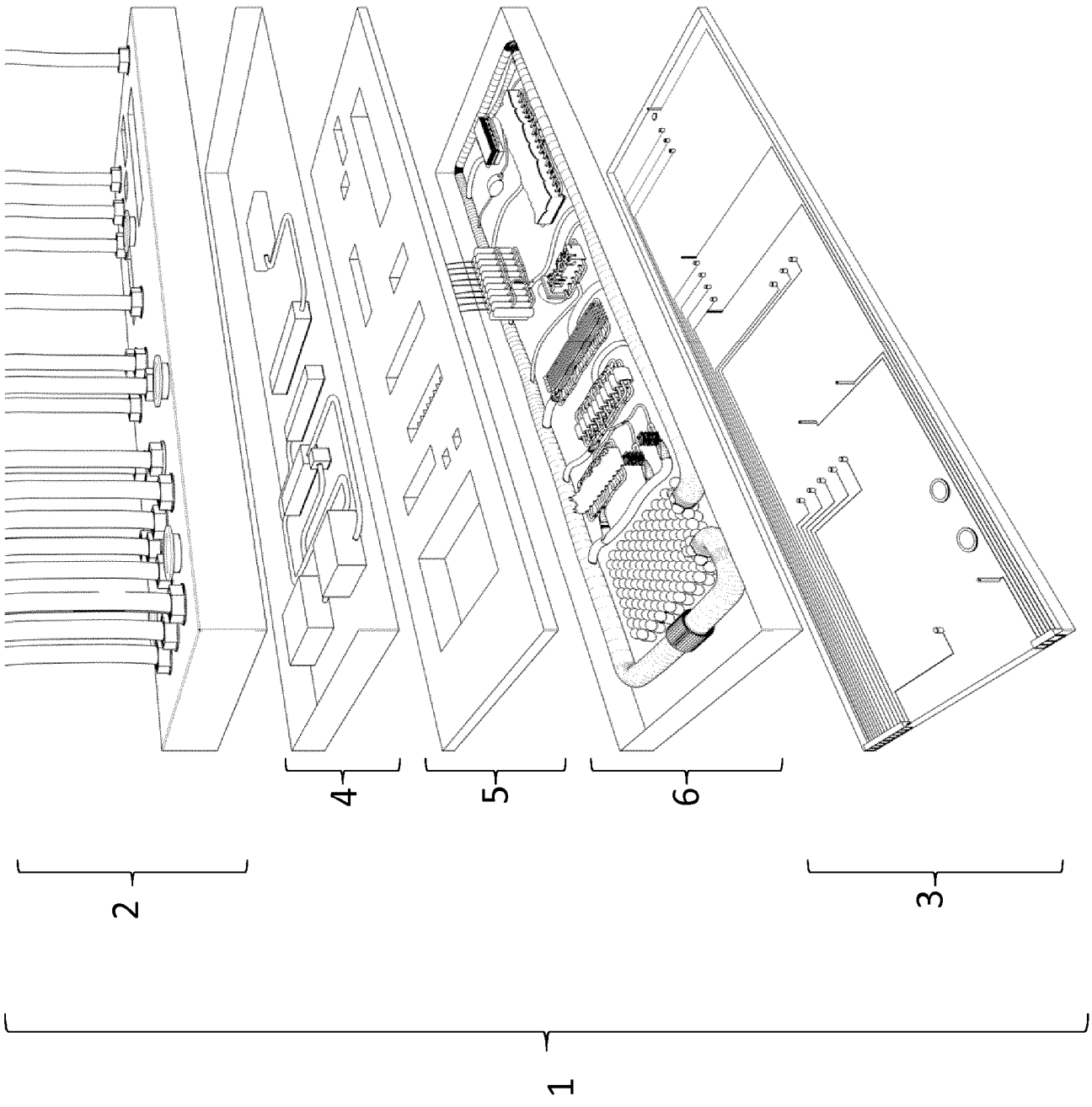

Figure 1

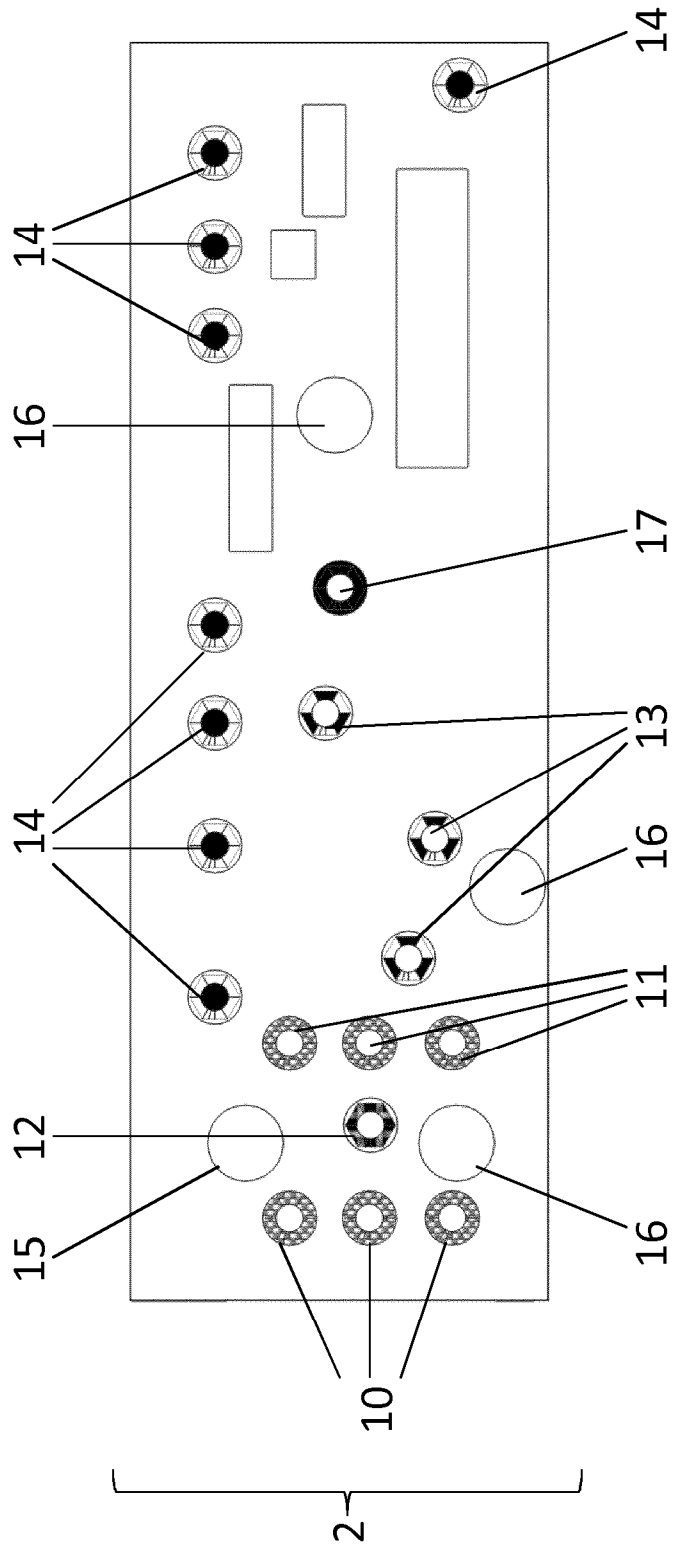

Figure 2

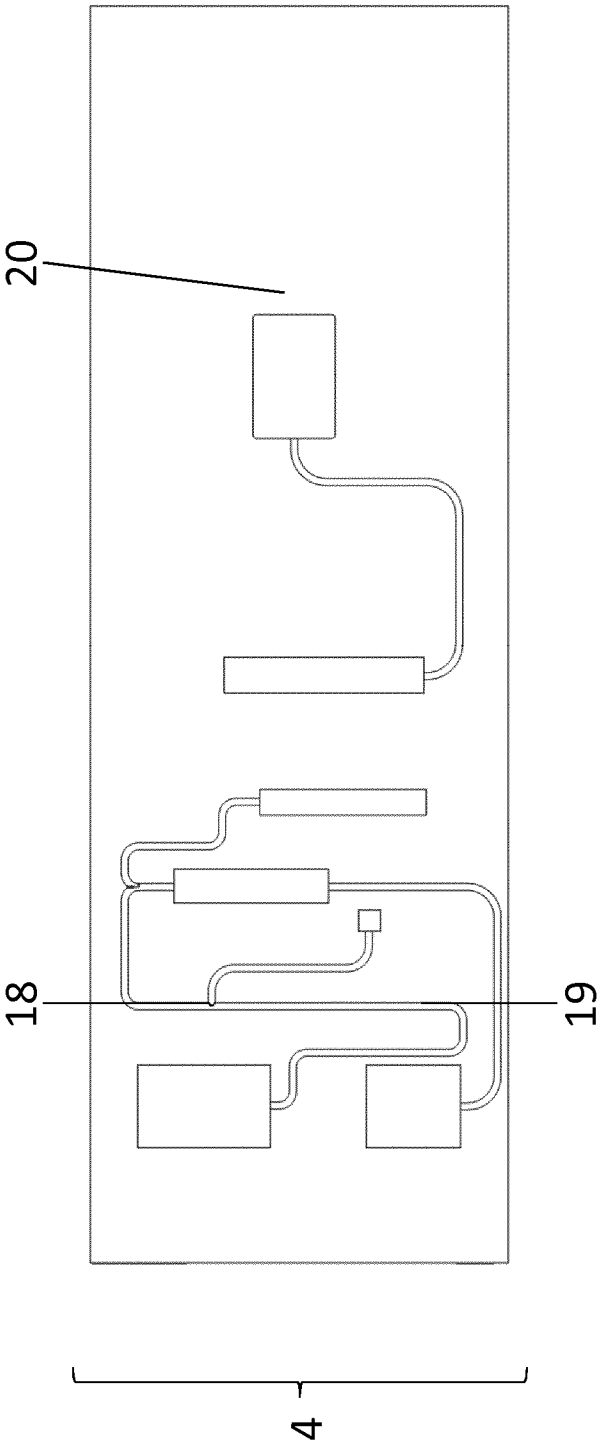

Figure 3

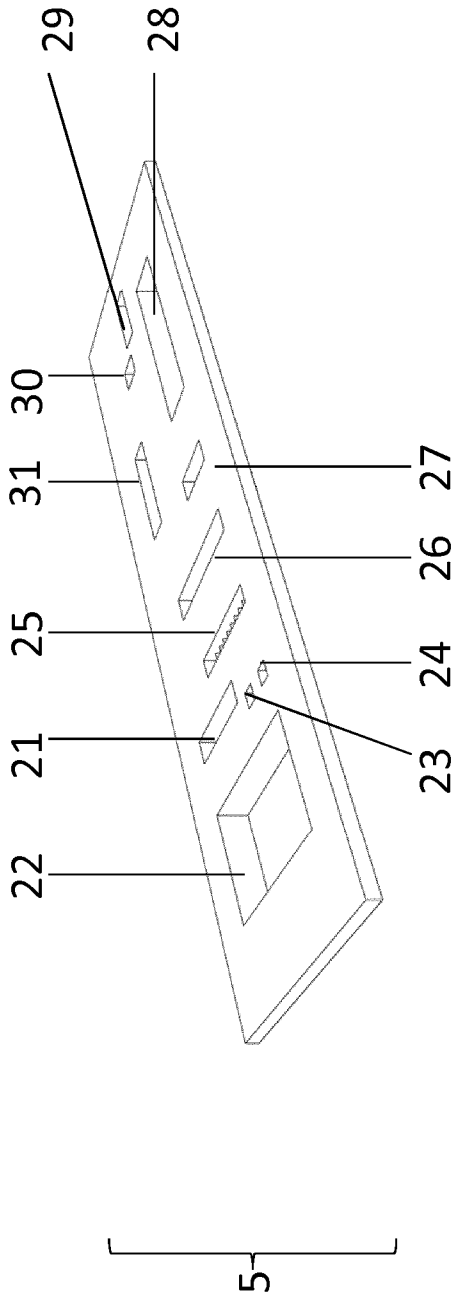

Figure 4

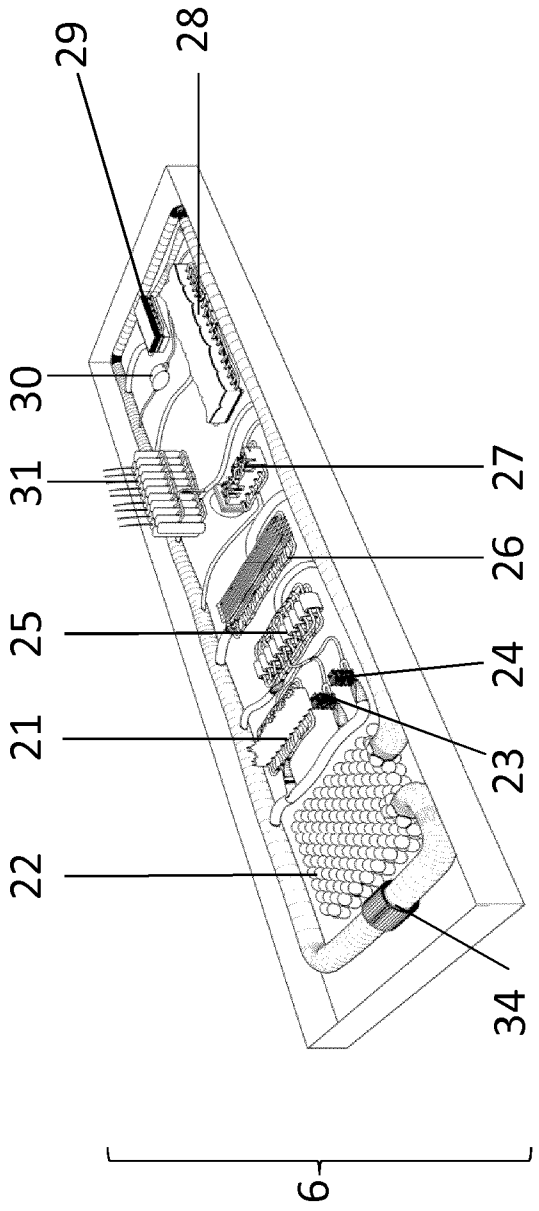

Figure 5

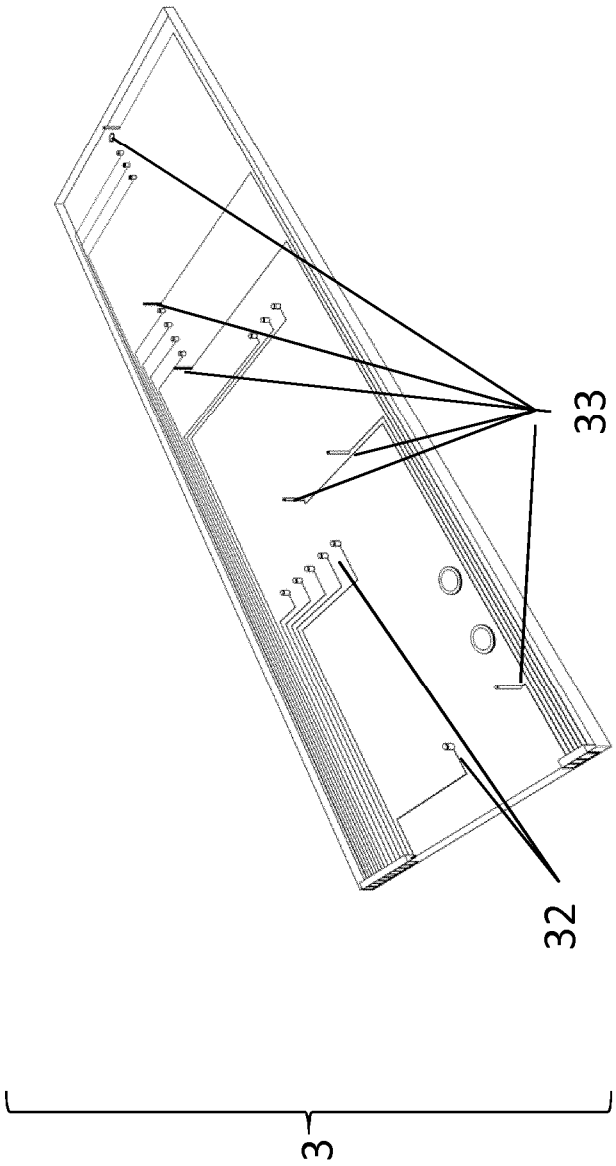

Figure 6

a)

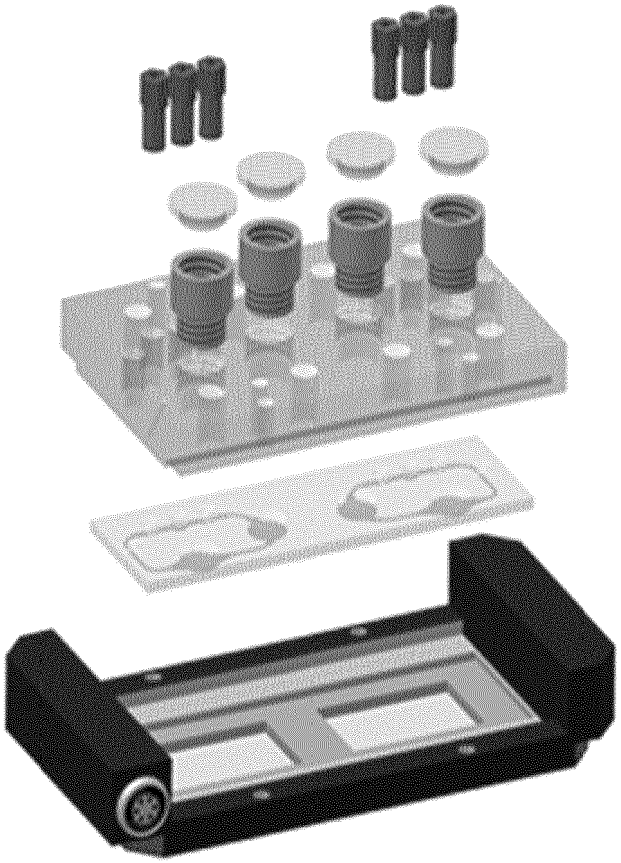

b)

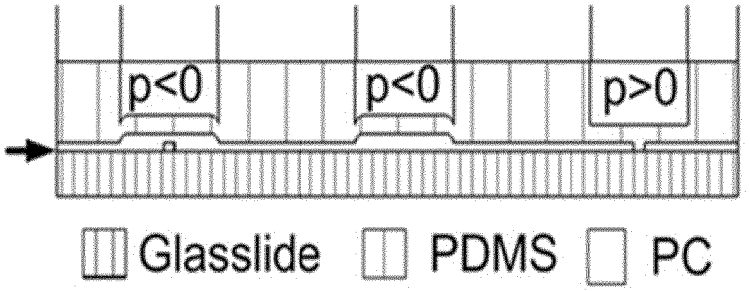
p<0
p<0
p>0
Glasslide
PDMS
PC

c)

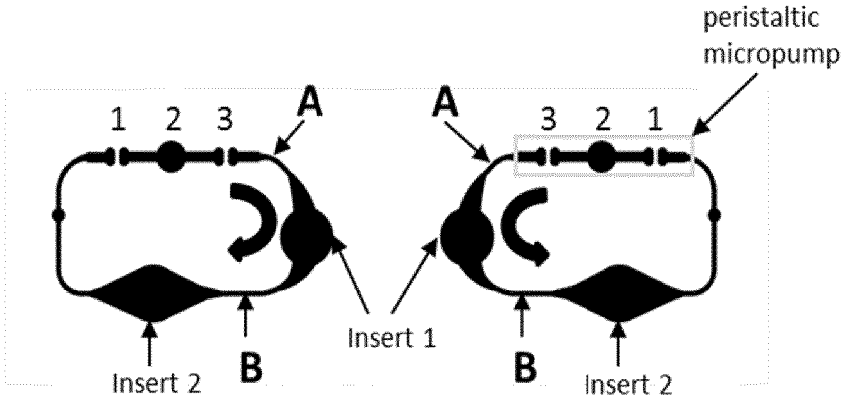
peristaltic
micropump
1 2 3
A
A
3 2 1
Insert 2
B
Insert 1
B
Insert 2

Figure 7

Figure 8 a)

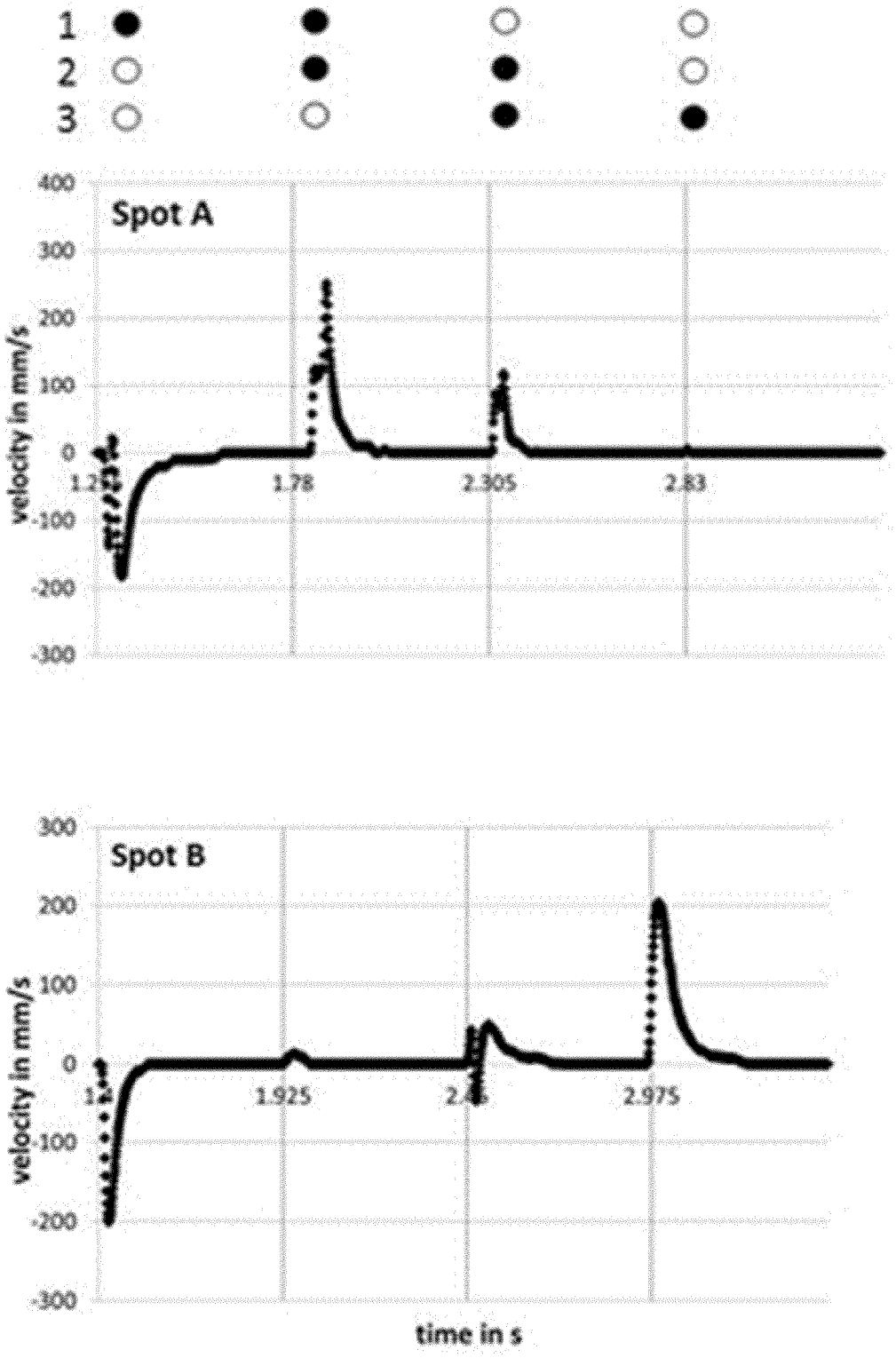
1
2
3
Spot A
400
300
200
100
0
-100
-200
-300
velocity in mm/s
1.78
2.305
2.83
Spot B
300
200
100
0
-100
-200
-300
velocity in mm/s
1.925
2.975
time in s

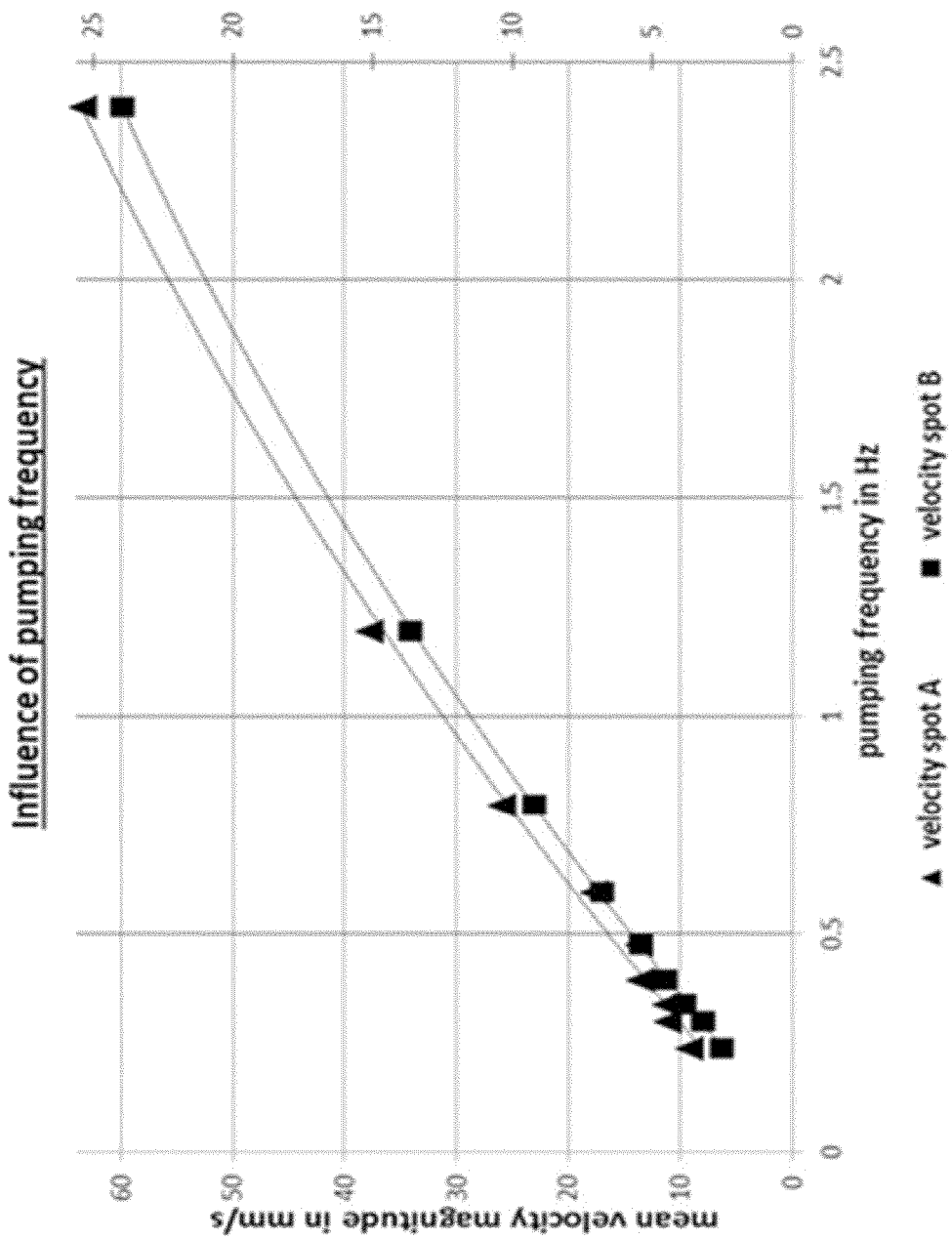
Influence of pumping frequency
mean velocity magnitude in mm/s
0
10
20
30
40
50
60
0
5
10
15
20
25
0
0.5
1
1.5
2
2.5
pumping frequency in Hz
velocity spot A
velocity spot B

Figure 8 b)