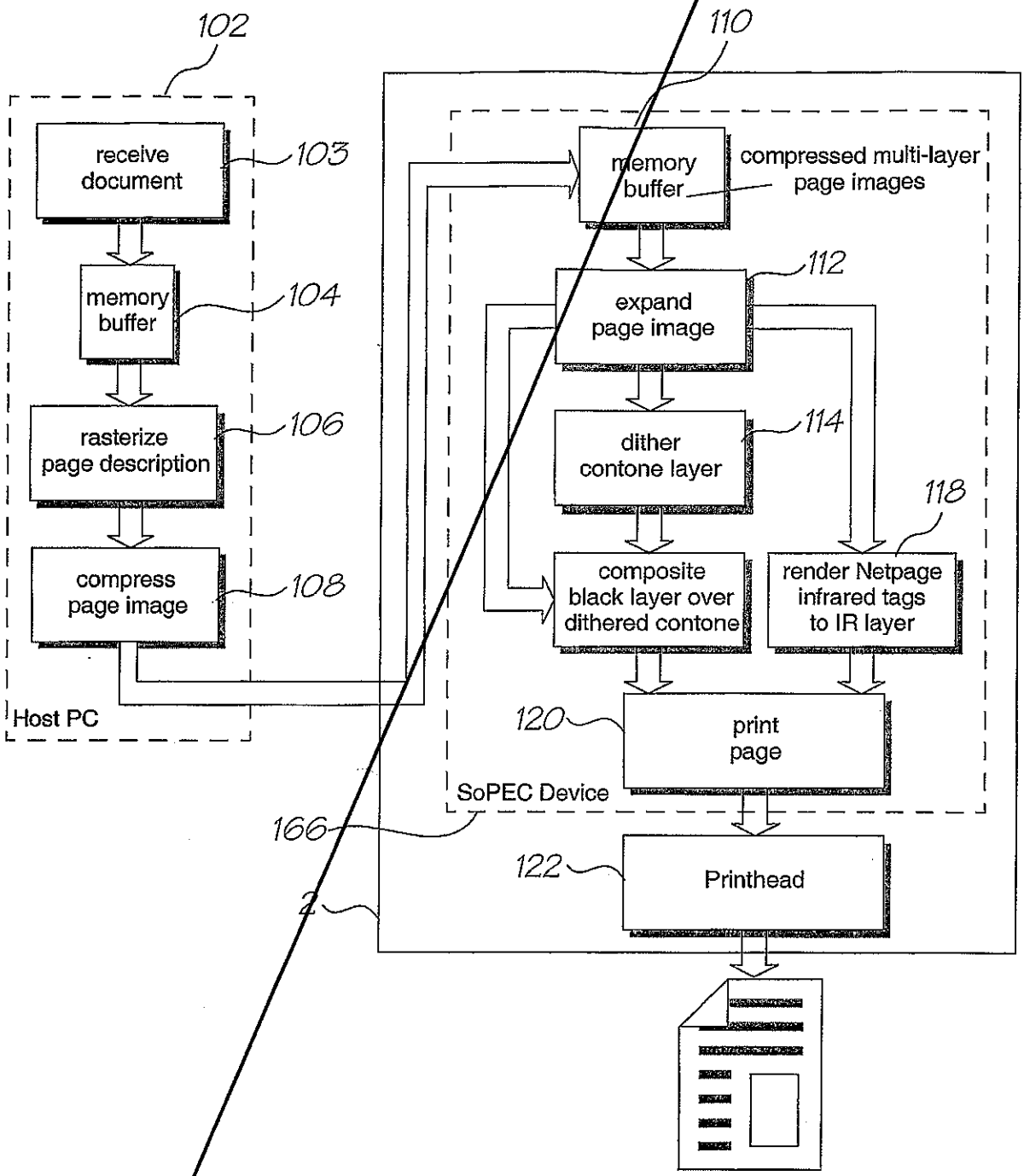
102
receive document
103
memory buffer
104
rasterize page description
106
compress page image
108
Host PC
110
memory buffer
compressed multi-layer page images
112
expand page image
114
dither contone layer
118
composite black layer over dithered contone
render Netpage infrared tags to IR layer
120
print page
SoPEC Device
166
122
Printhead
2

FIG. 1

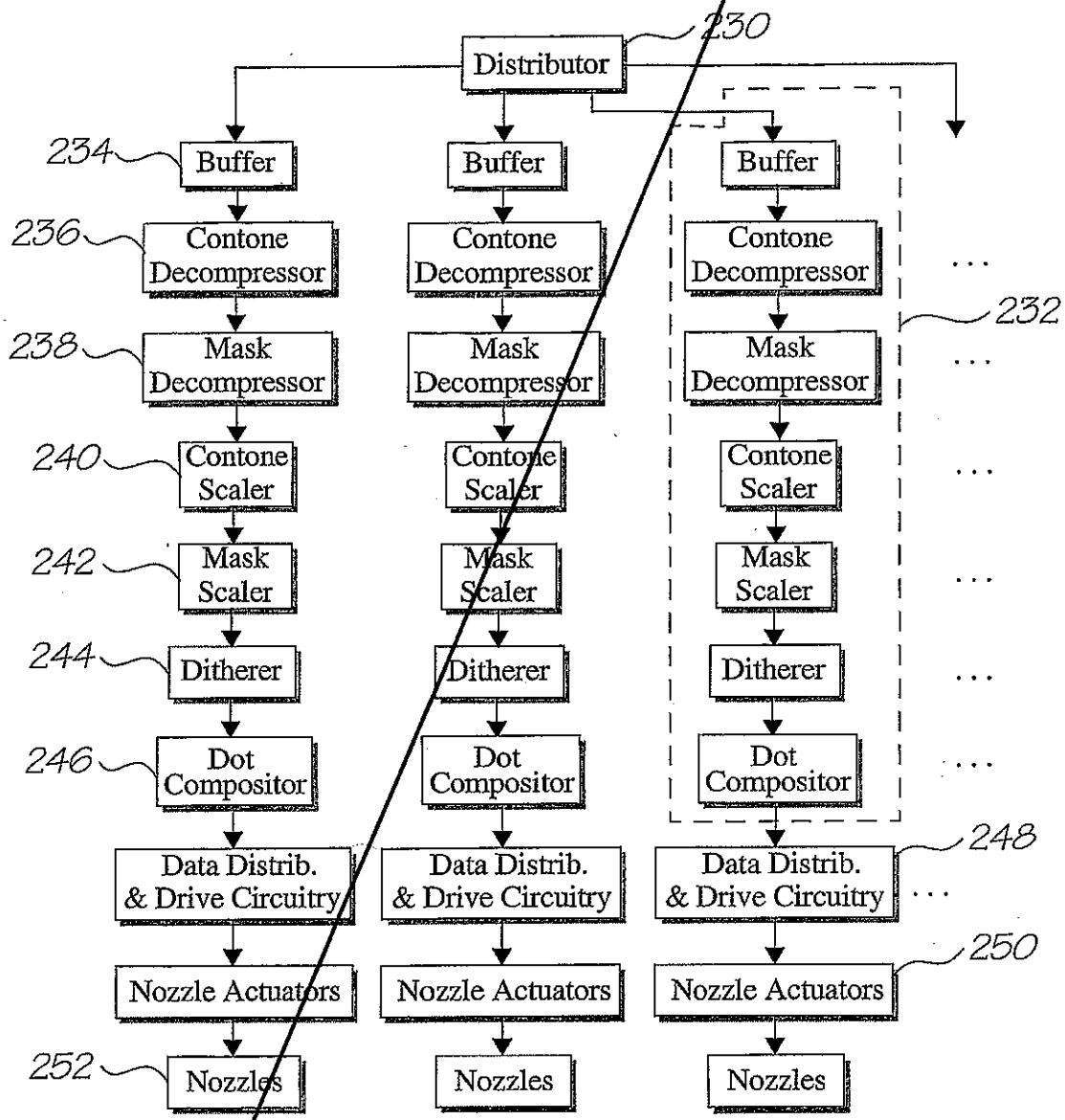
230
Distributor
234
Buffer
Buffer
Buffer
236
Contone Decompressor
Contone Decompressor
Contone Decompressor
232
238
Mask Decompressor
Mask Decompressor
Mask Decompressor
240
Contone Scaler
Contone Scaler
Contone Scaler
242
Mask Scaler
Mask Scaler
Mask Scaler
244
Ditherer
Ditherer
Ditherer
246
Dot Compositor
Dot Compositor
Dot Compositor
248
Data Distrib. & Drive Circuitry
Data Distrib. & Drive Circuitry
Data Distrib. & Drive Circuitry
250
Nozzle Actuators
Nozzle Actuators
Nozzle Actuators
252
Nozzles
Nozzles
Nozzles

FIG. 2

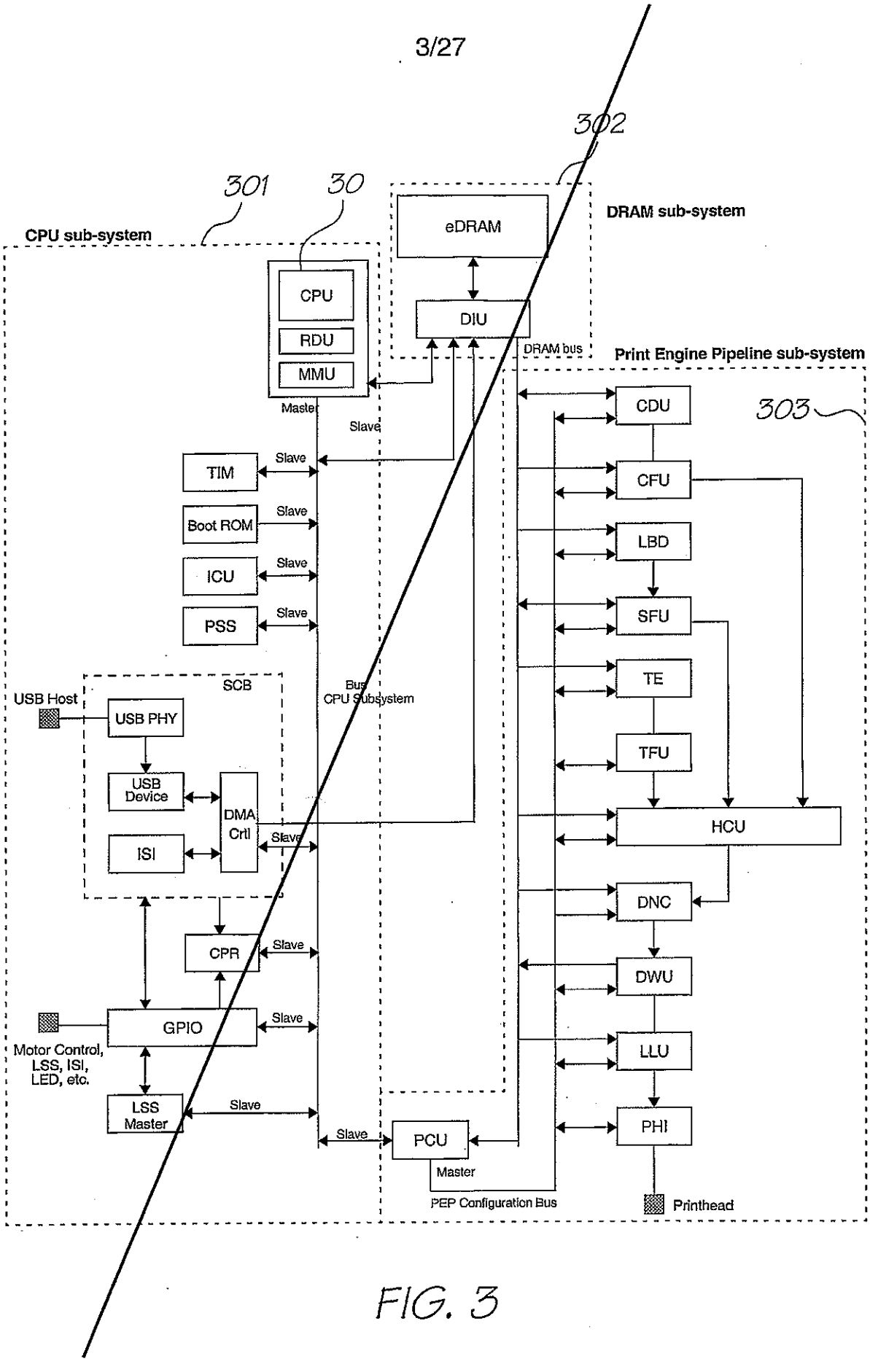
302
301
30
CPU sub-system
DRAM sub-system
eDRAM
CPU
RDU
MMU
DIU
DRAM bus
Print Engine Pipeline sub-system
303
Master
Slave
TIM
Boot ROM
ICU
PSS
CDU
CFU
LBD
SFU
TE
TFU
HCU
DNC
DWU
LLU
PHI
SCB
USB Host
USB PHY
USB Device
ISI
DMA Ctrl
Bus
CPU Subsystem
CPR
GPIO
Motor Control, LSS, ISI, LED, etc.
LSS Master
PCU
Master
PEP Configuration Bus
Printhead

FIG. 3

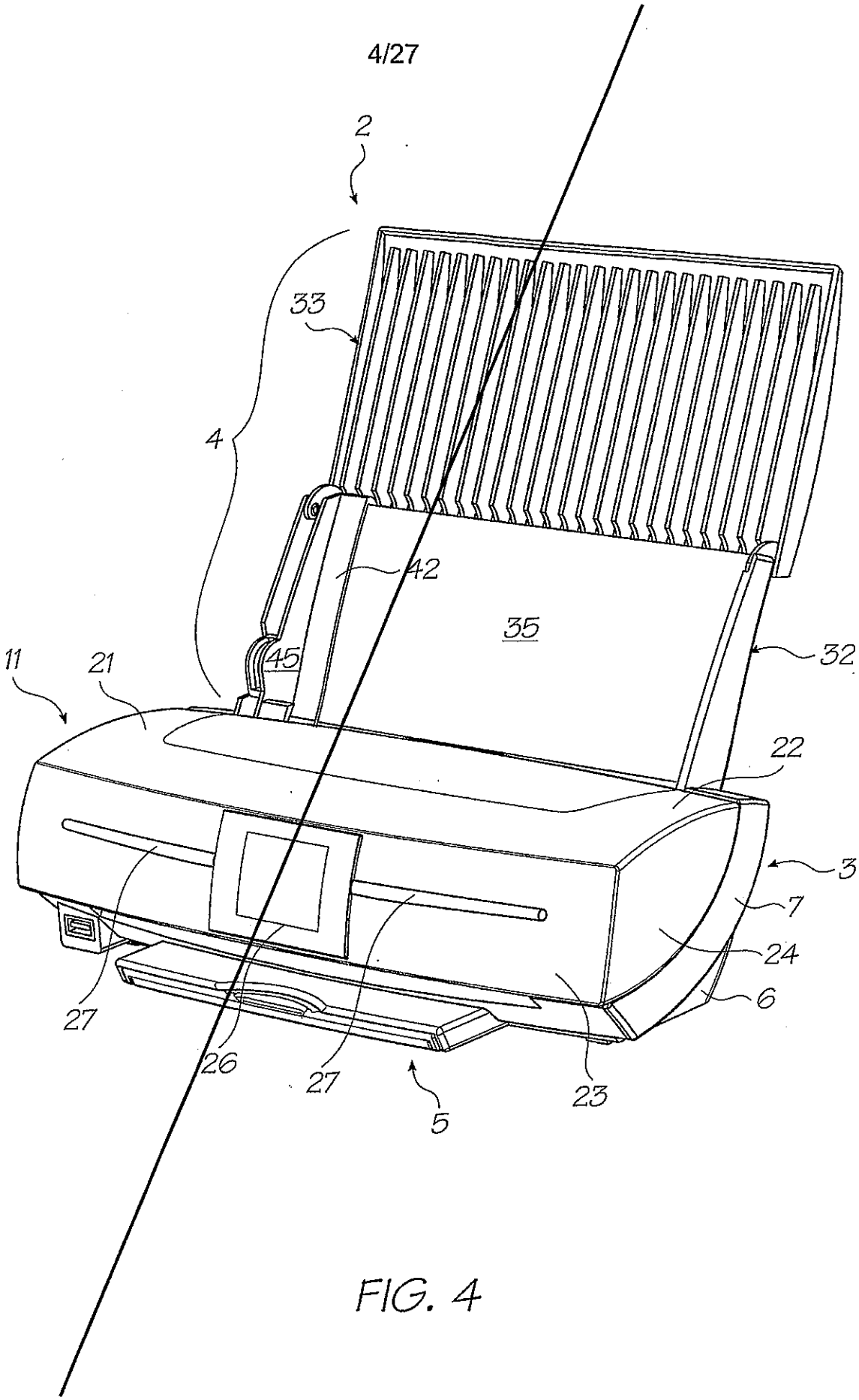

FIG. 4

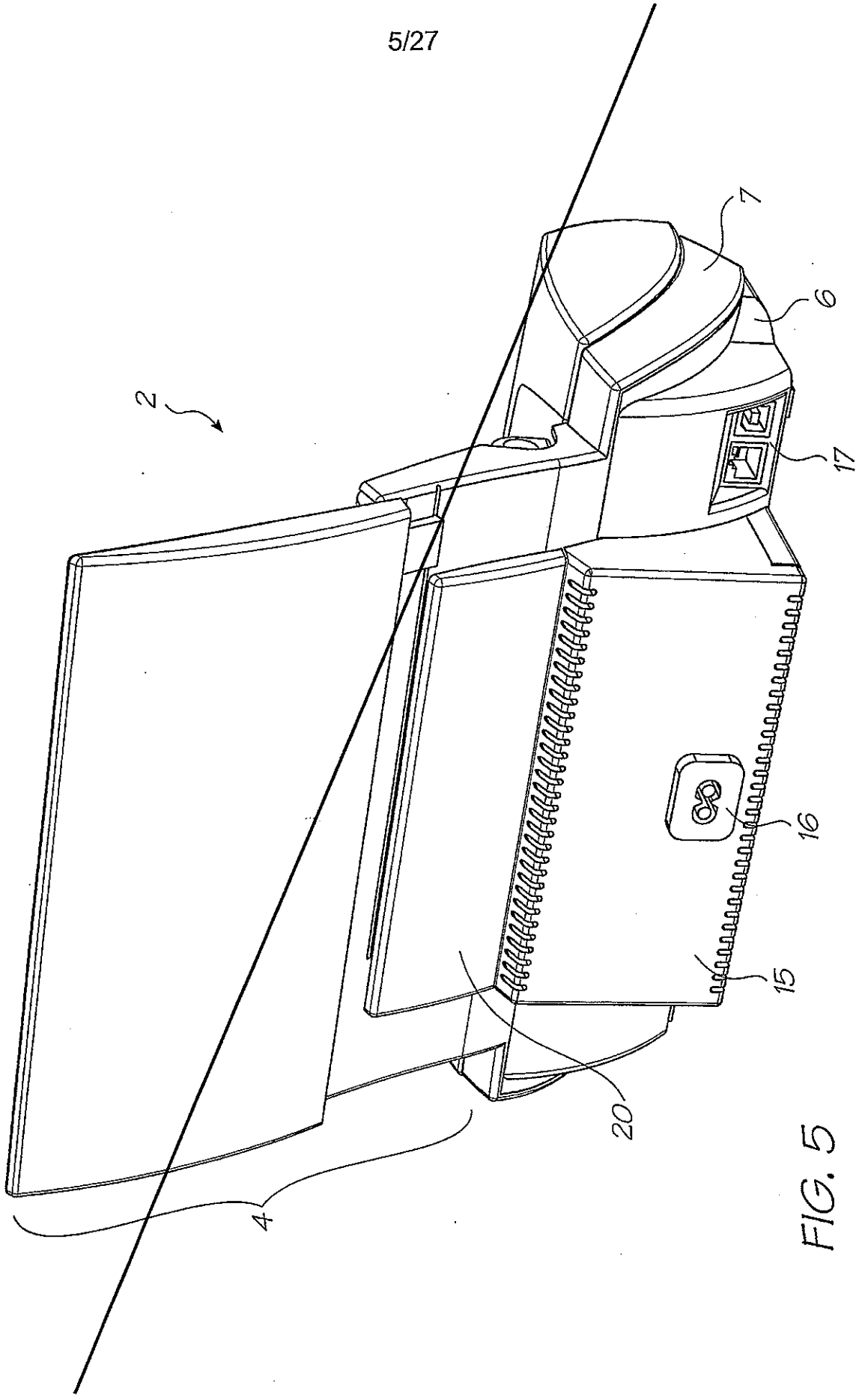

FIG. 5

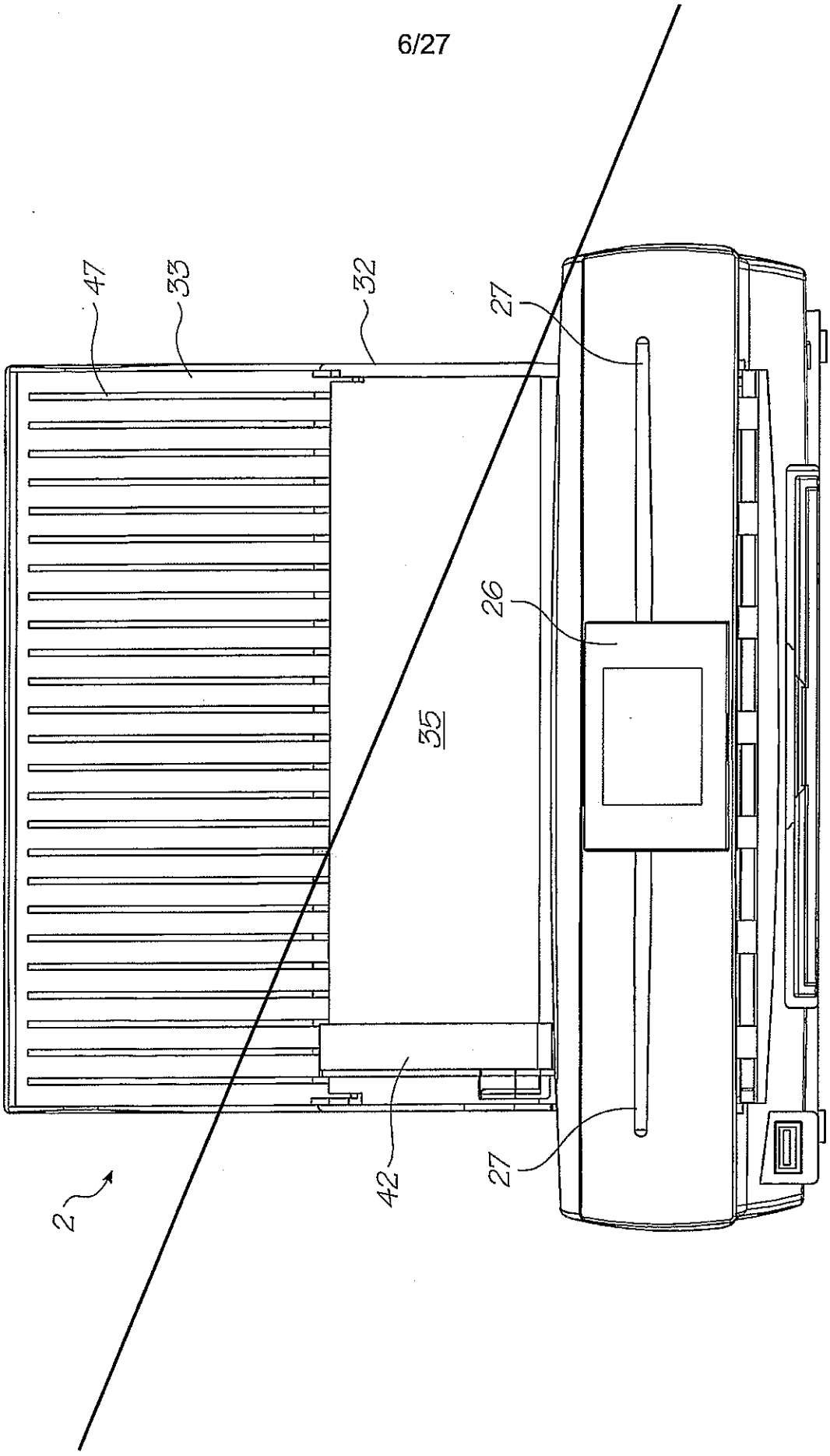

FIG. 6

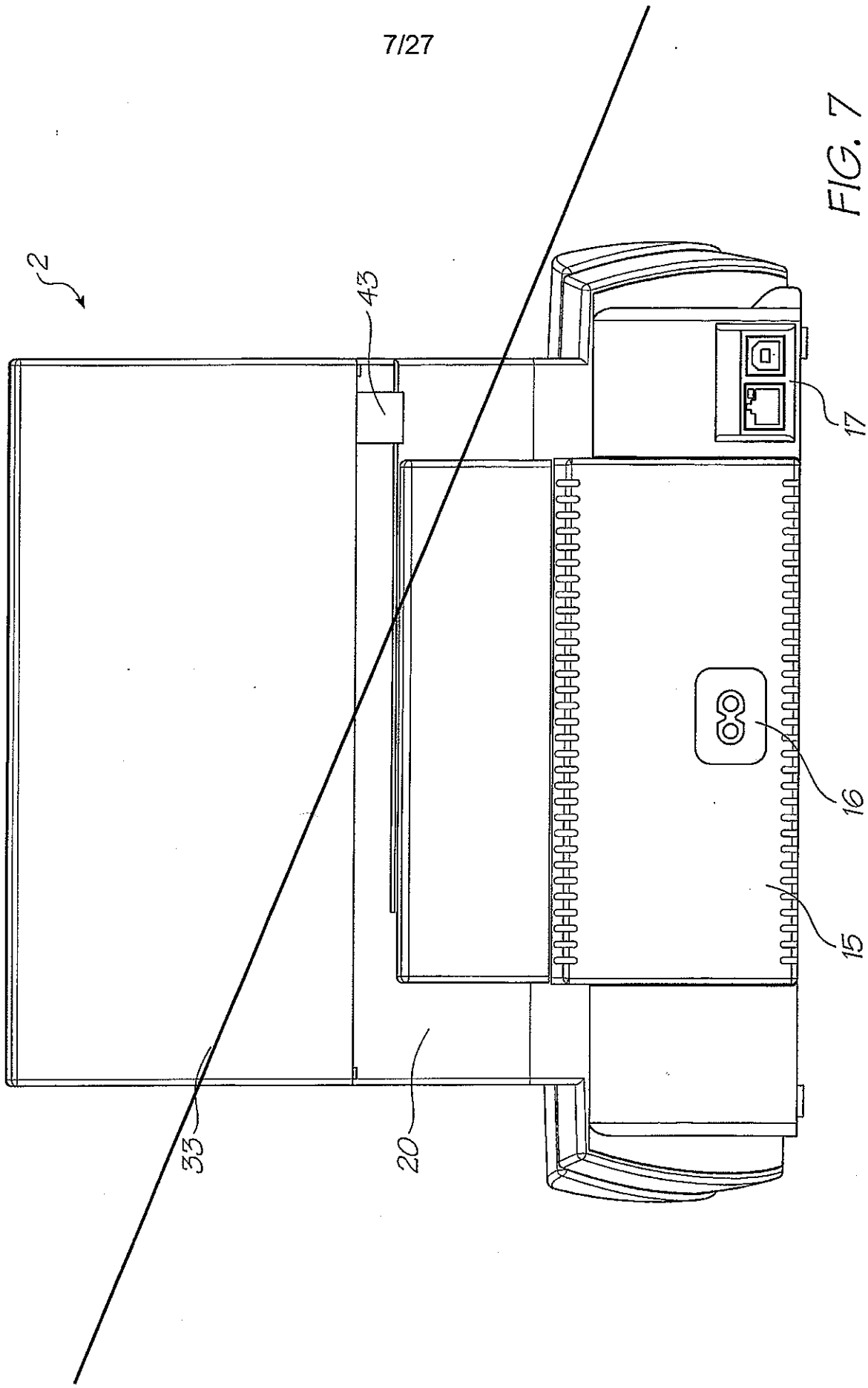

FIG. 7

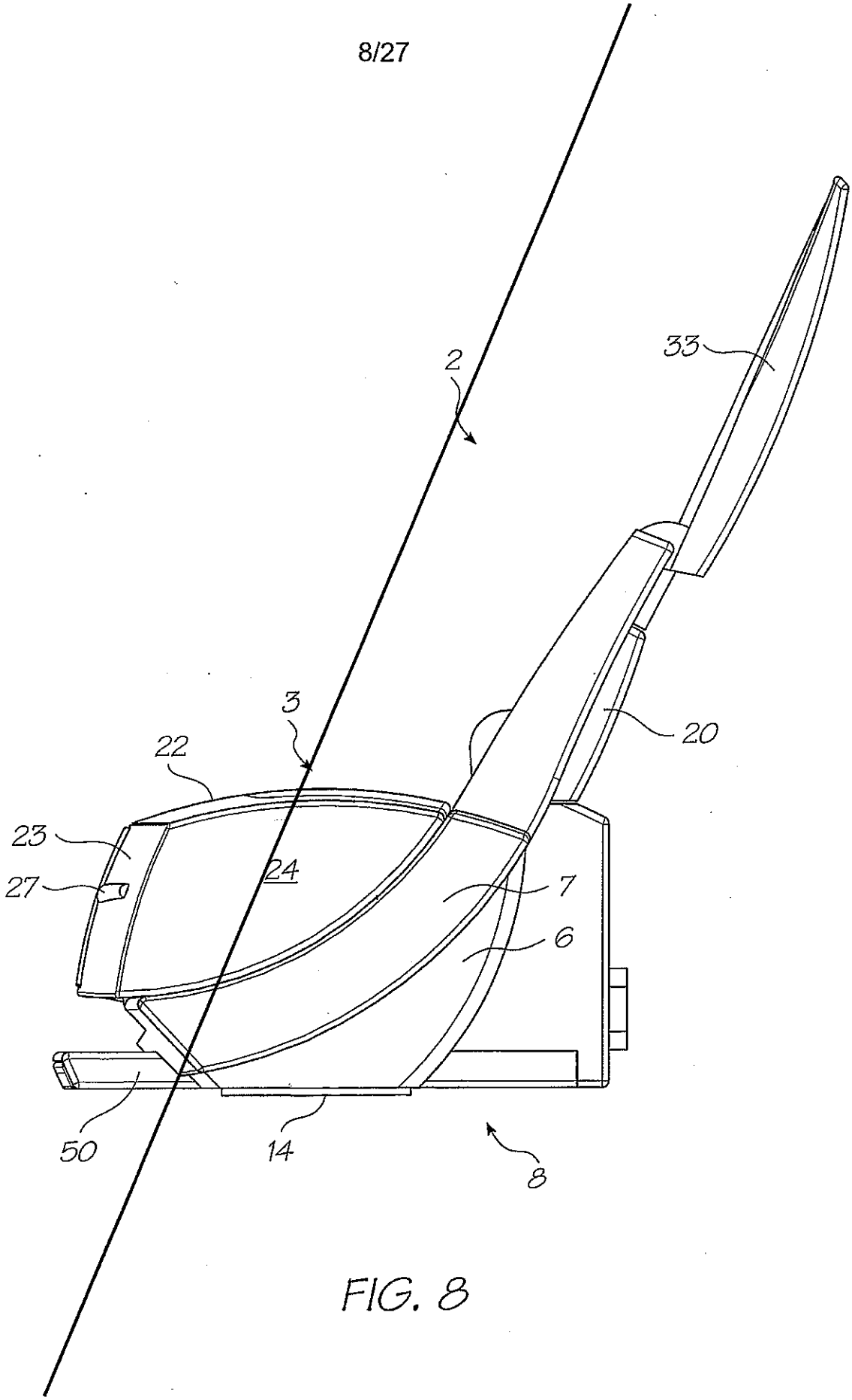

FIG. 8

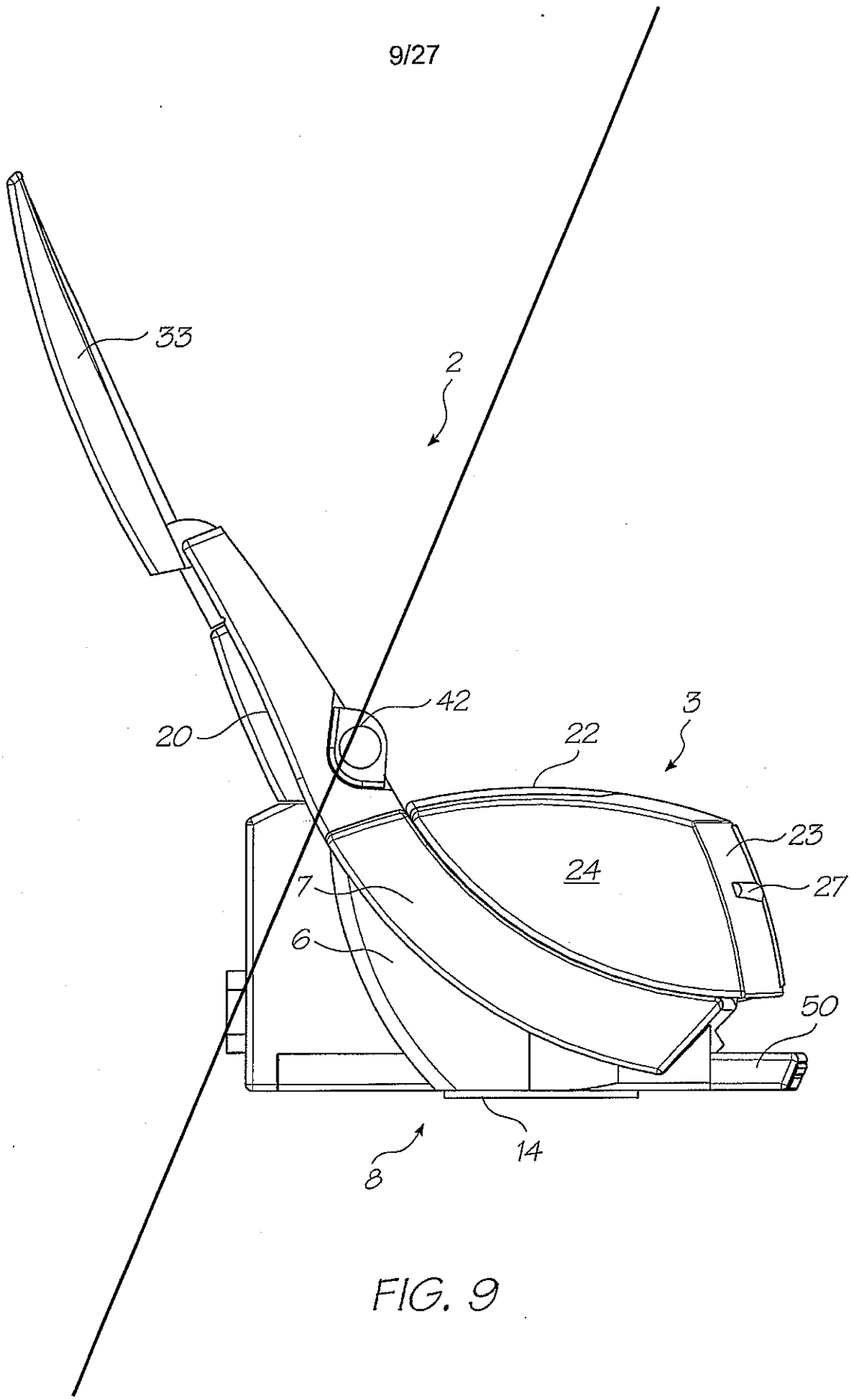

FIG. 9

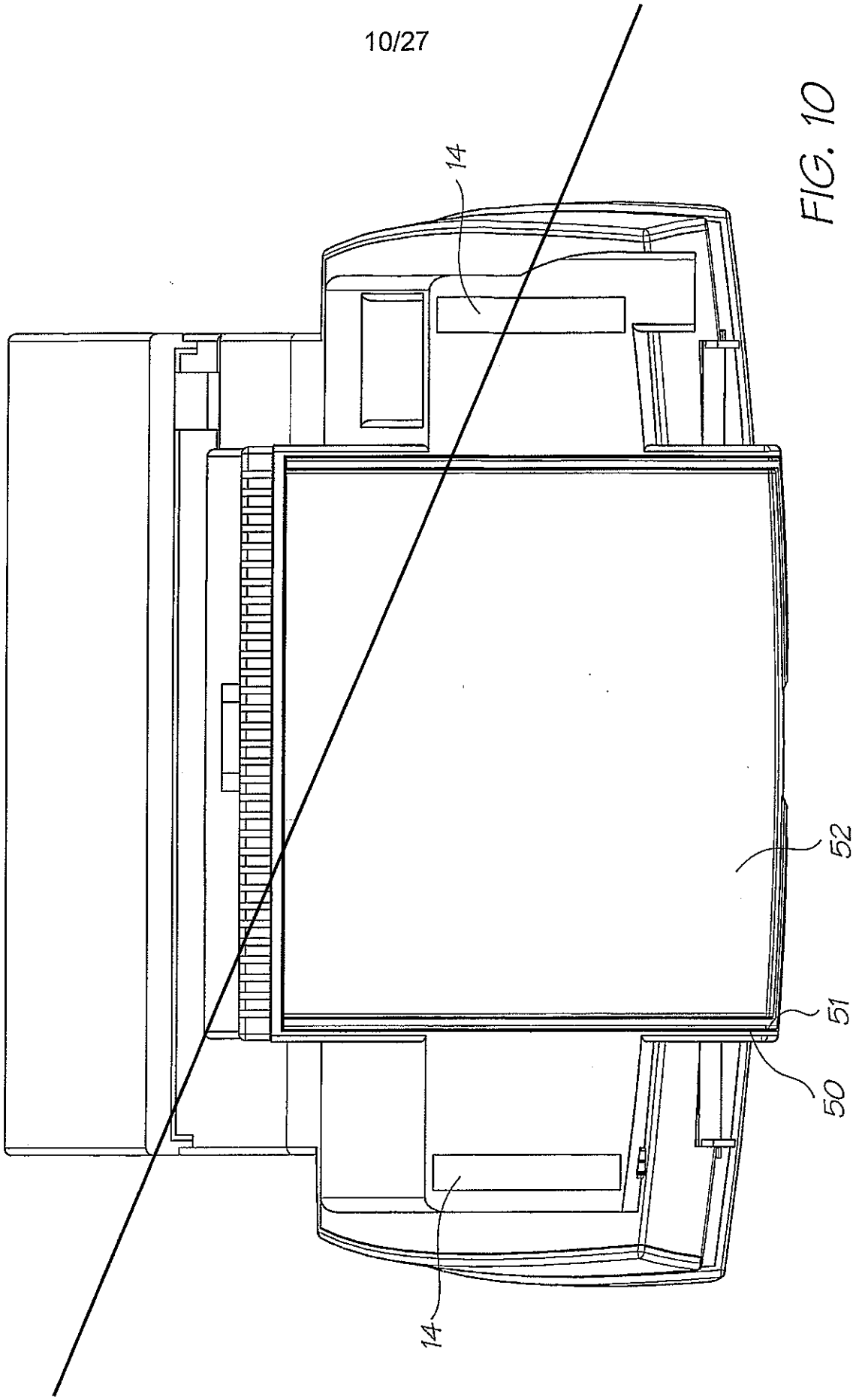

FIG. 10

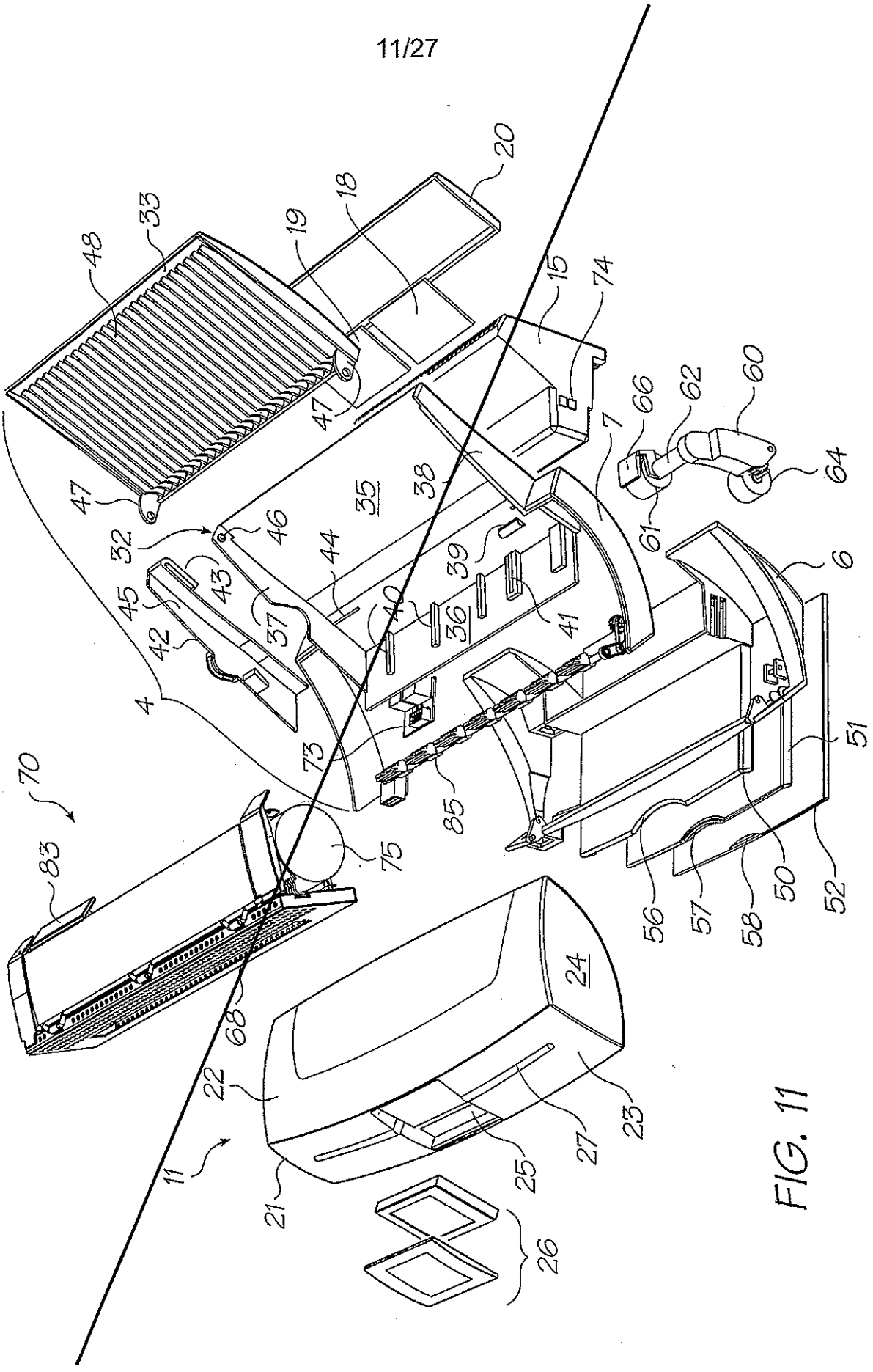
20
18
19
33
48
15
74
47
47
66
62
60
7
64
61
38
35
32
46
44
39
6
45
43
37
40
36
41
42
4
73
85
51
70
83
75
56
57
58
50
52
24
68
22
23
27
25
11
21
26

FIG. 11

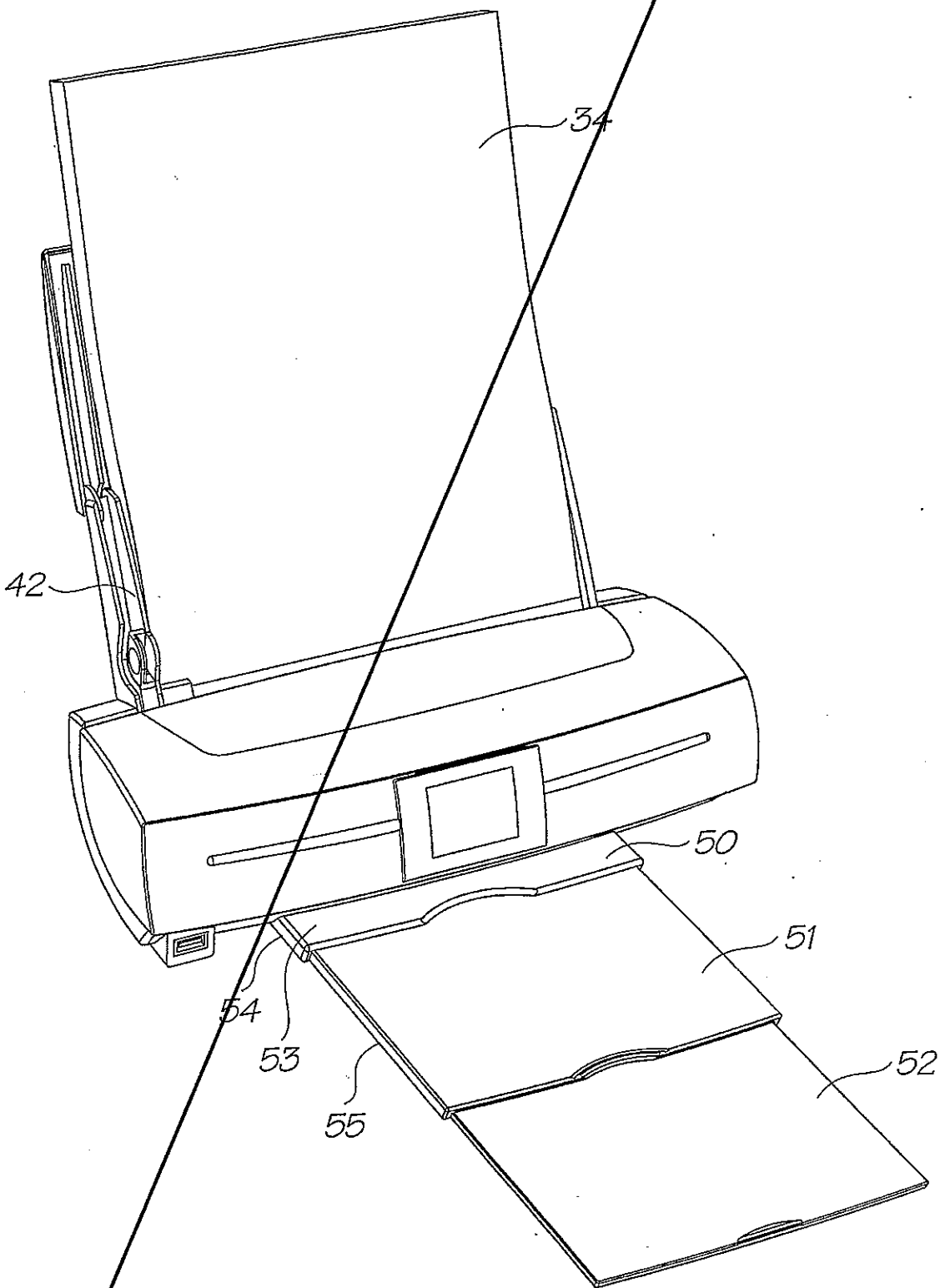

FIG. 12

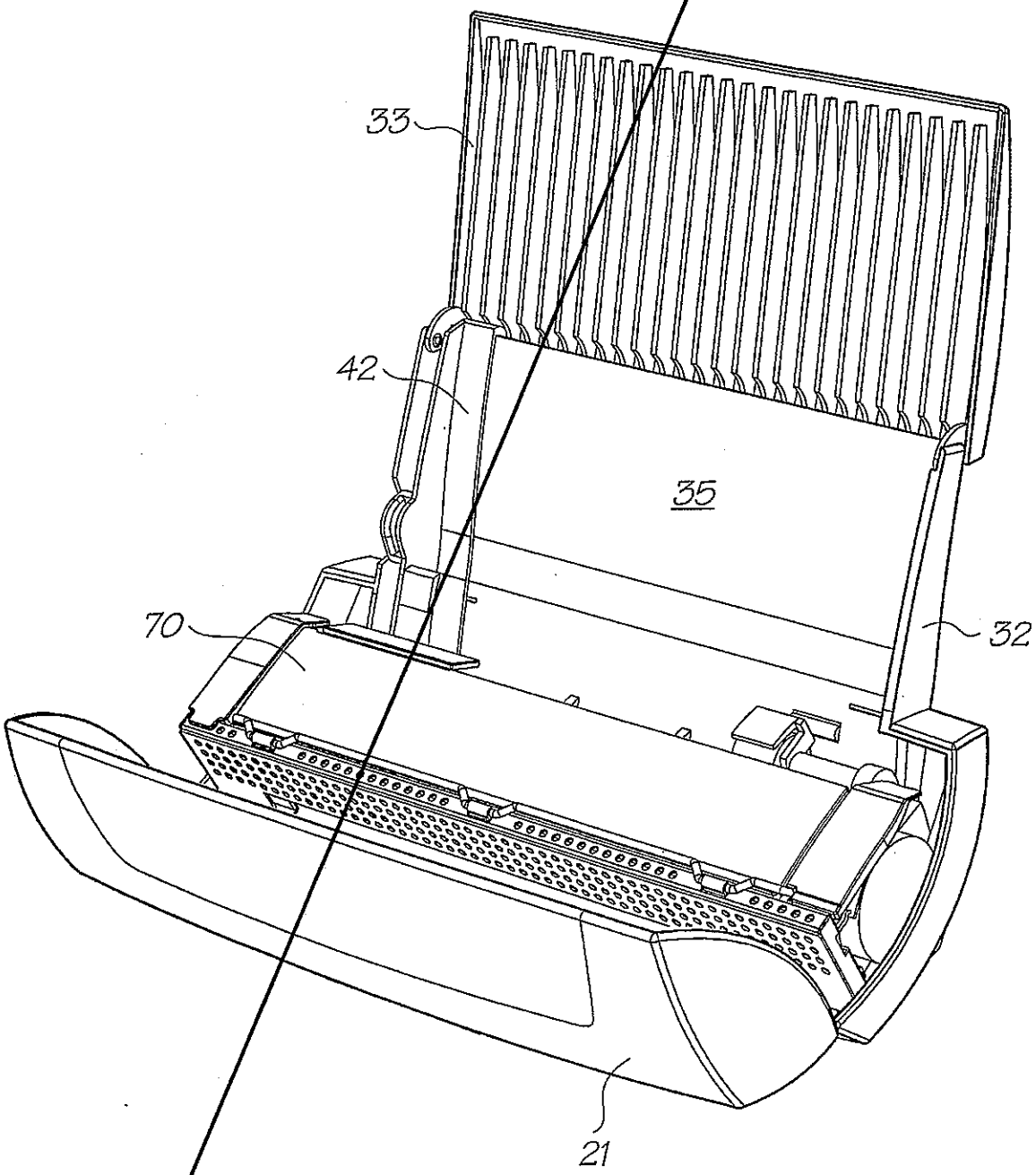

FIG. 13

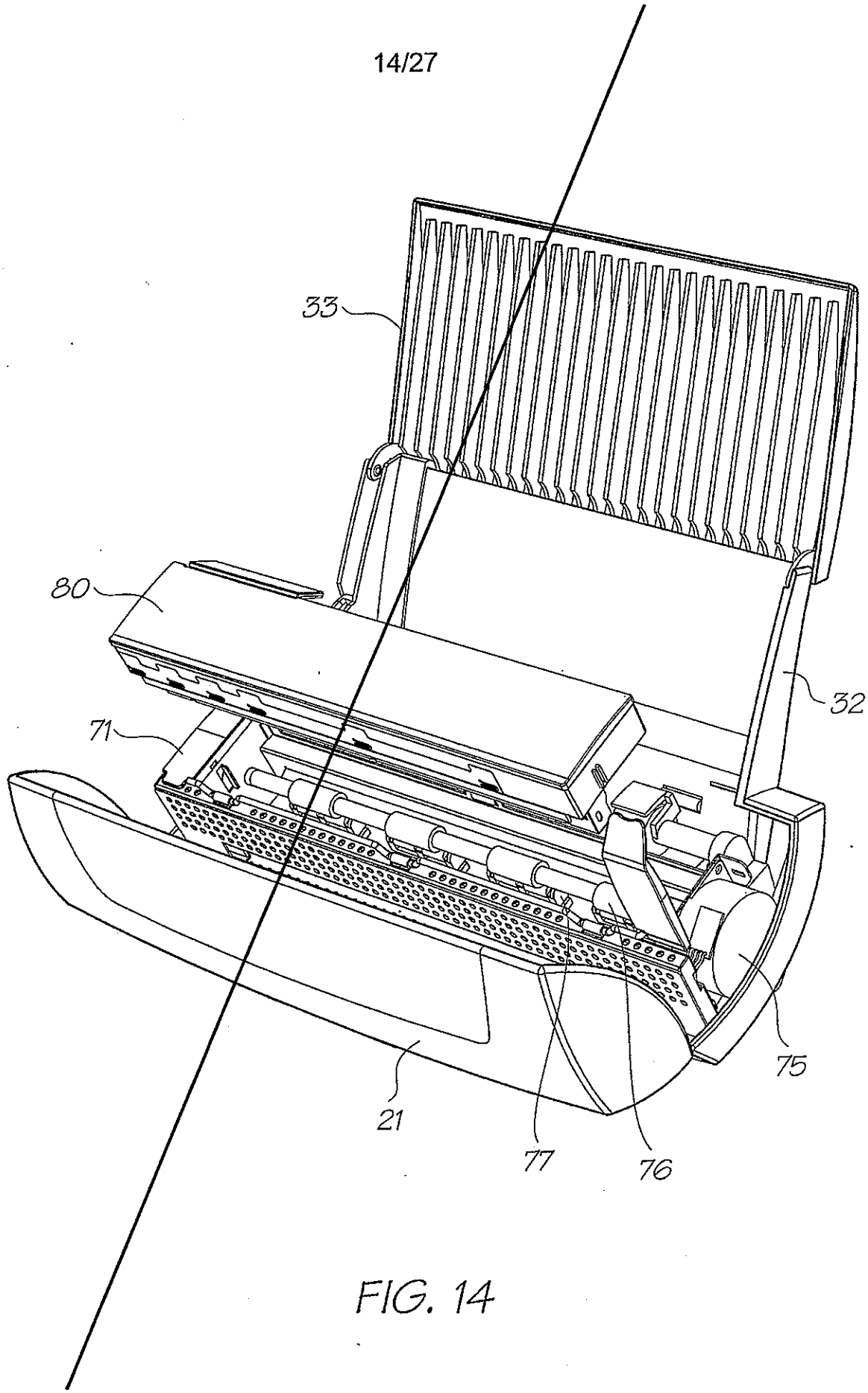

FIG. 14

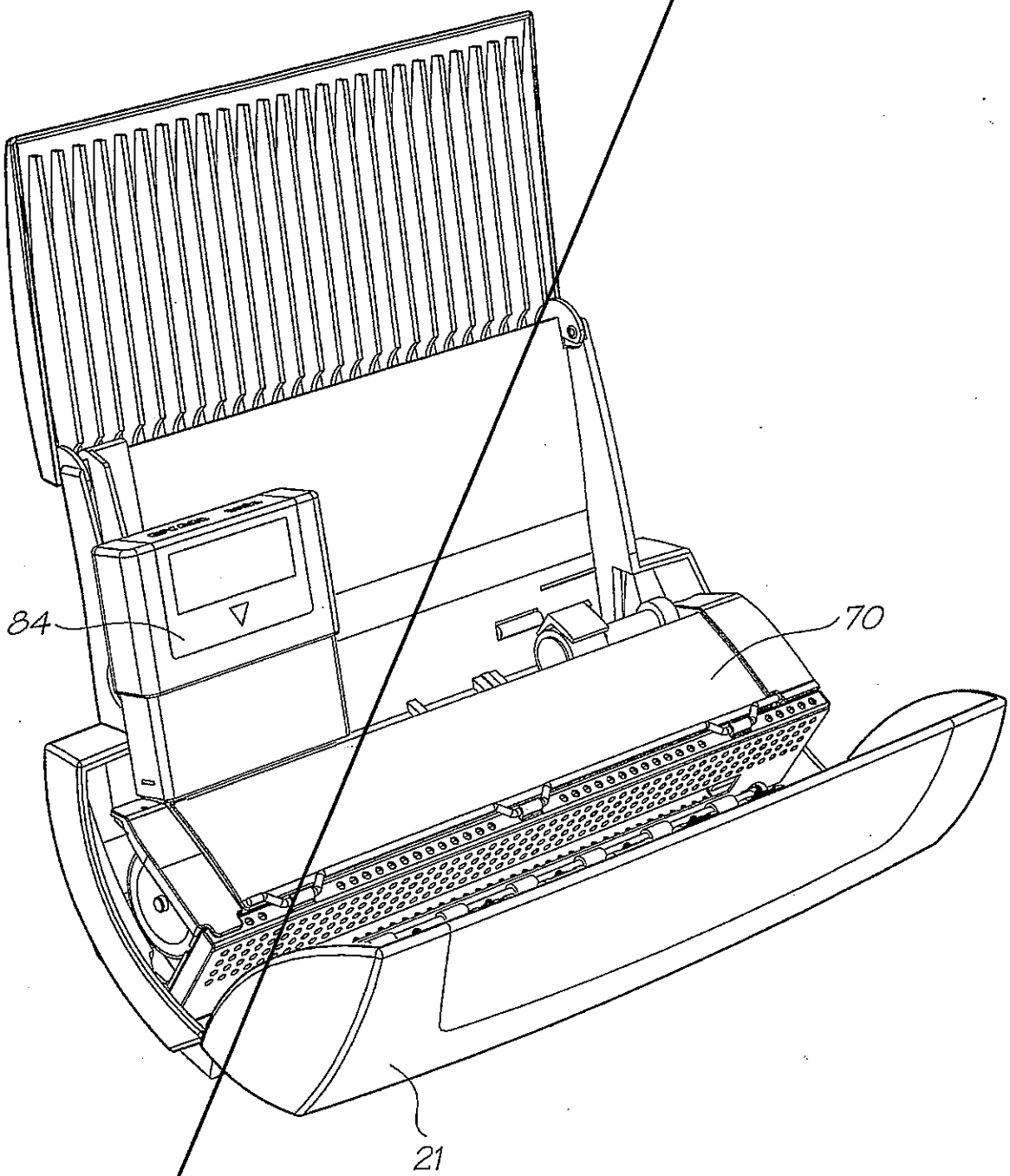

FIG. 15

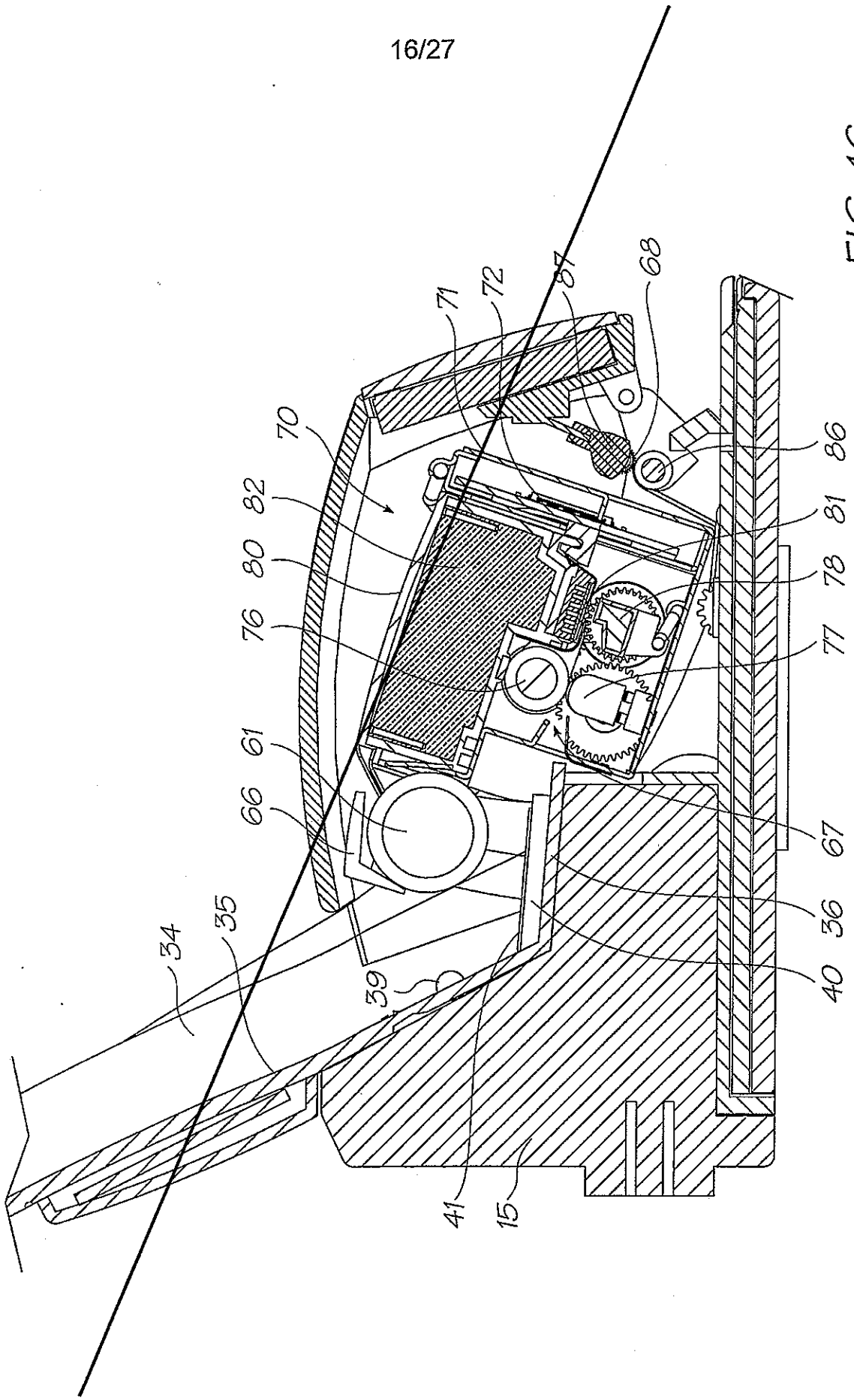

FIG. 16

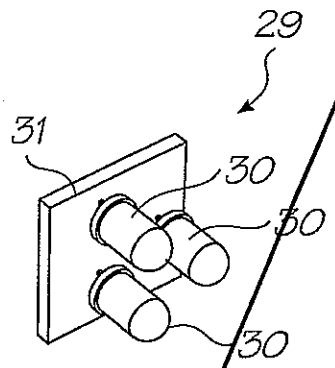

FIG. 17a

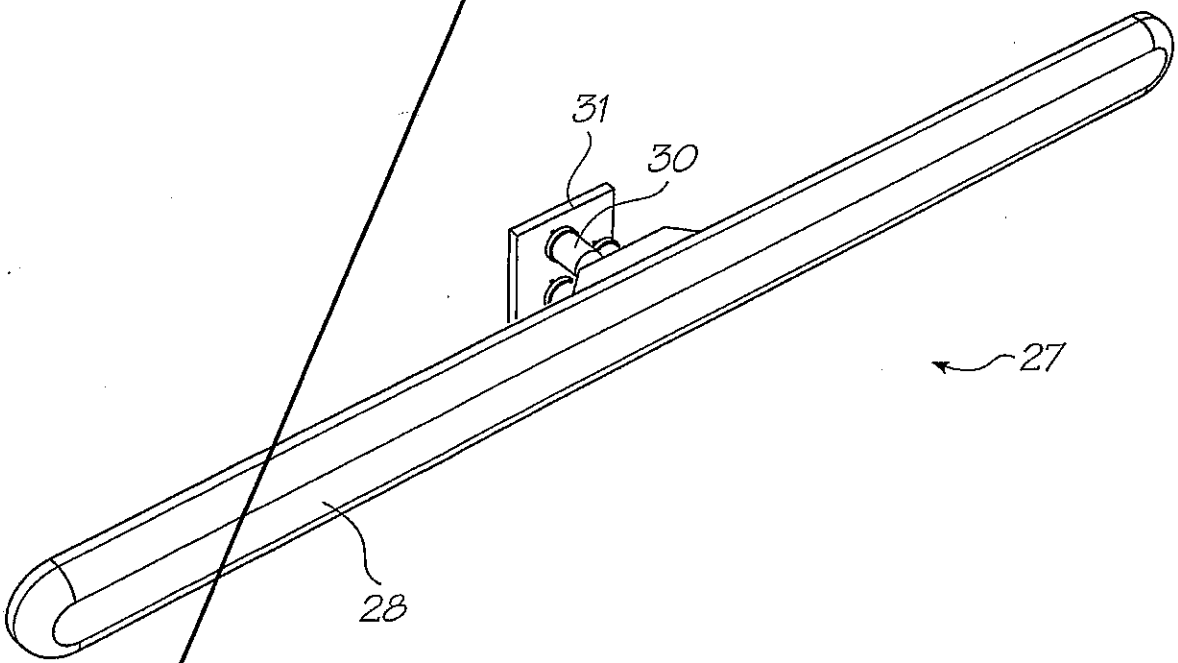

FIG. 17b

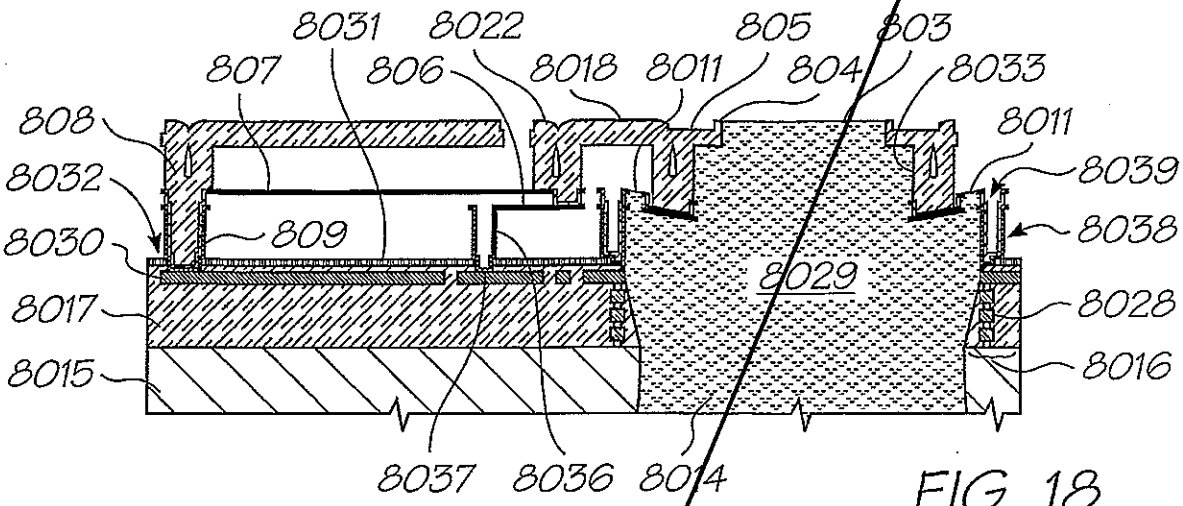

FIG. 18

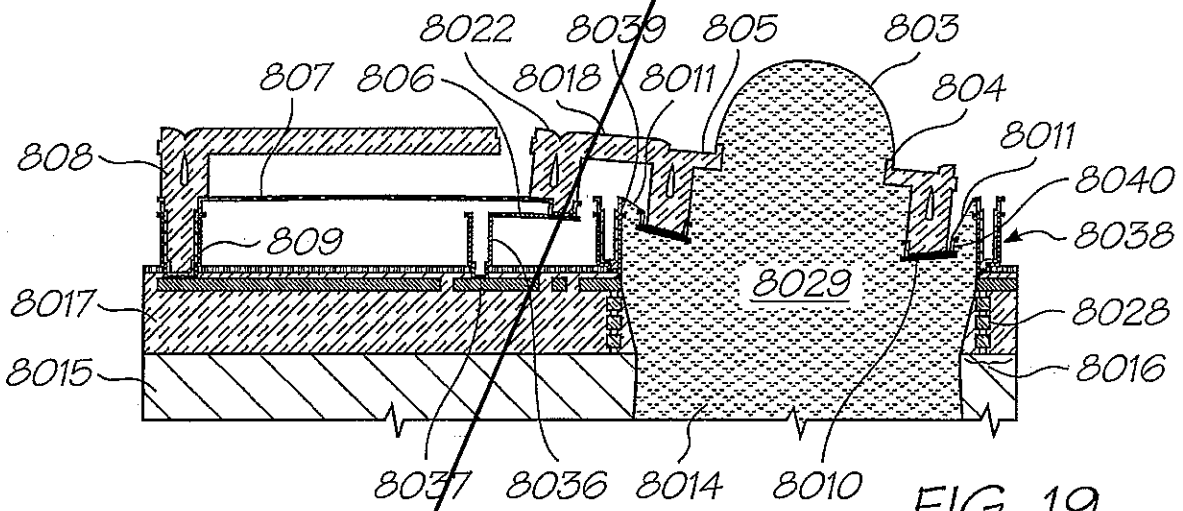

FIG. 19

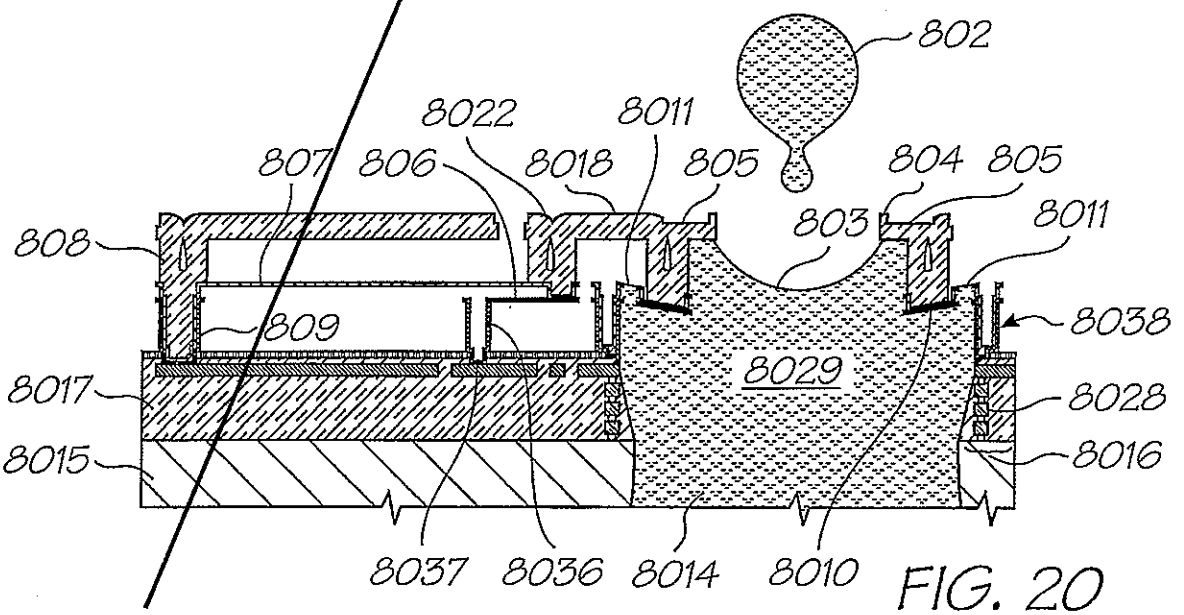

FIG. 20

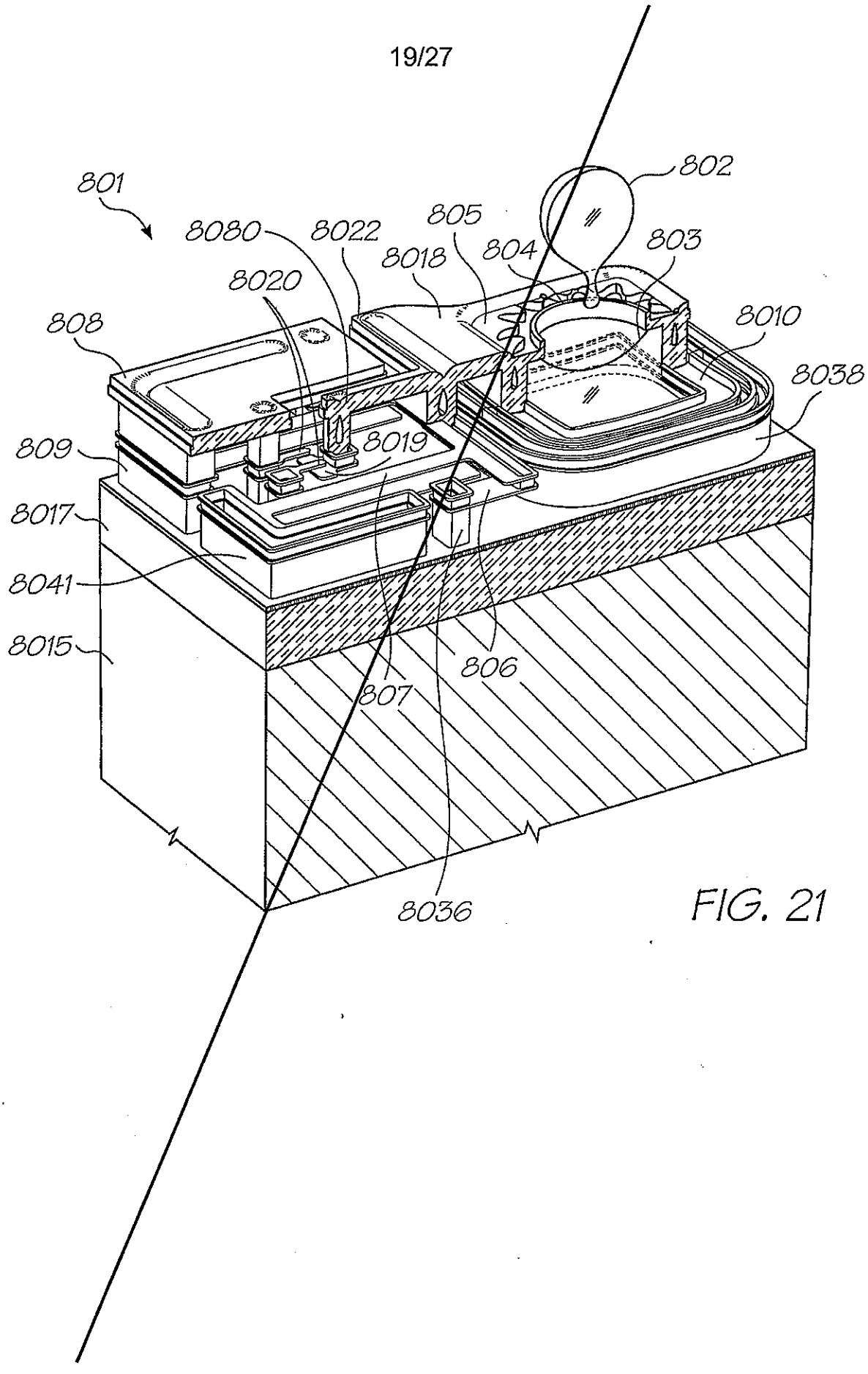
801
802
8080
8022
805
804
803
8018
8020
808
8010
8038
809
8019
8017
8041
8015
806
807
8036

FIG. 21

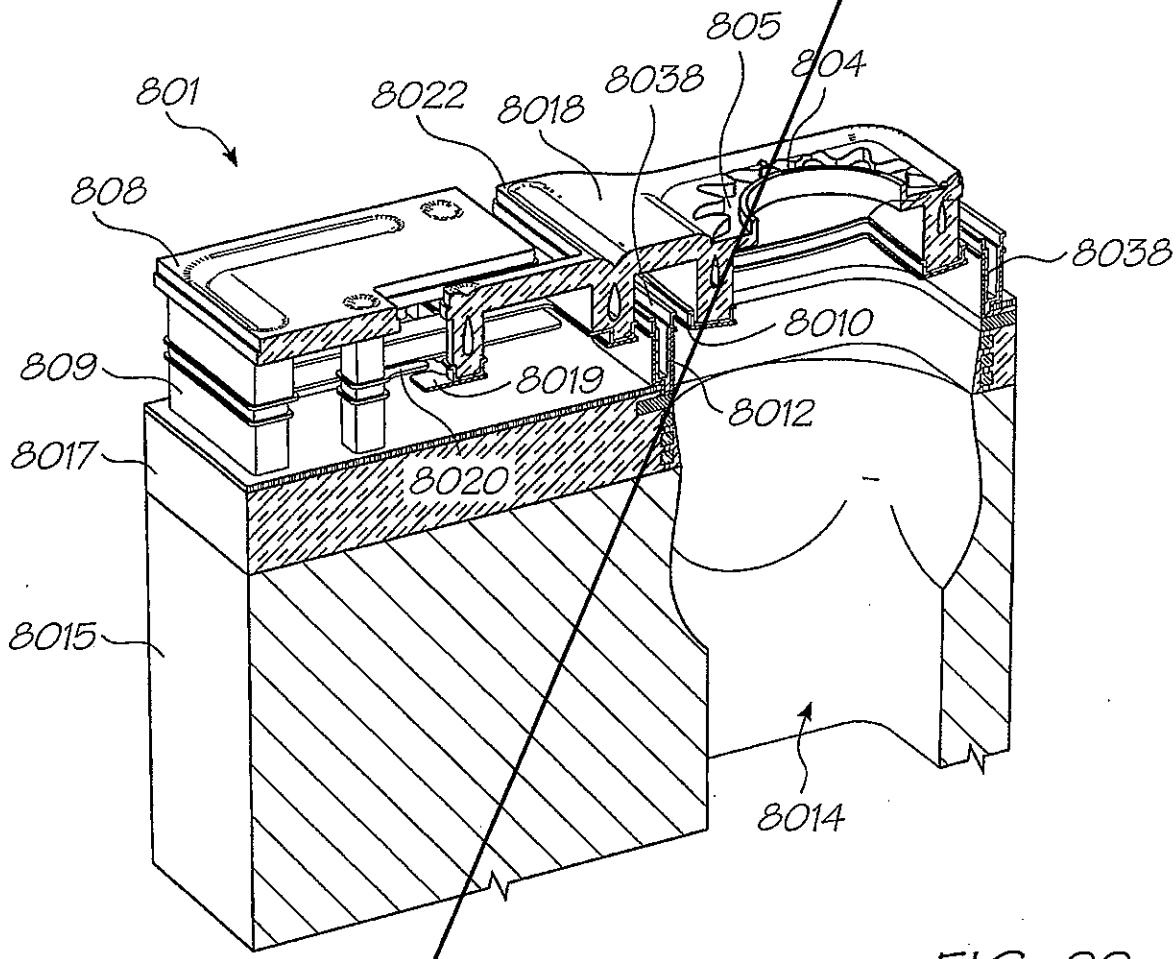
801
8022
8018
8038
805
804
808
8038
8010
809
8019
8012
8017
8020
8015
8014

FIG. 22

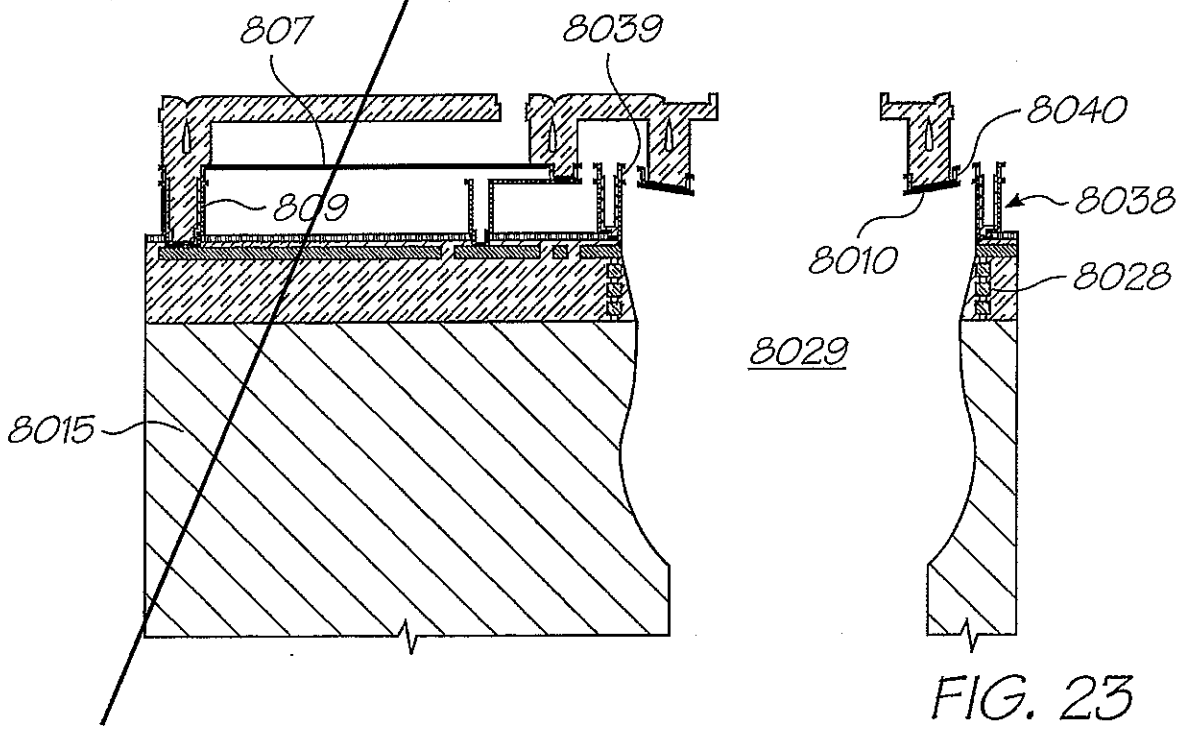
807
8039
809
8040
8038
8010
8028
8029
8015

FIG. 23

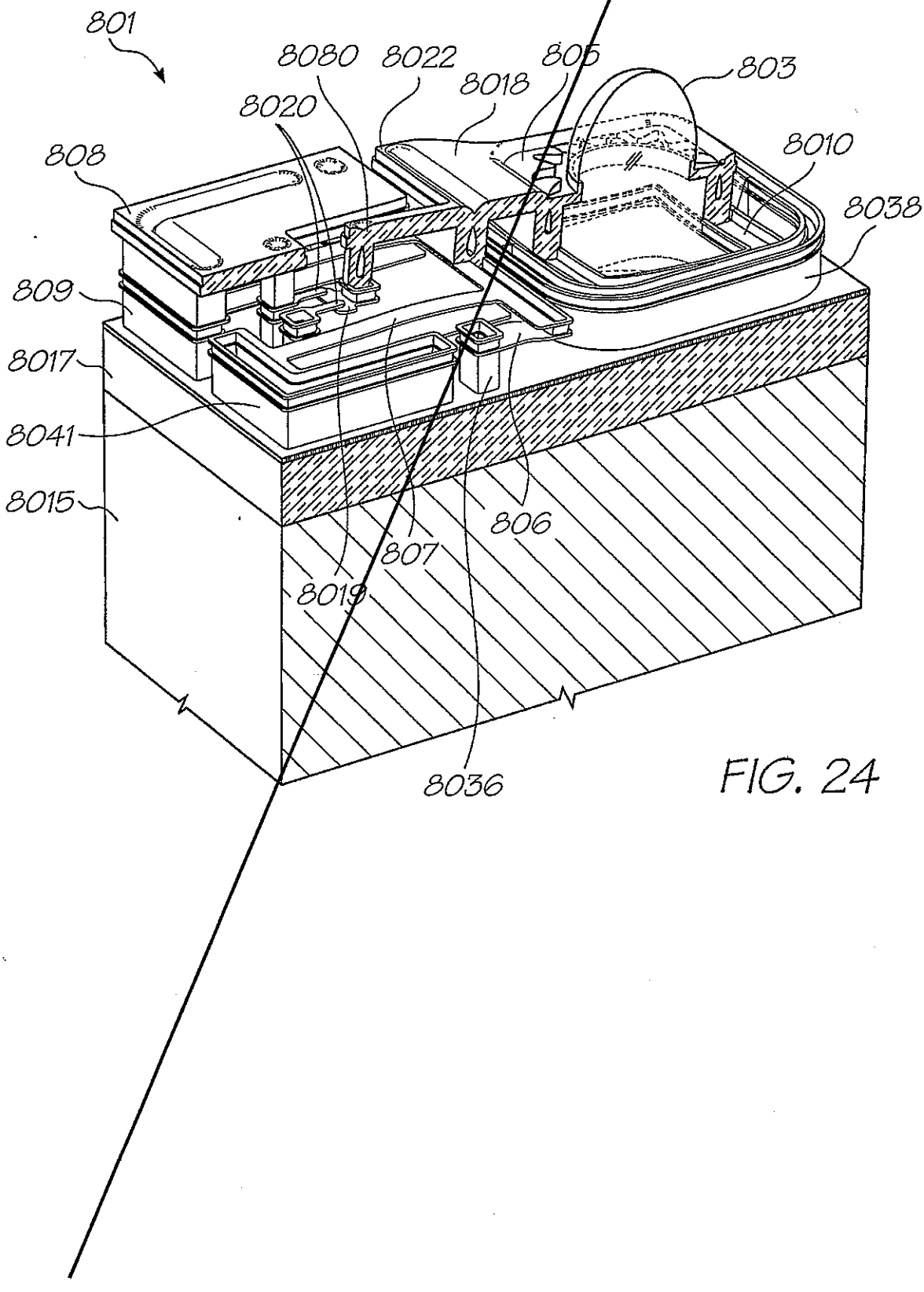
801
8080
8022
805
803
8020
8018
8010
808
8038
809
8017
8041
8015
806
807
8019
8036

FIG. 24

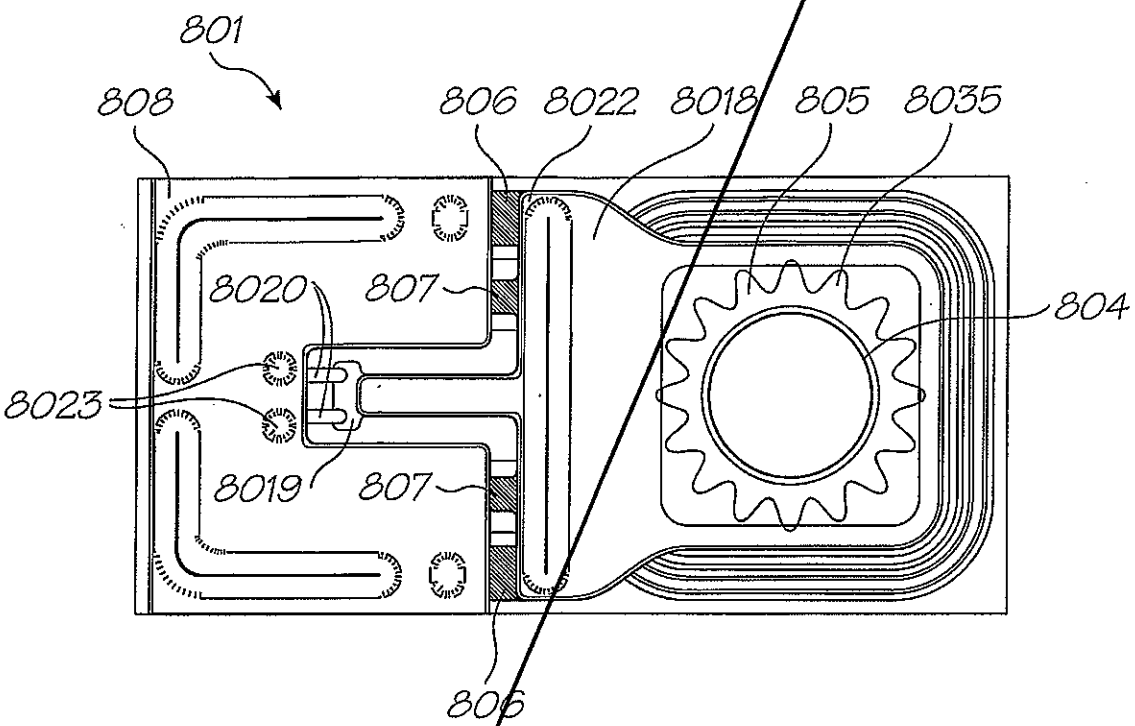
801
808
806
8022
8018
805
8035
804
8020
807
8023
8019
807
806

FIG. 25

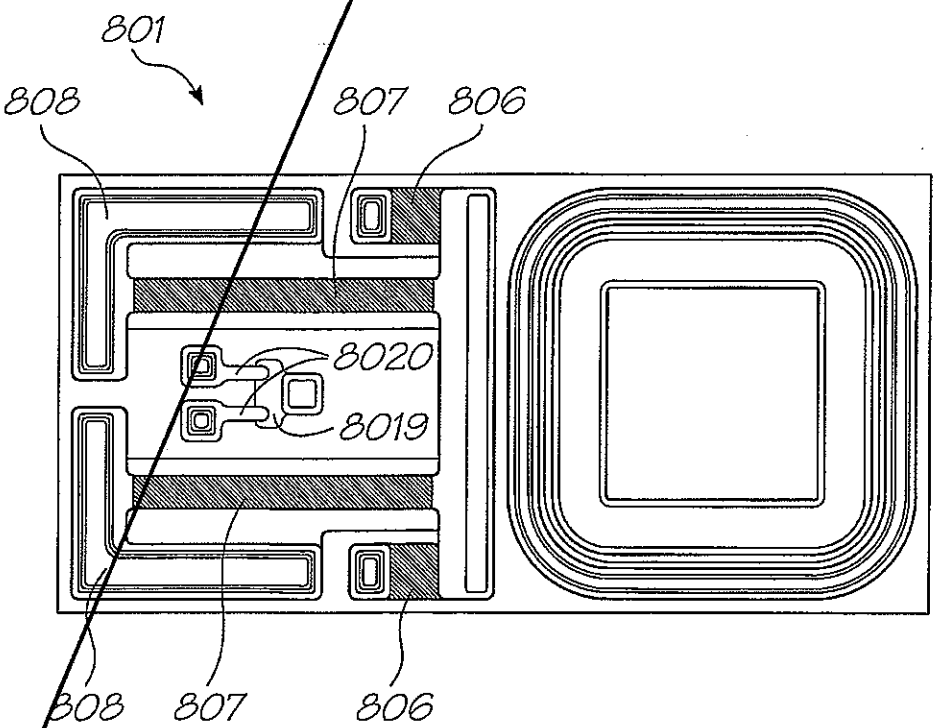
801
808
807
806
8020
8019
808
807
806

FIG. 26

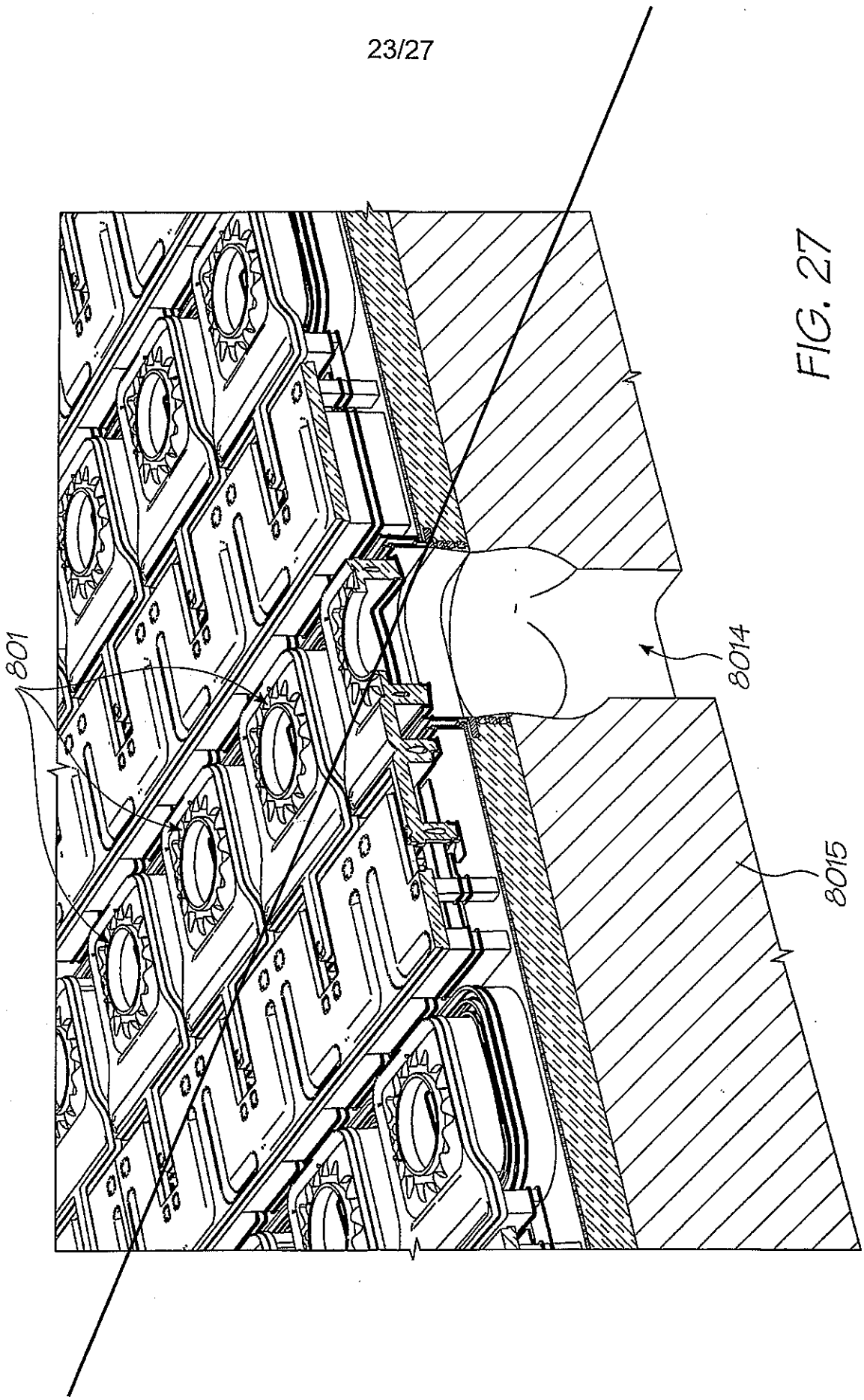

FIG. 27

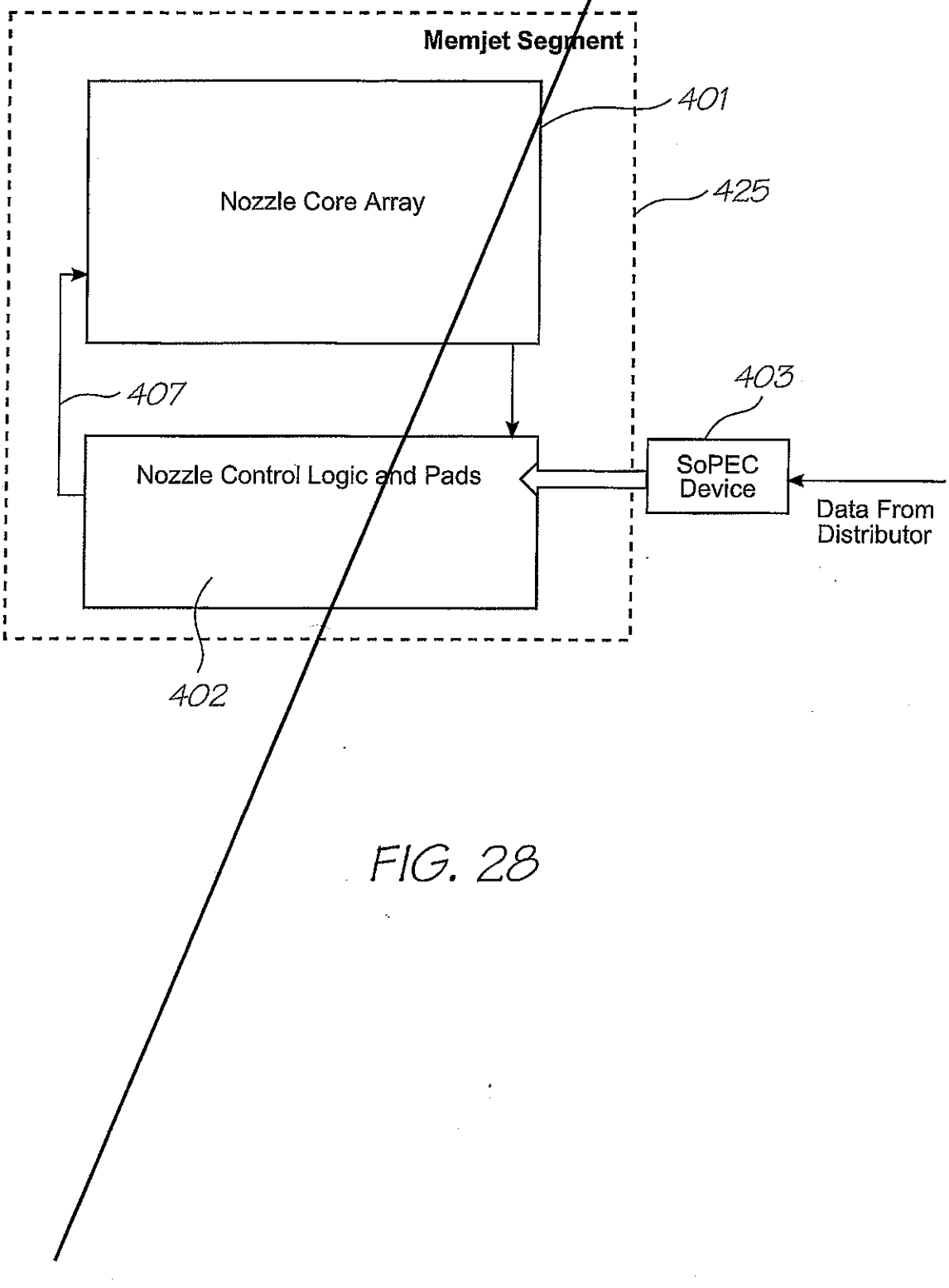
Memjet Segment
401
425
Nozzle Core Array
407
403
Nozzle Control Logic and Pads
SoPEC Device
Data From Distributor
402

FIG. 28

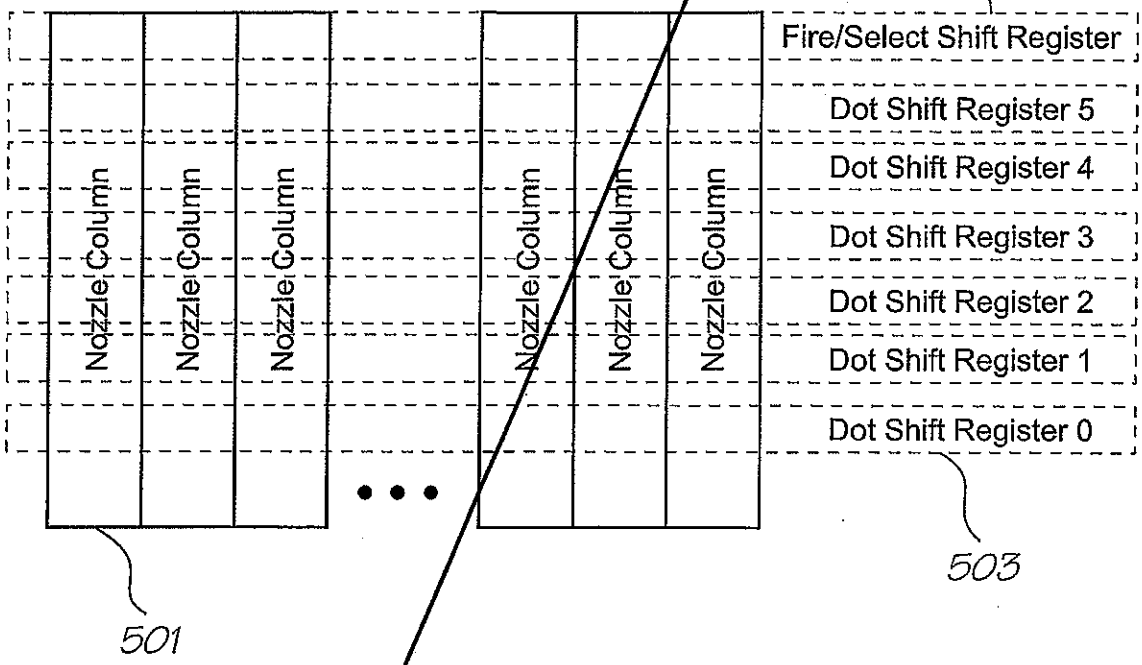
502
Fire/Select Shift Register
Dot Shift Register 5
Dot Shift Register 4
Dot Shift Register 3
Dot Shift Register 2
Dot Shift Register 1
Dot Shift Register 0
Nozzle Column
Nozzle Column
Nozzle Column
Nozzle Column
Nozzle Column
Nozzle Column
503
501

FIG. 29

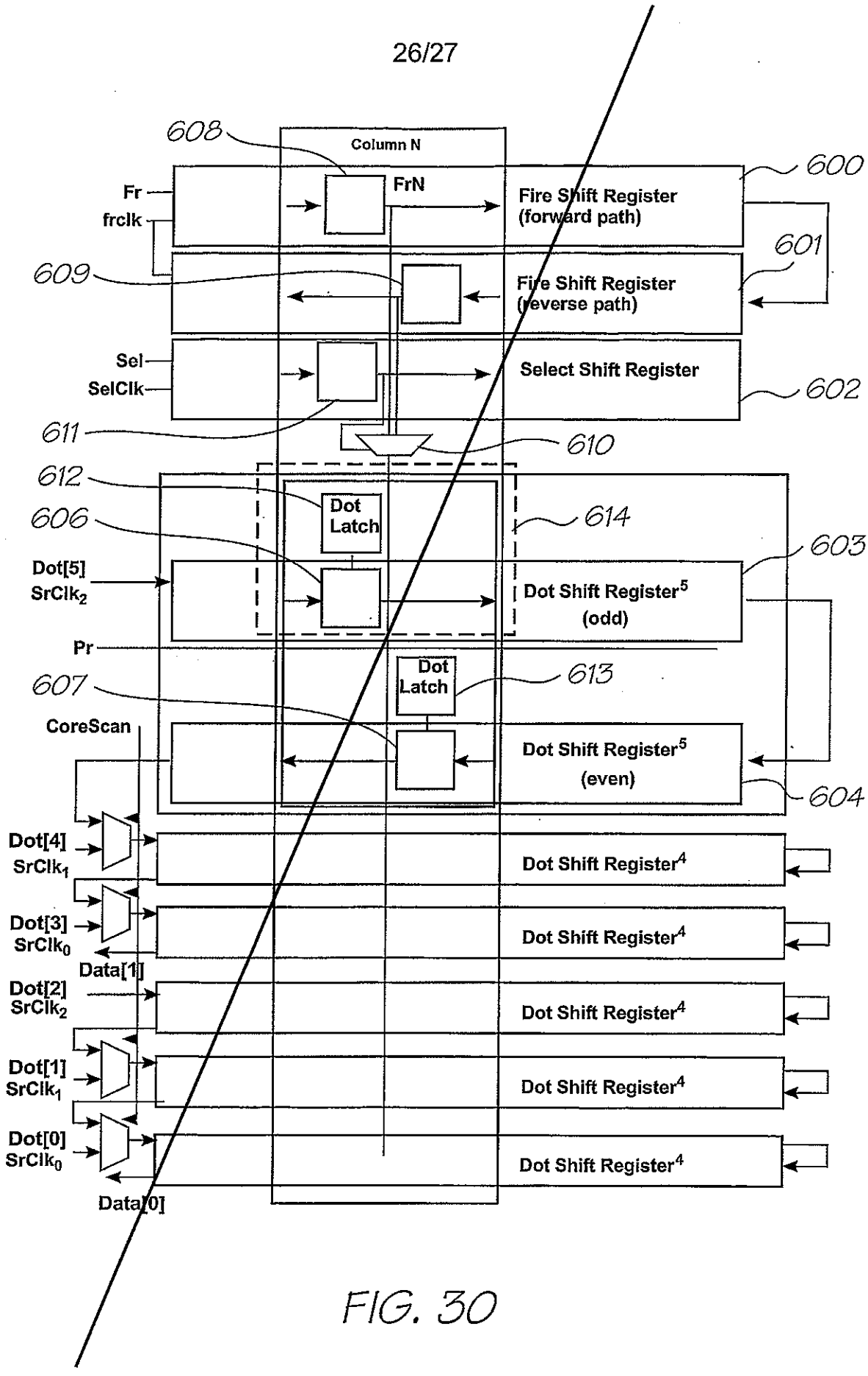
608
Column N
600
Fr
frclk
FrN
Fire Shift Register
(forward path)
601
609
Fire Shift Register
(reverse path)
Sel
SelClk
Select Shift Register
602
611
610
612
Dot
Latch
614
606
603
Dot[5]
SrClk2
Dot Shift Register5
(odd)
Pr
Dot
Latch
613
607
CoreScan
Dot Shift Register5
(even)
604
Dot[4]
SrClk1
Dot Shift Register4
Dot[3]
SrClk0
Dot Shift Register4
Data[1]
Dot[2]
SrClk2
Dot Shift Register4
Dot[1]
SrClk1
Dot Shift Register4
Dot[0]
SrClk0
Dot Shift Register4
Data[0]

FIG. 30

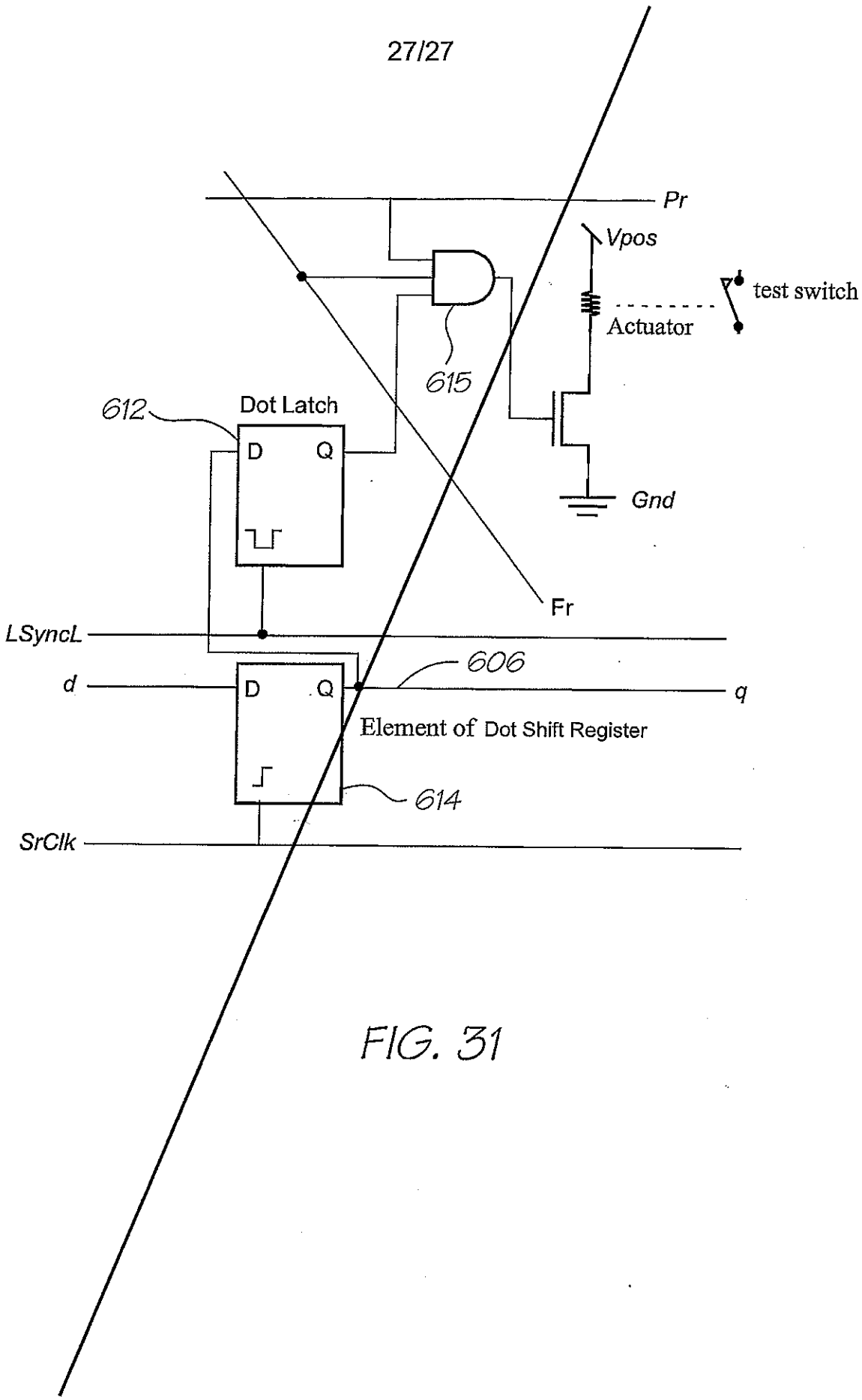
Pr
Vpos
test switch
Actuator
615
612
Dot Latch
D
Q
Gnd
Fr
LSyncL
606
d
D
Q
q
Element of Dot Shift Register
614
SrClk

FIG. 31

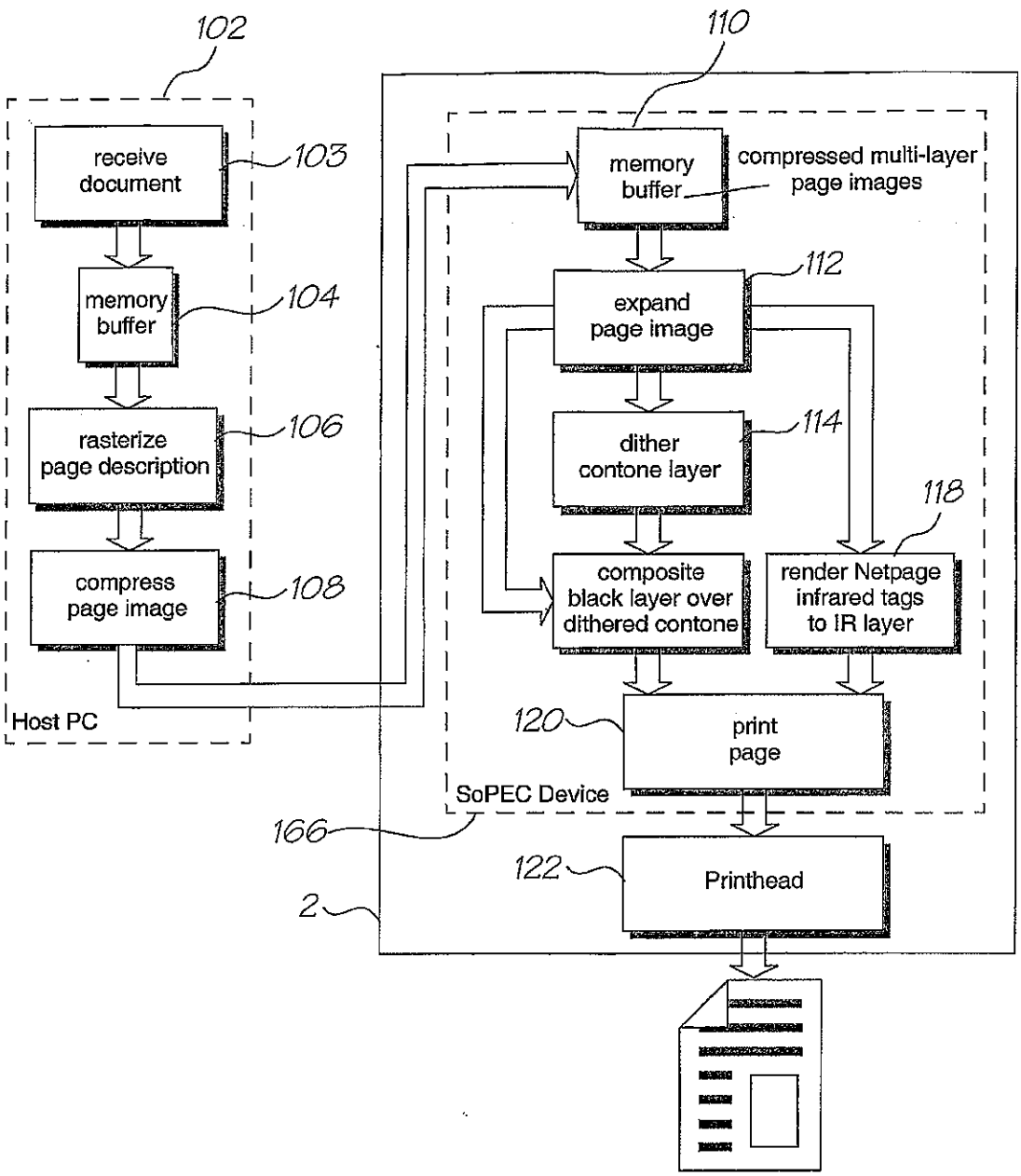
102
110
receive document
103
memory buffer
104
rasterize page description
106
compress page image
108
Host PC
memory buffer
compressed multi-layer page images
112
expand page image
114
dither contone layer
118
composite black layer over dithered contone
render Netpage infrared tags to IR layer
120
print page
SoPEC Device
166
122
Printhead
2

FIG. 1

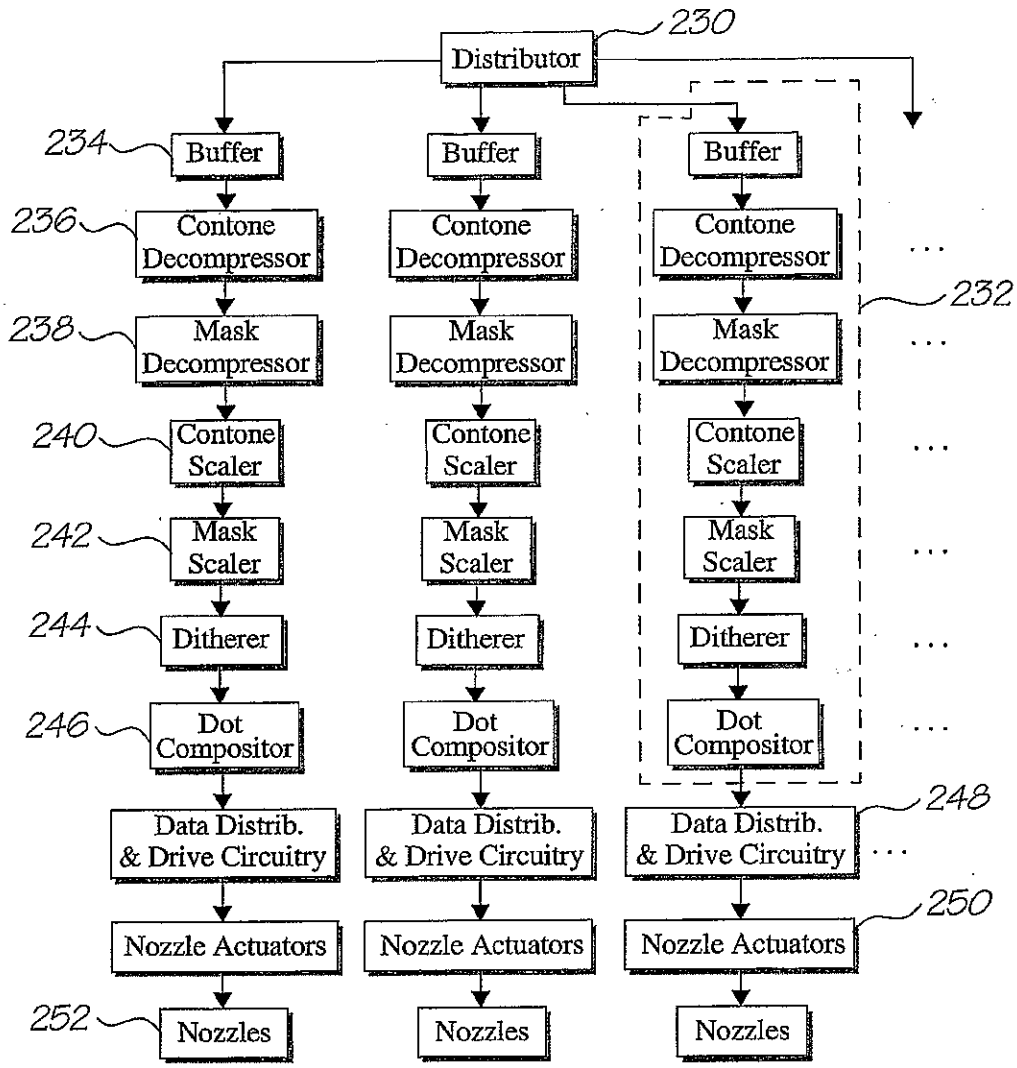
230
Distributor
234
Buffer
236
Contone Decompressor
238
Mask Decompressor
240
Contone Scaler
242
Mask Scaler
244
Ditherer
246
Dot Compositor
Data Distrib. & Drive Circuitry
Nozzle Actuators
252
Nozzles
232
248
250

FIG. 2

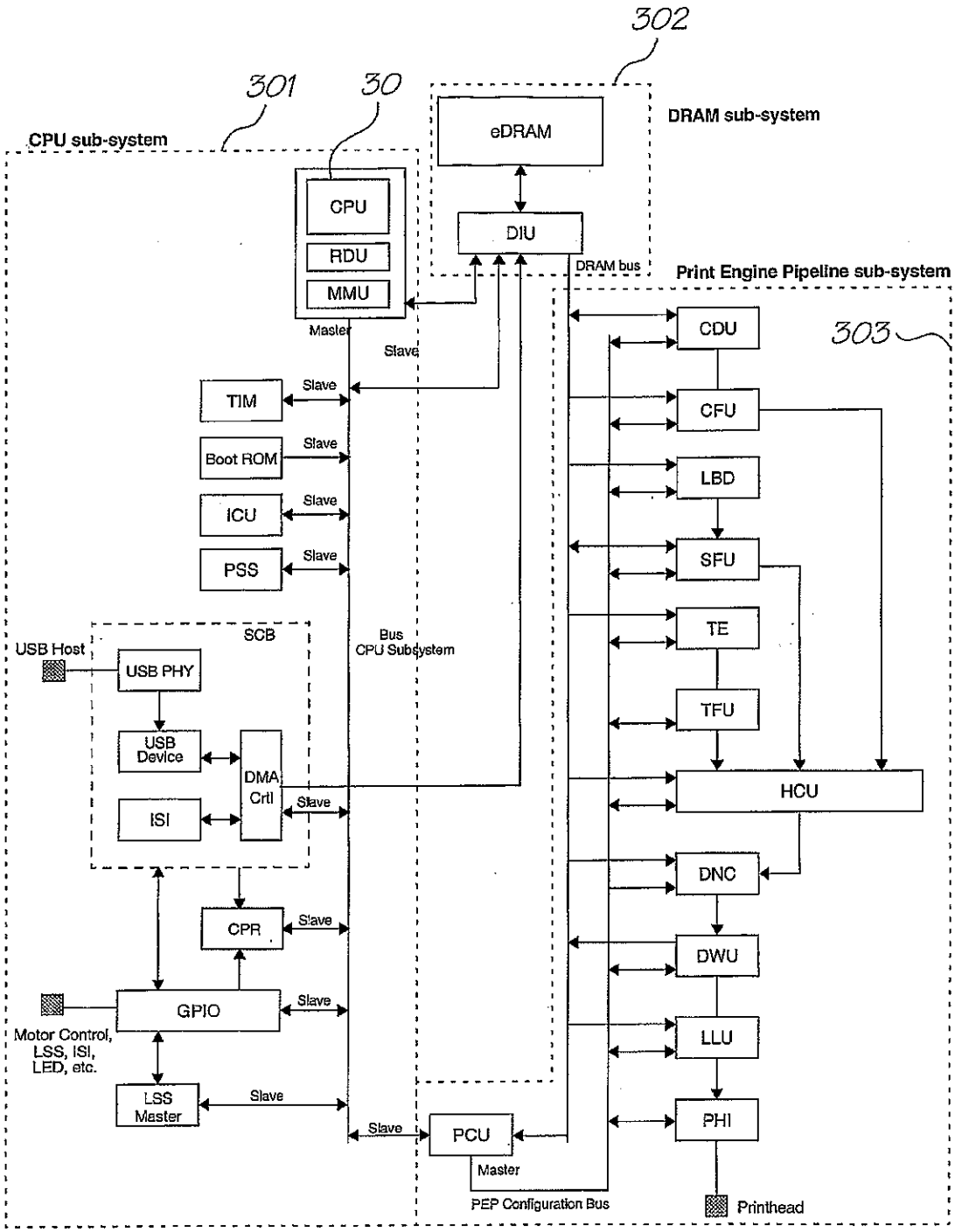
302
301
30
CPU sub-system
eDRAM
DRAM sub-system
CPU
RDU
MMU
DIU
DRAM bus
Print Engine Pipeline sub-system
Master
Slave
303
CDU
TIM
CFU
Boot ROM
LBD
ICU
SFU
PSS
TE
SCB
Bus
CPU Subsystem
USB Host
USB PHY
TFU
USB Device
DMA Ctrl
HCU
ISI
DNC
CPR
DWU
GPIO
LLU
Motor Control, LSS, ISI, LED, etc.
LSS Master
PHI
PCU
Master
PEP Configuration Bus
Printhead

FIG. 3

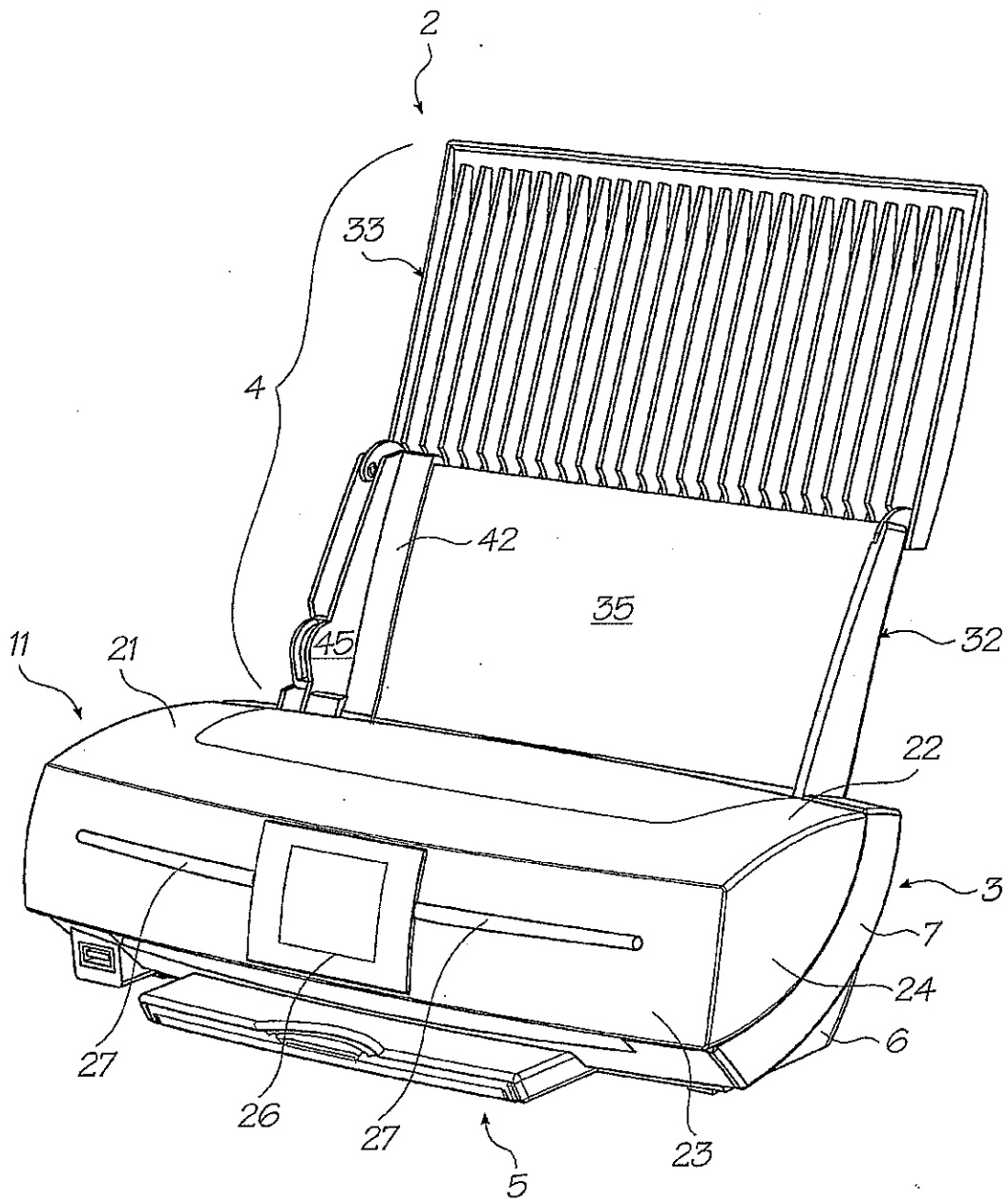

FIG. 4

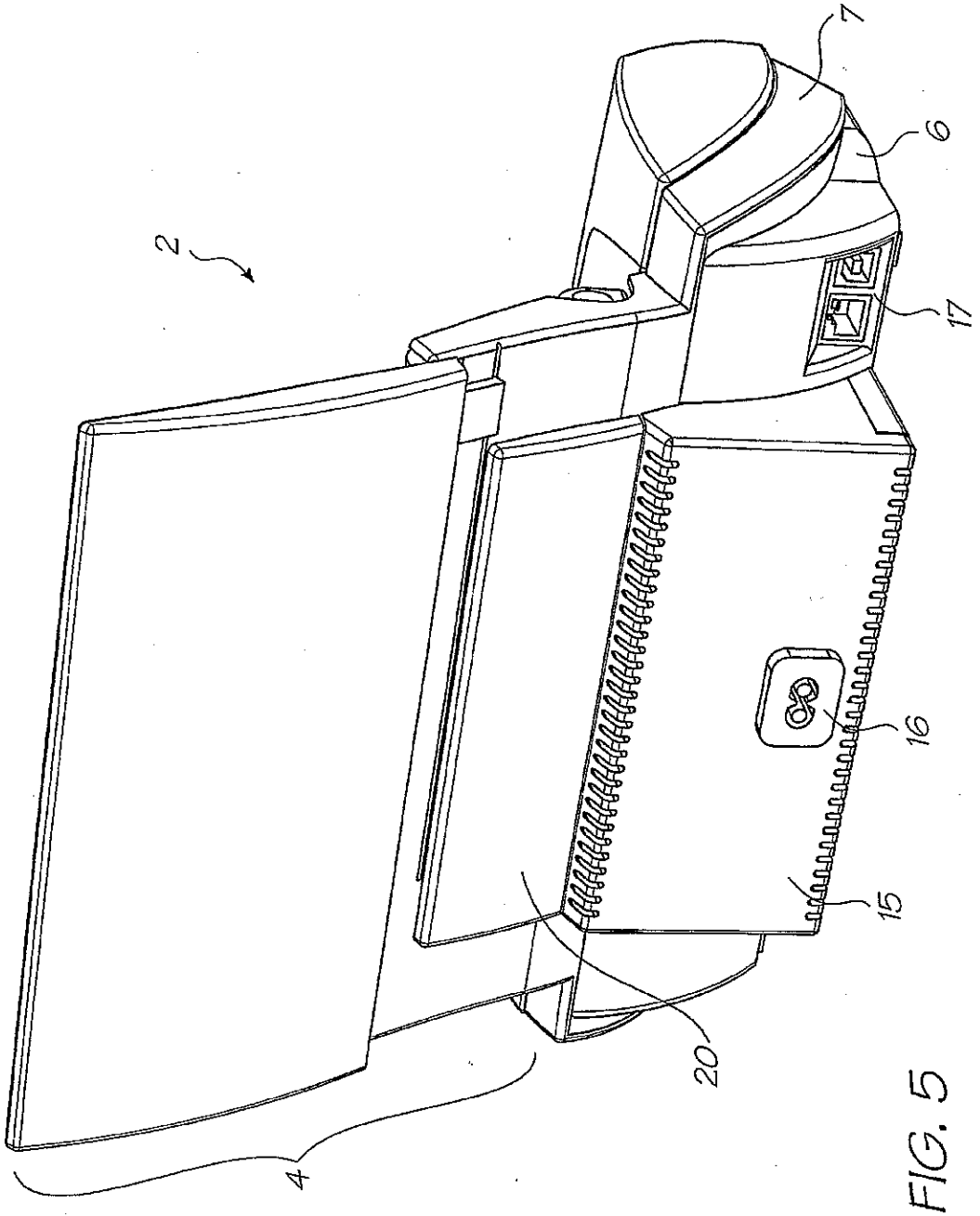

FIG. 5

FIG. 6

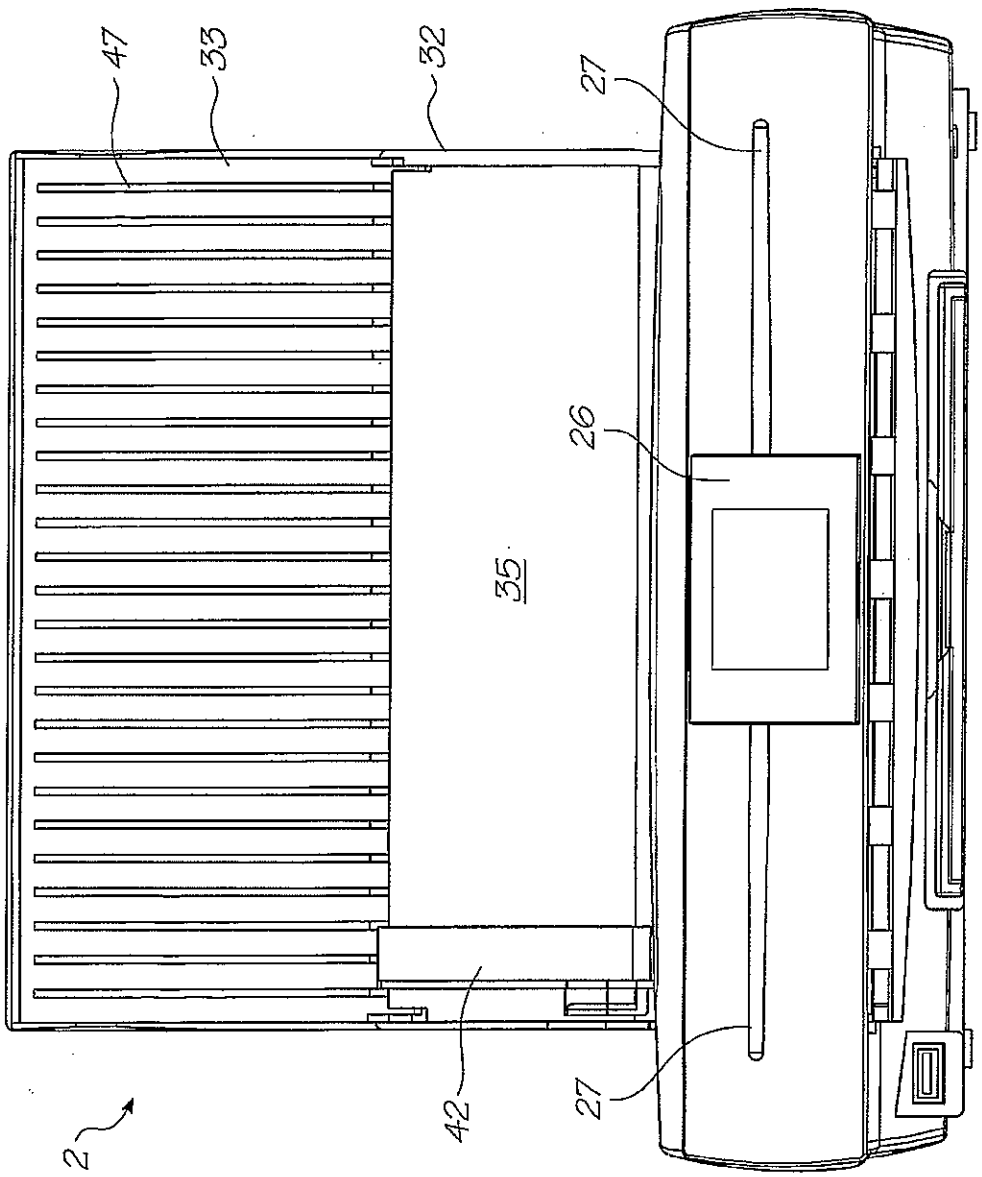

FIG. 7

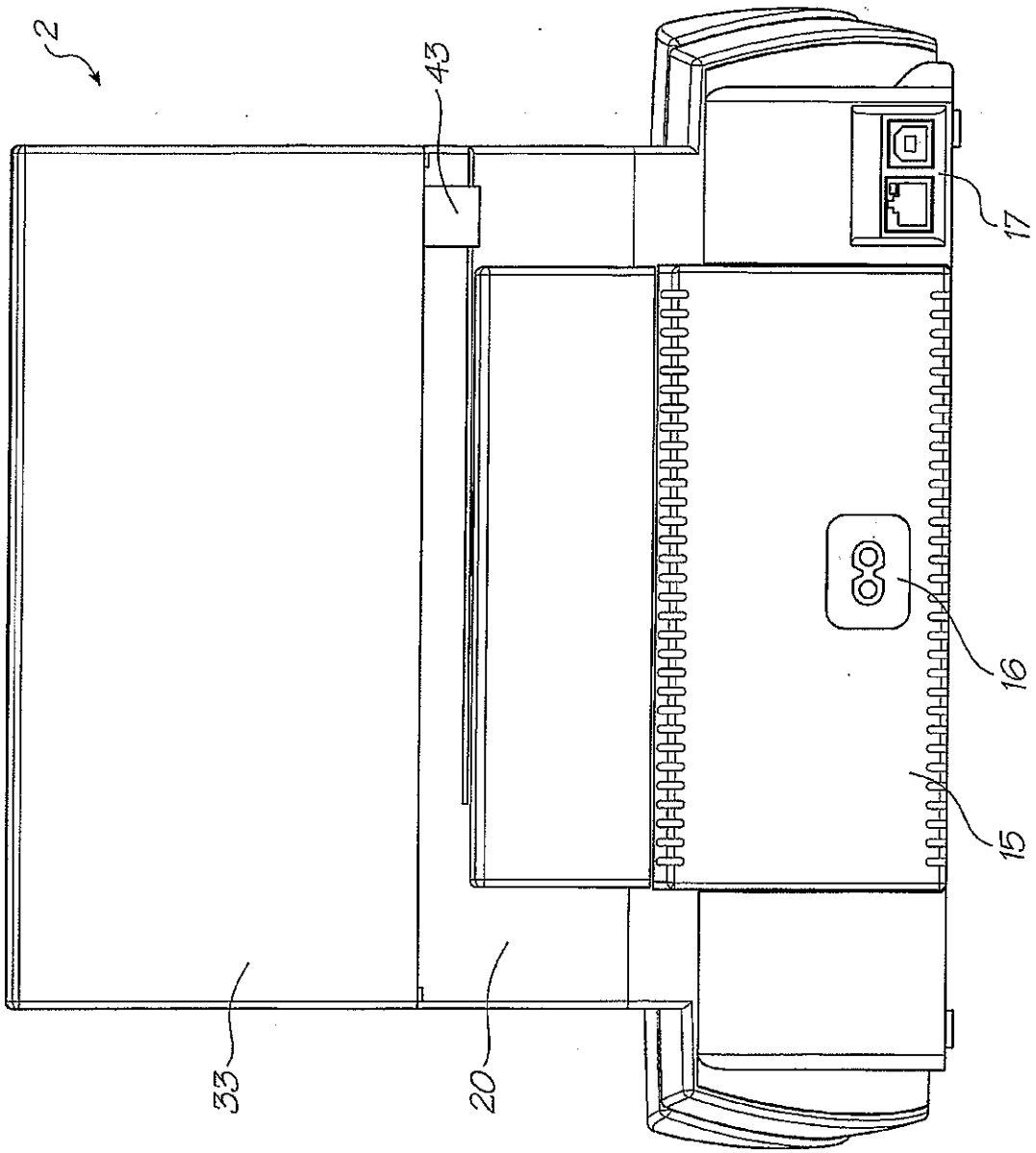

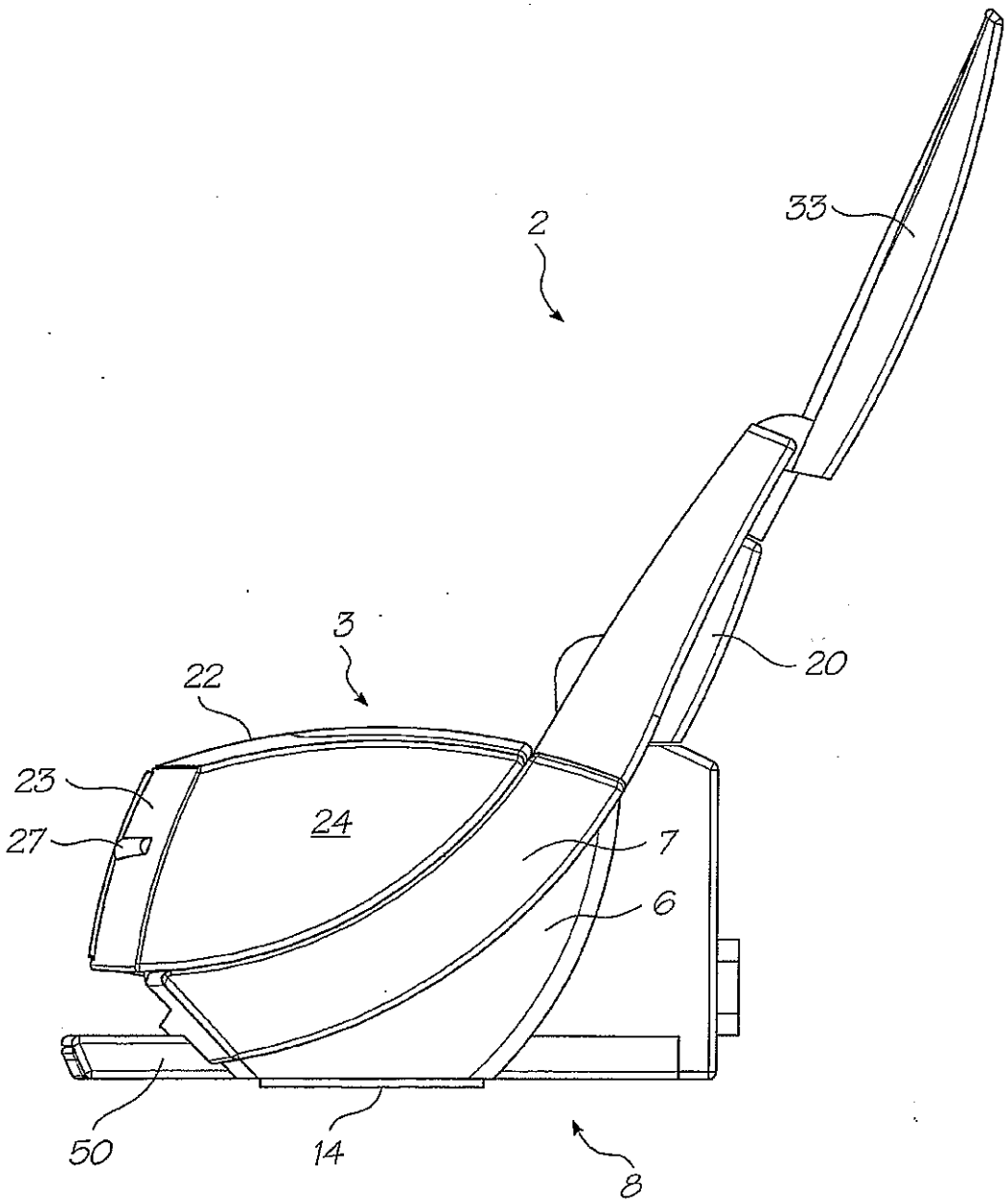

FIG. 8

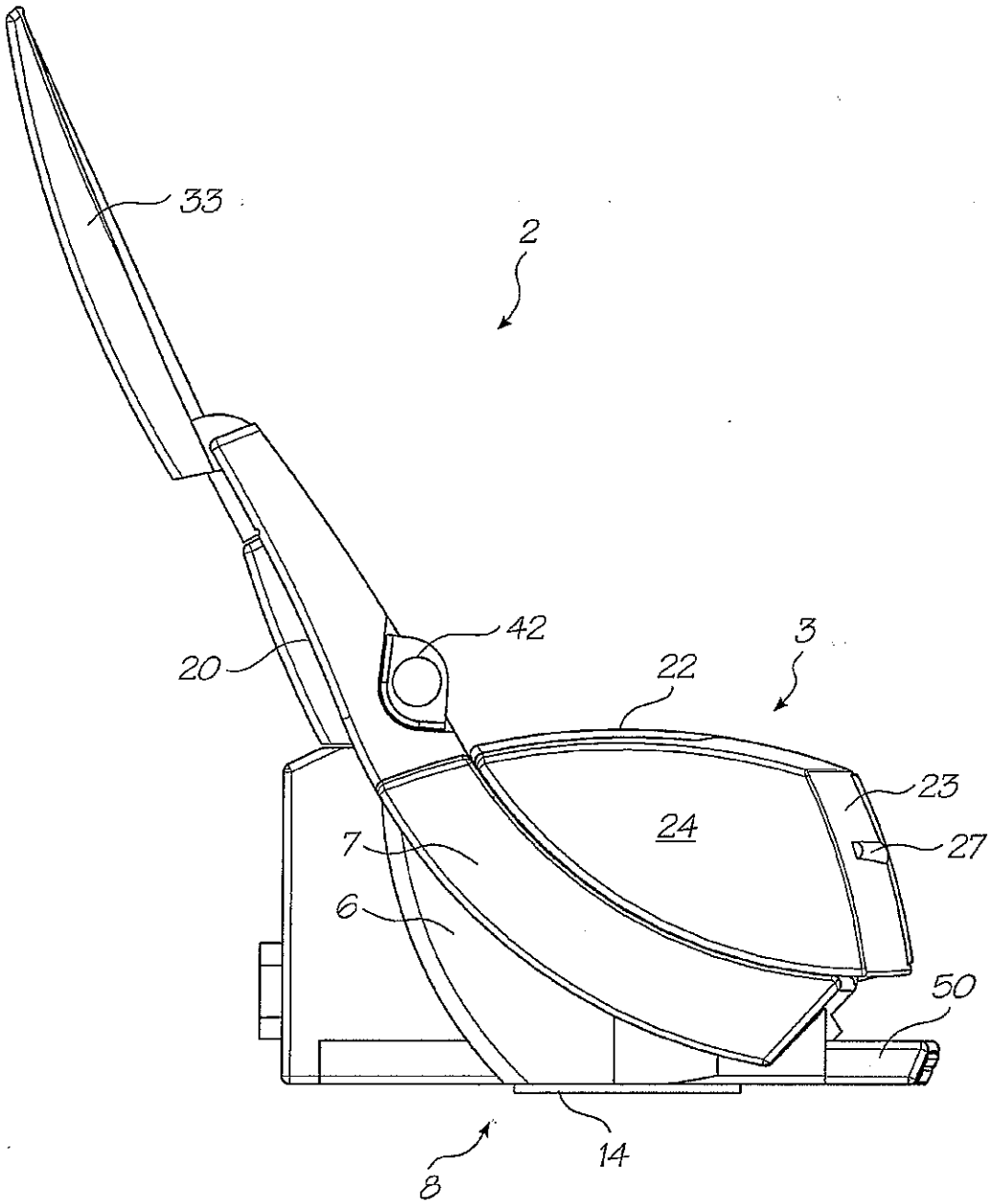

FIG. 9

FIG. 10

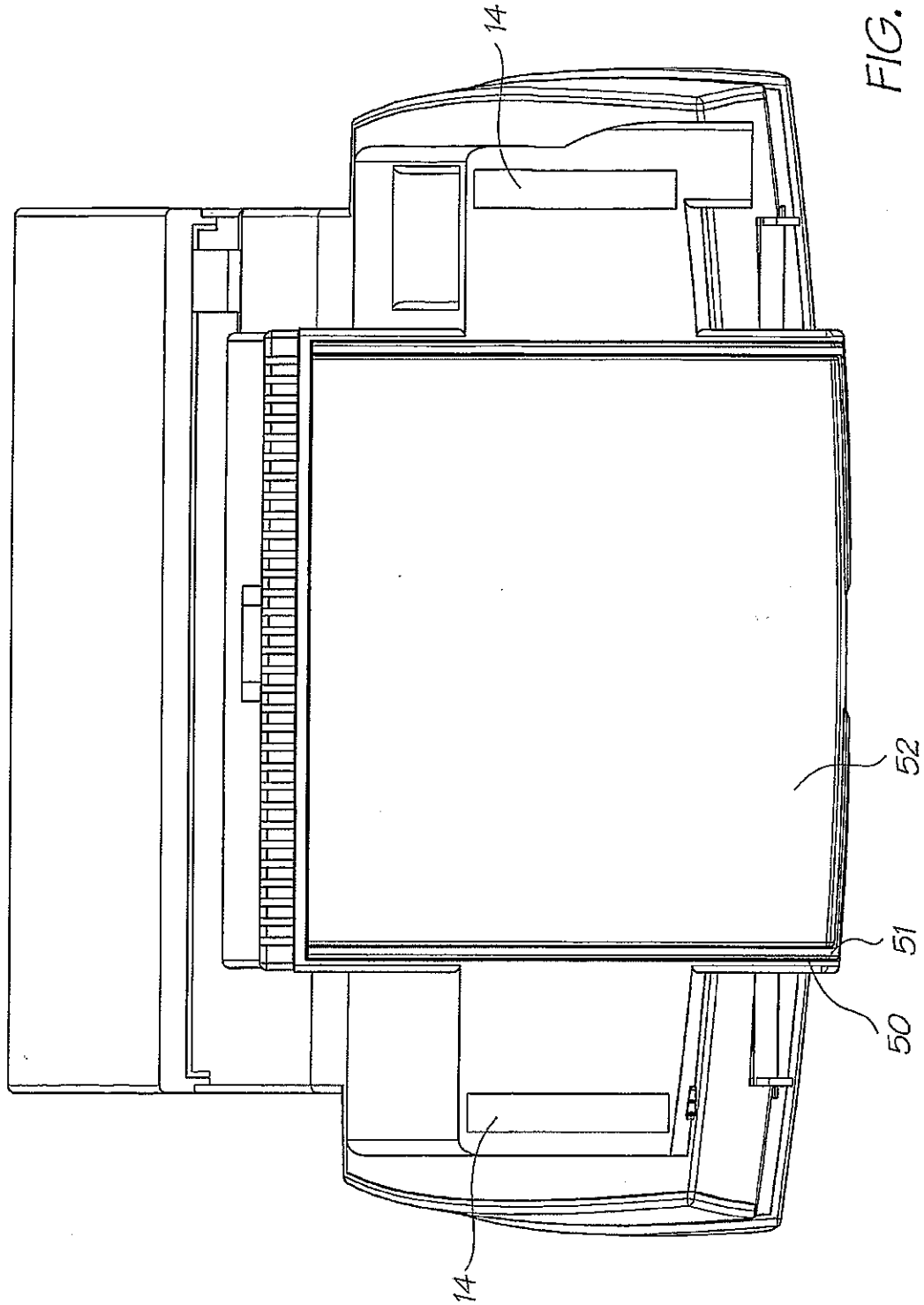

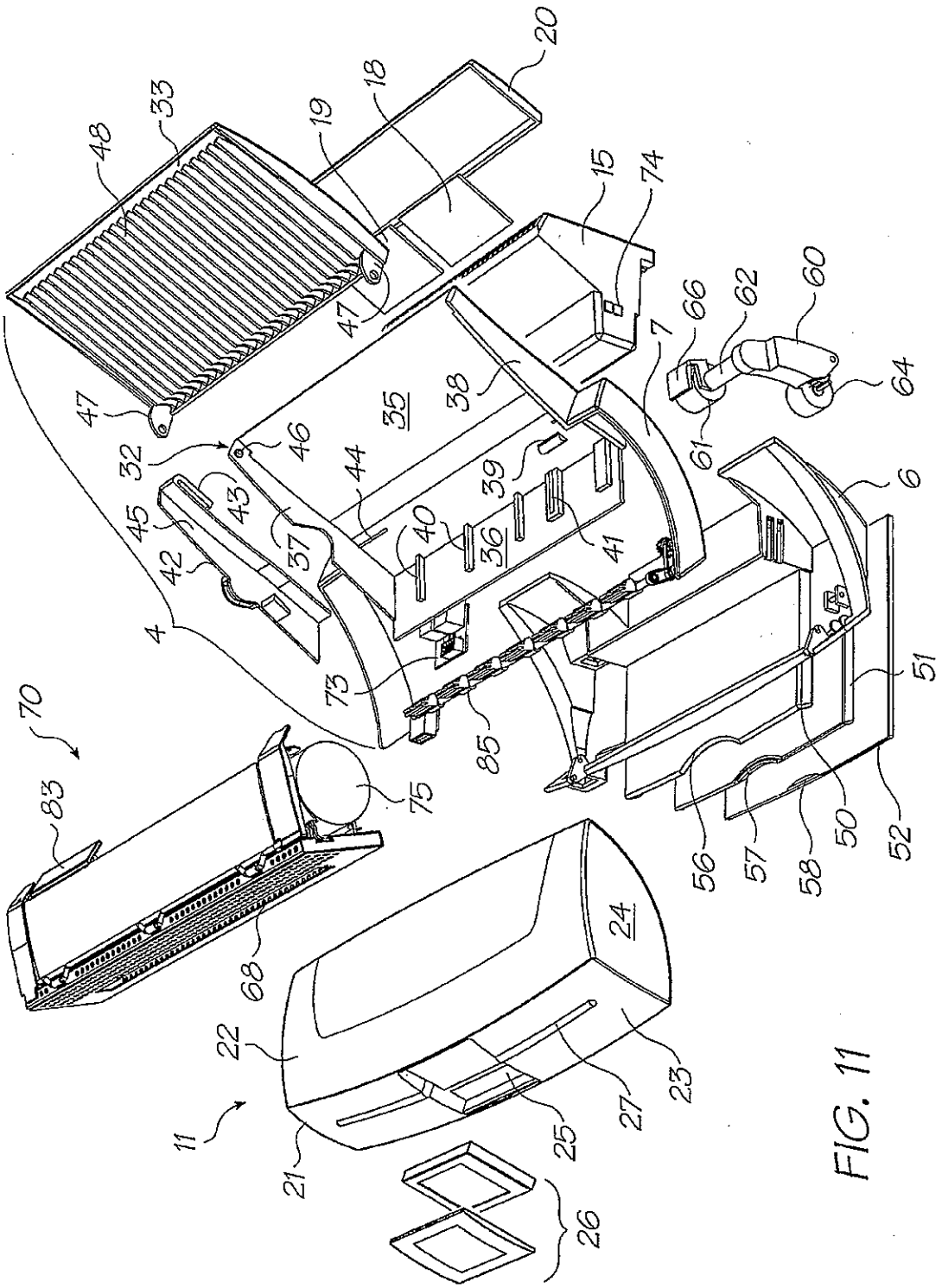
20
18
19
33
48
15
74
47
47
66
62
60
64
61
7
38
35
32
46
44
39
43
45
37
40
36
41
42
4
6
73
85
51
70
83
75
56
57
58
50
52
68
24
22
23
27
25
11
21
26

FIG. 11

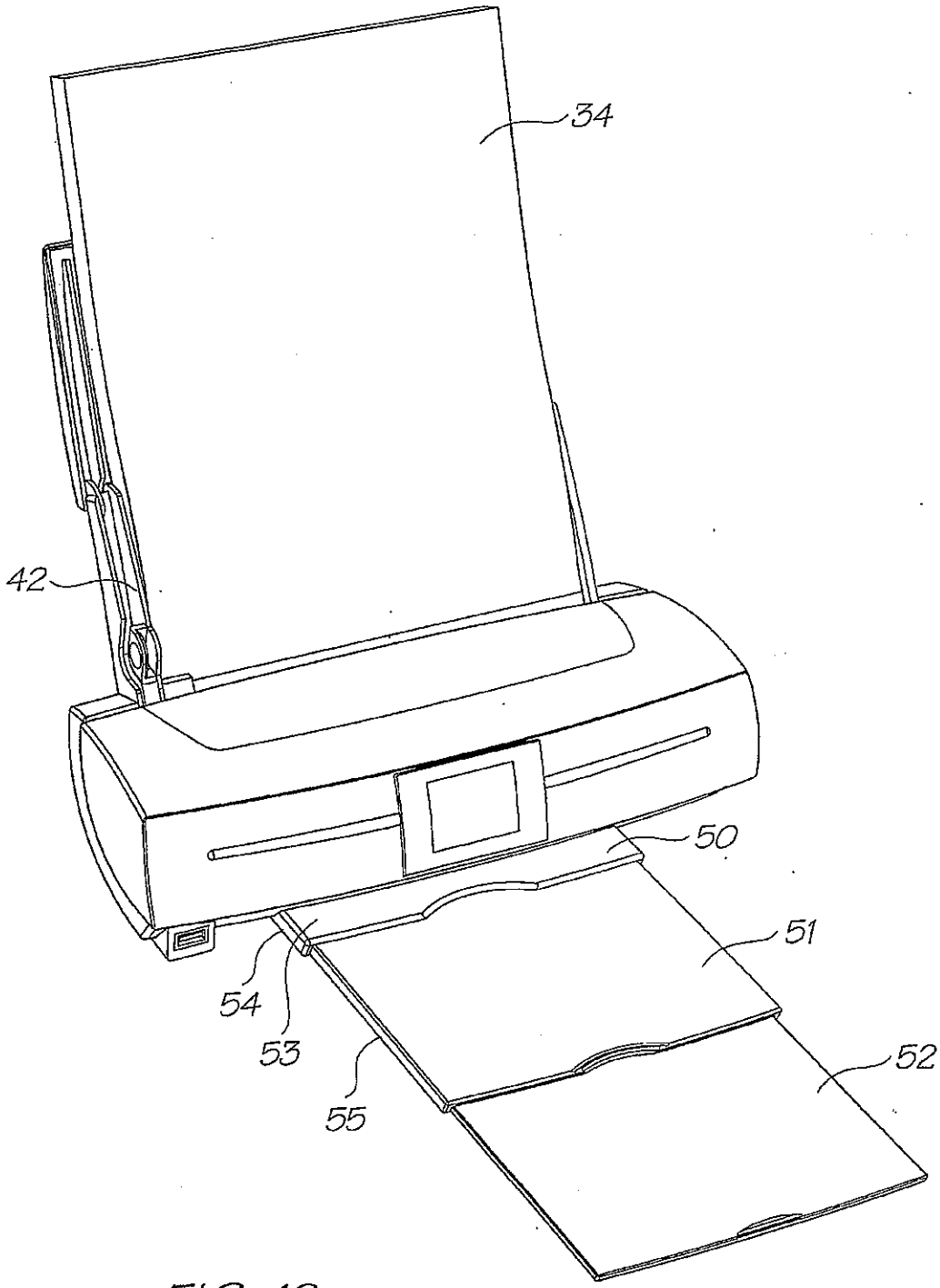

FIG. 12

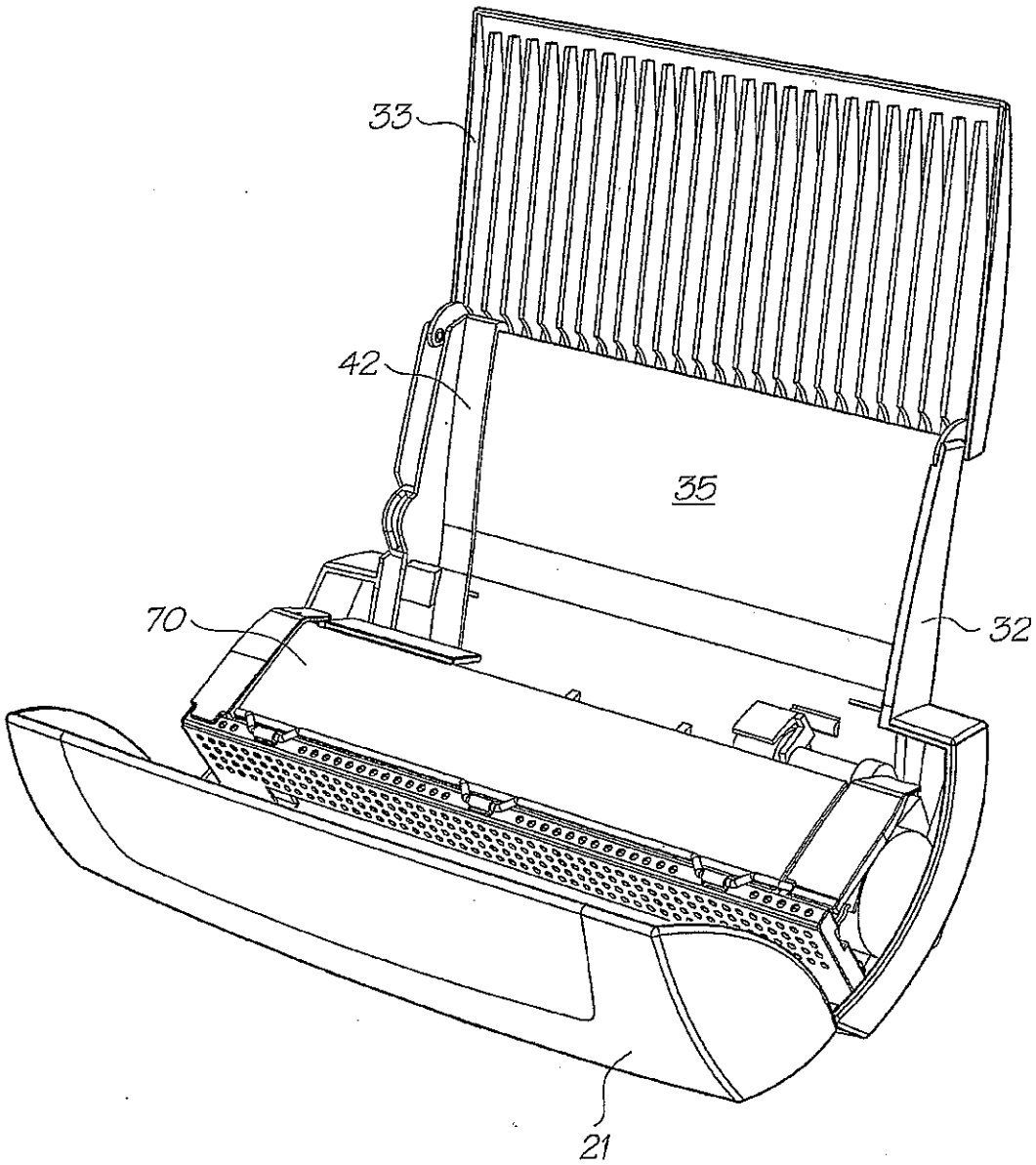

FIG. 13

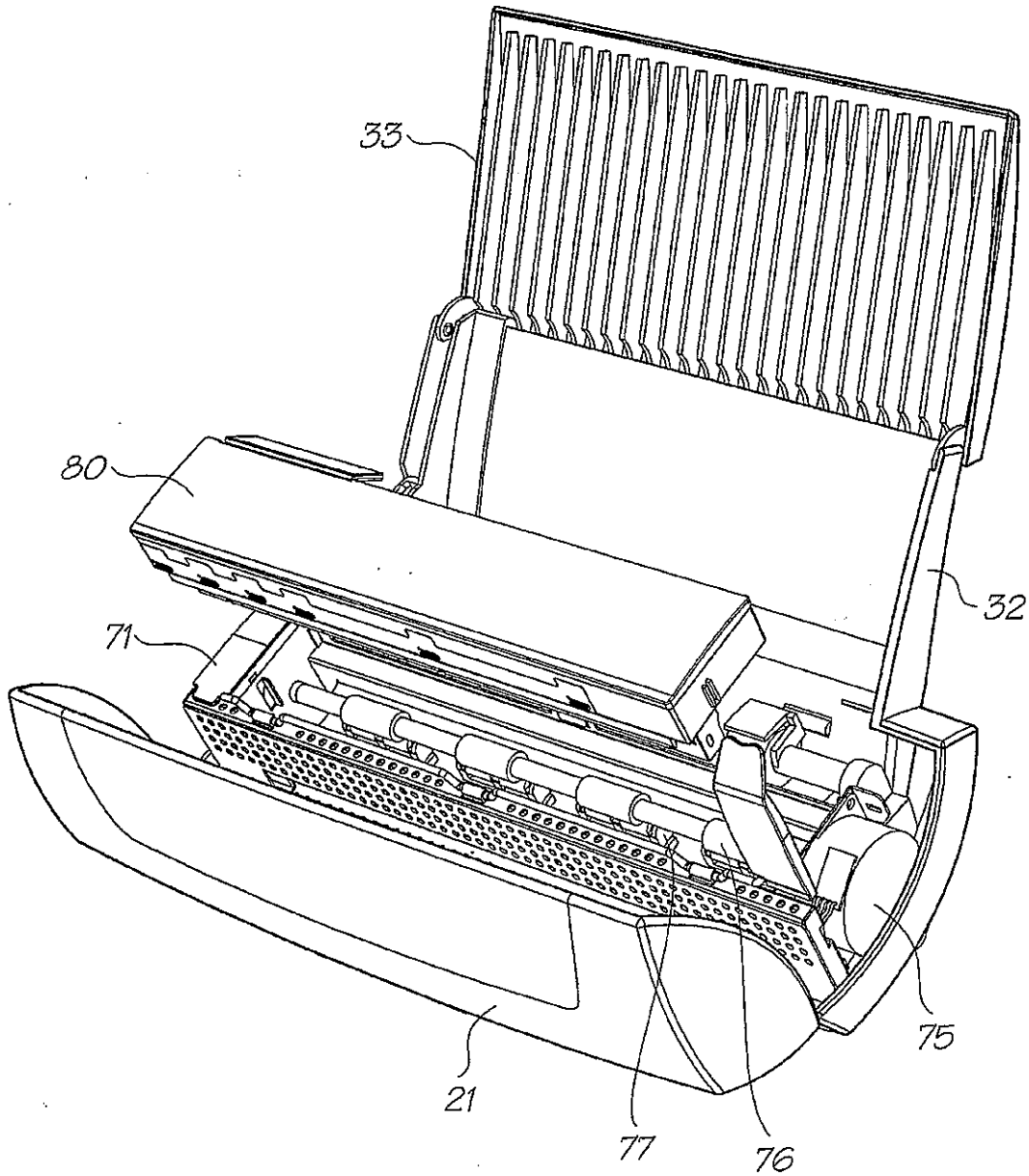

FIG. 14

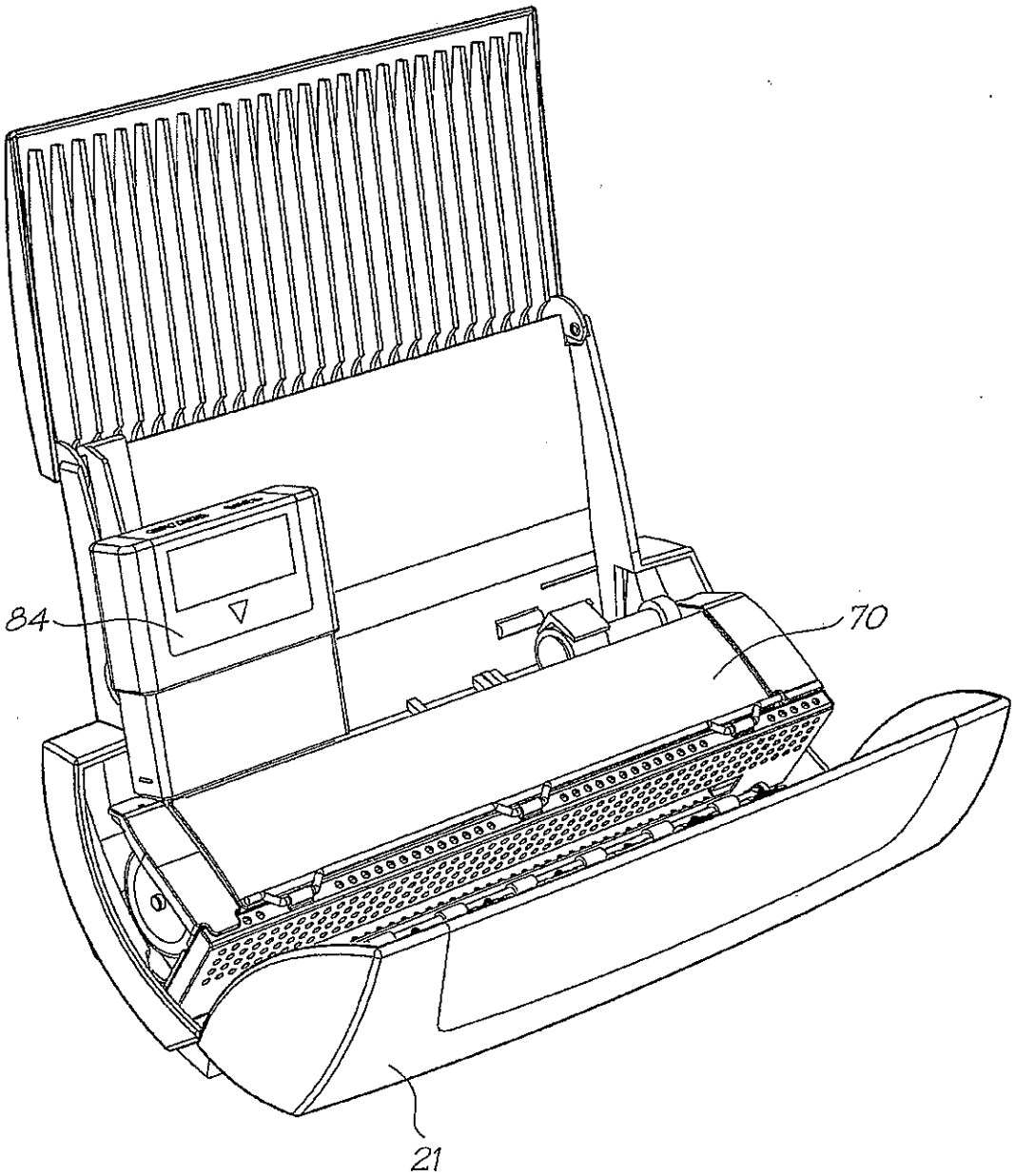

FIG. 15

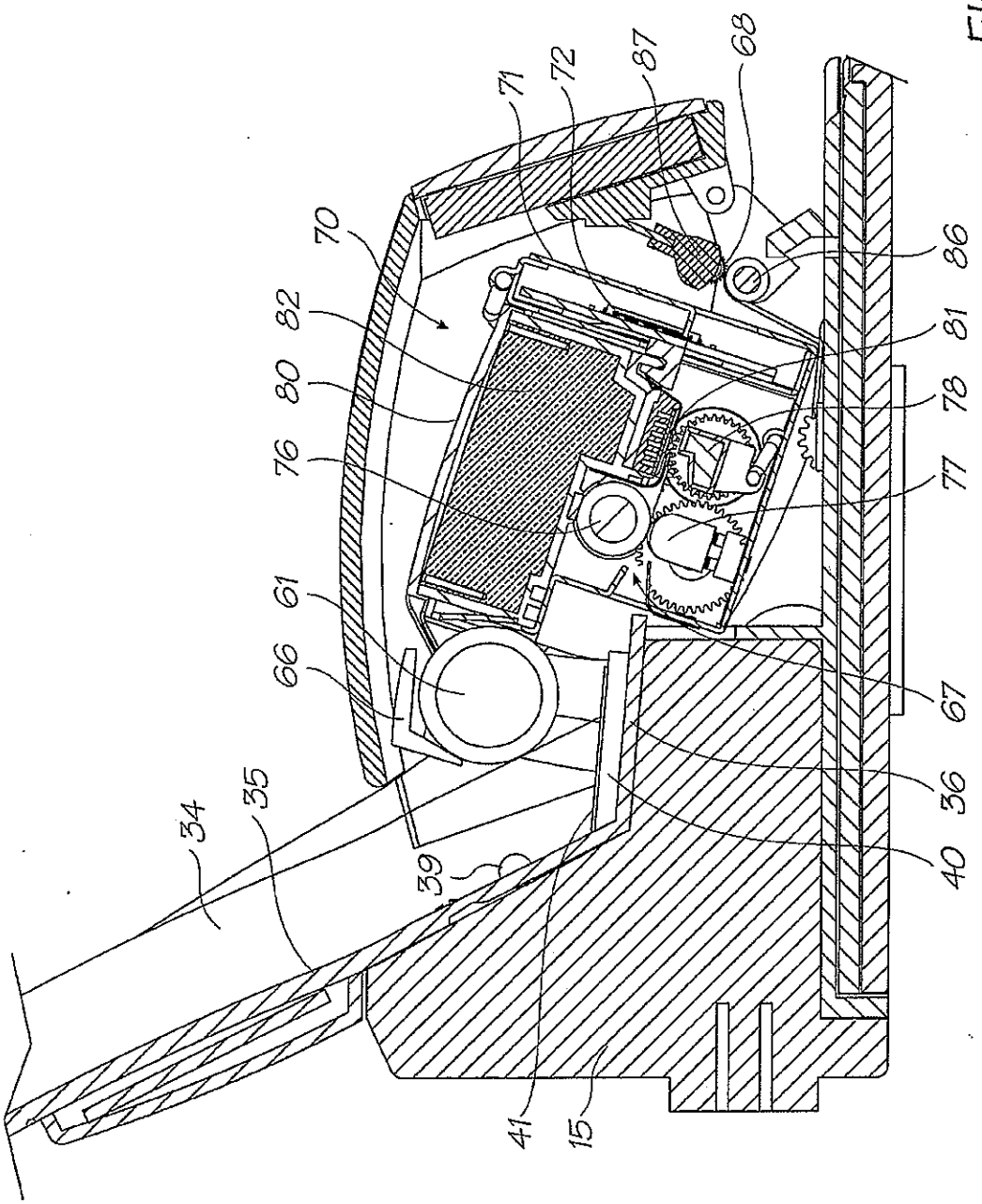

FIG. 16

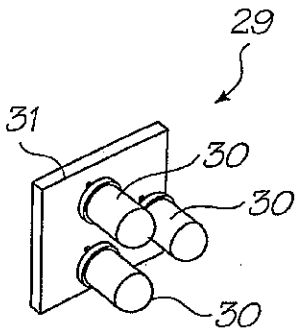

FIG. 17a

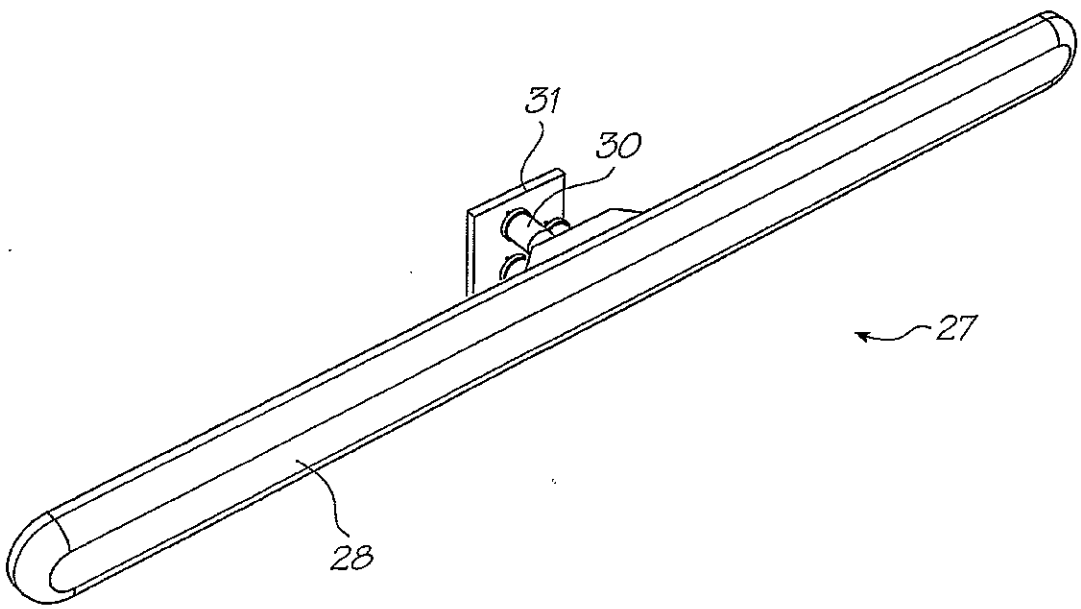

FIG. 17b

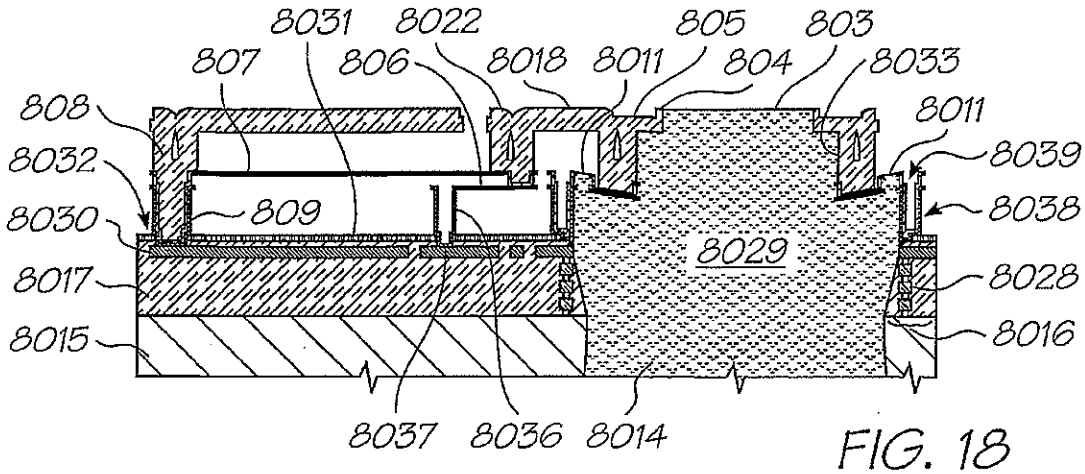

FIG. 18

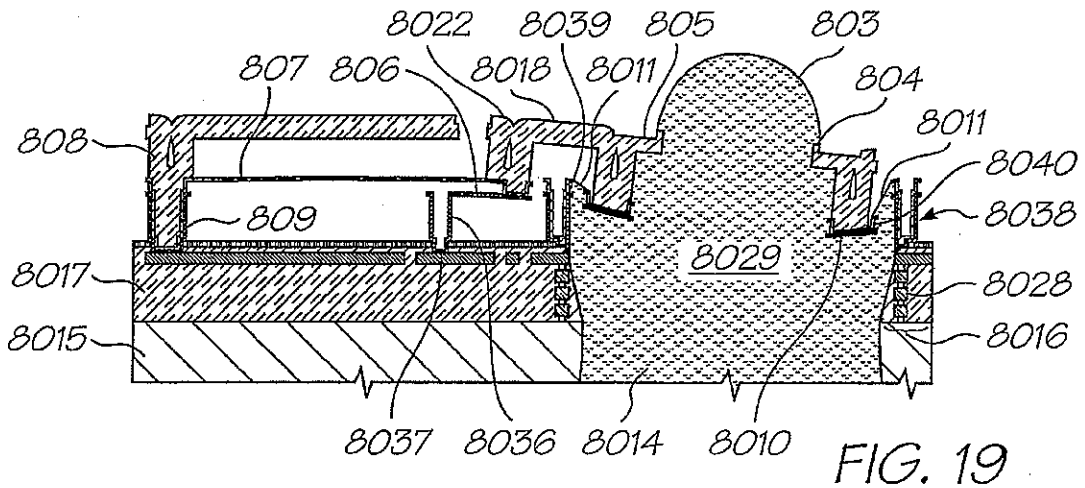

FIG. 19

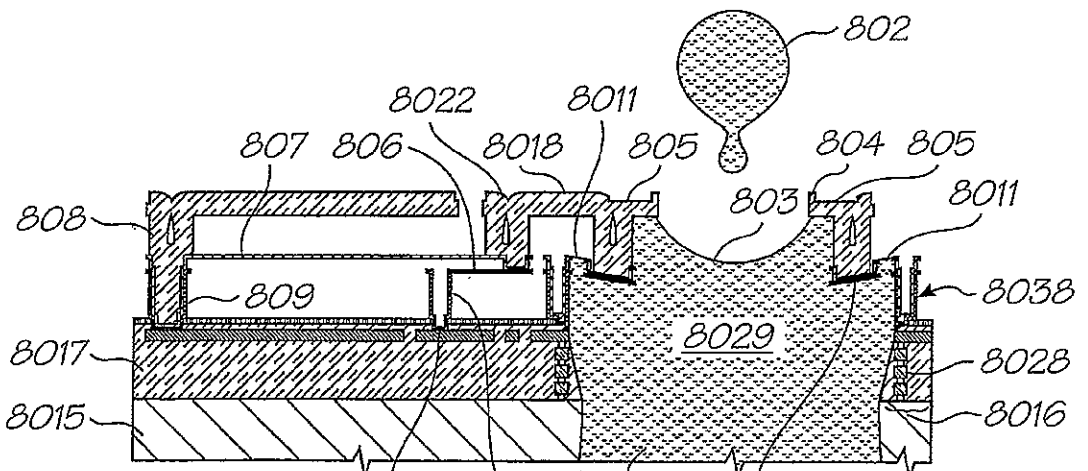

FIG. 20

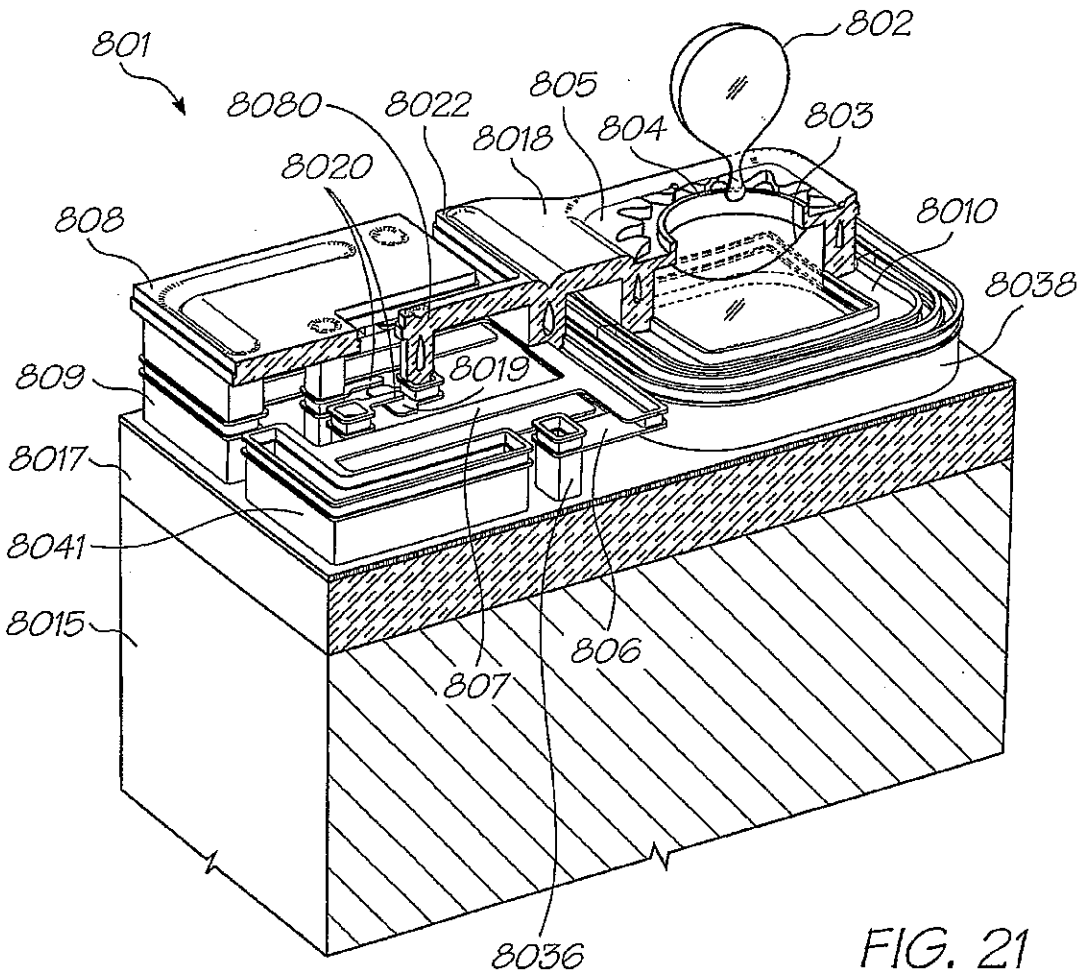
801
802
8080
8022
805
804
803
8018
8020
808
8010
8038
809
8019
8017
8041
8015
806
807
8036

FIG. 21

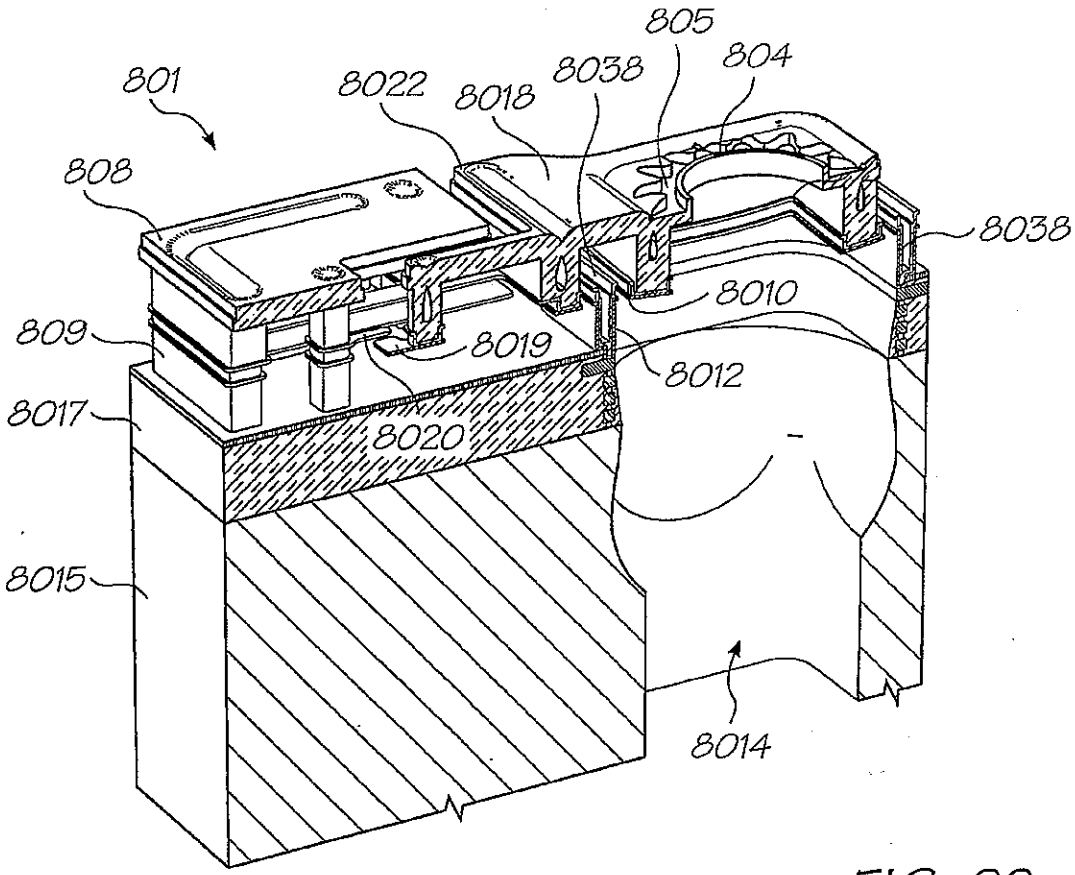
801
8022
8018
8038
805
804
808
8038
8010
809
8019
8012
8017
8020
8015
8014

FIG. 22

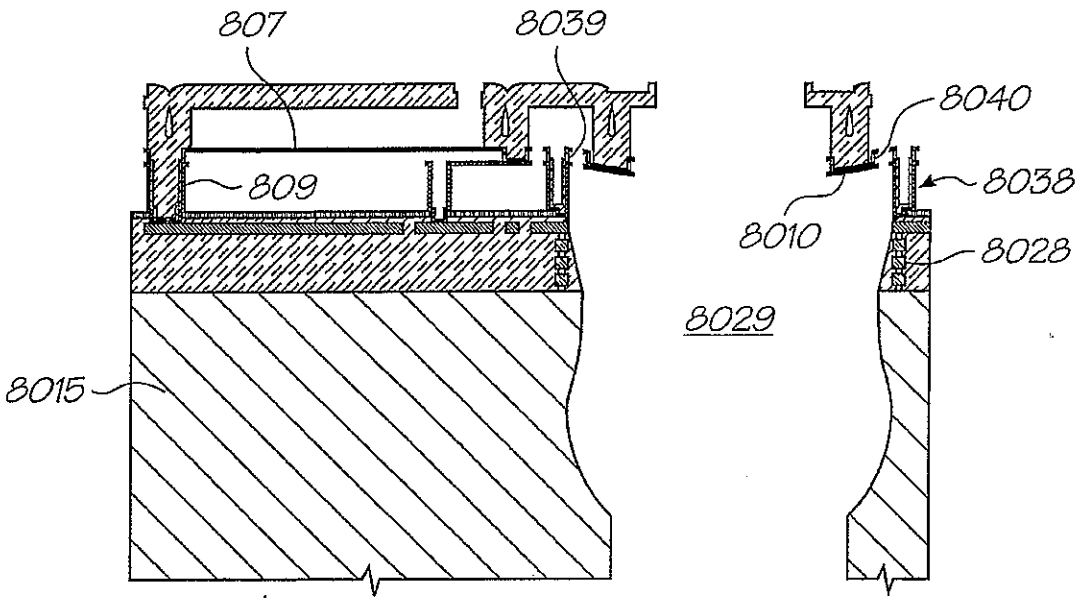
807
8039
809
8015
8040
8038
8010
8028
8029

FIG. 23

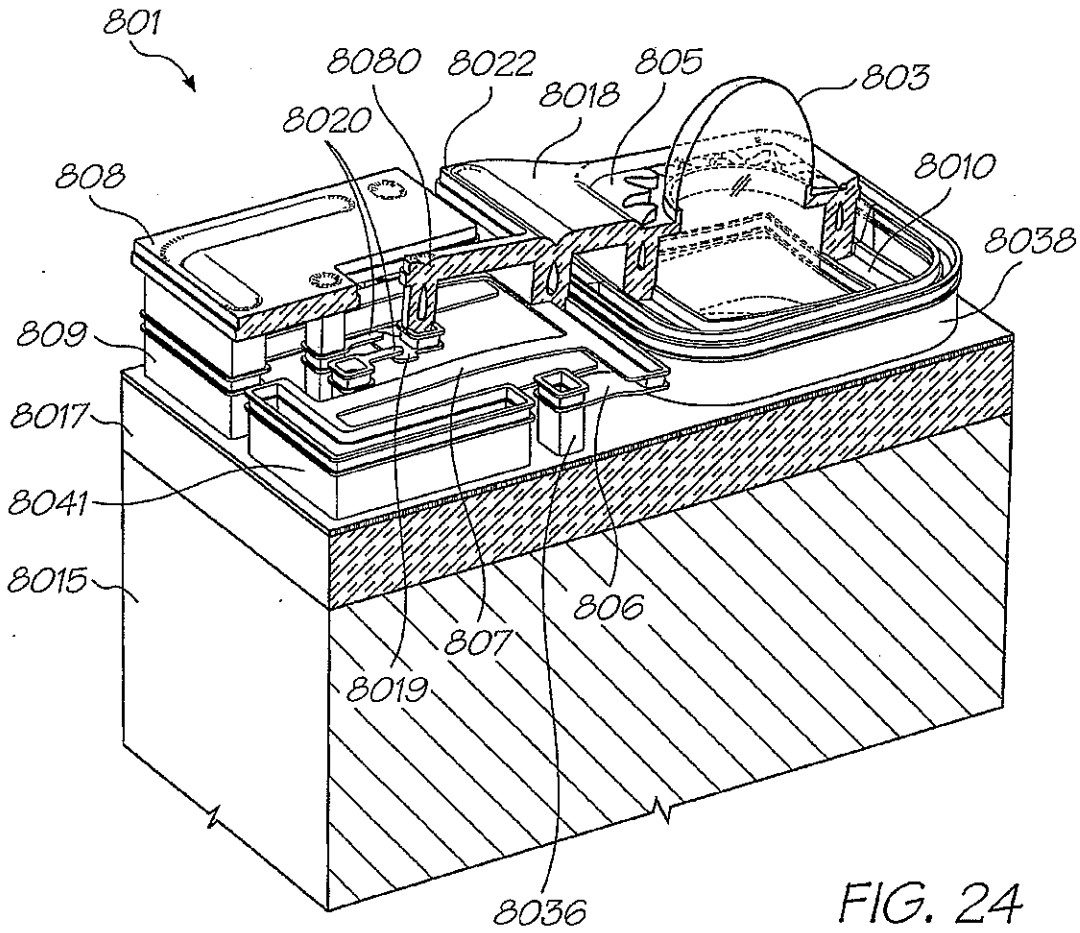
801
8080
8022
805
803
8018
8020
808
8010
8038
809
8017
8041
8015
806
807
8019
8036

FIG. 24

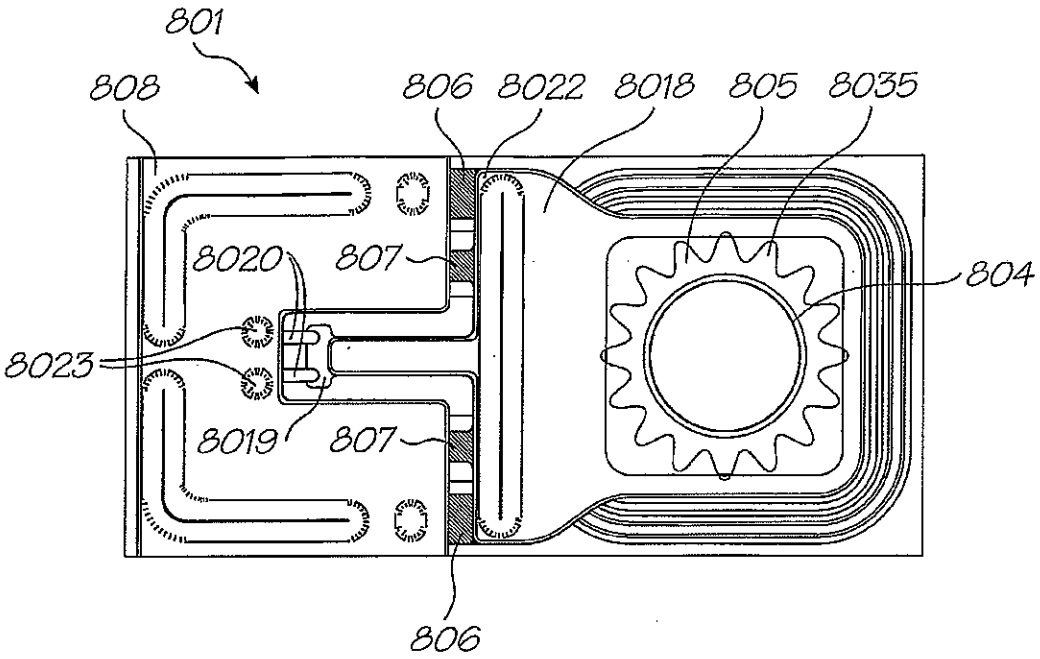
801
808
806
8022
8018
805
8035
8020
807
804
8023
8019
807
806

FIG. 25

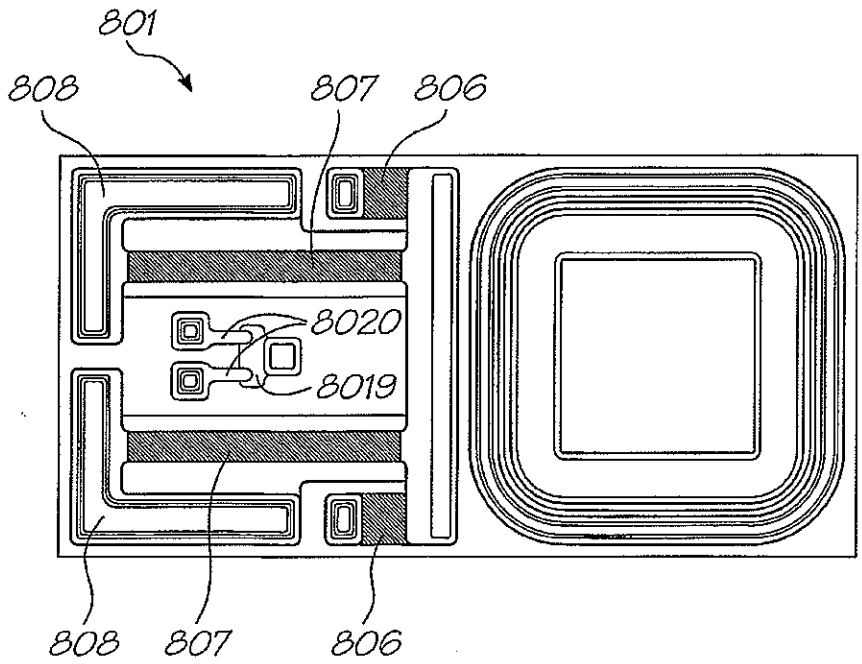
801
808
807
806
8020
8019
808
807
806

FIG. 26

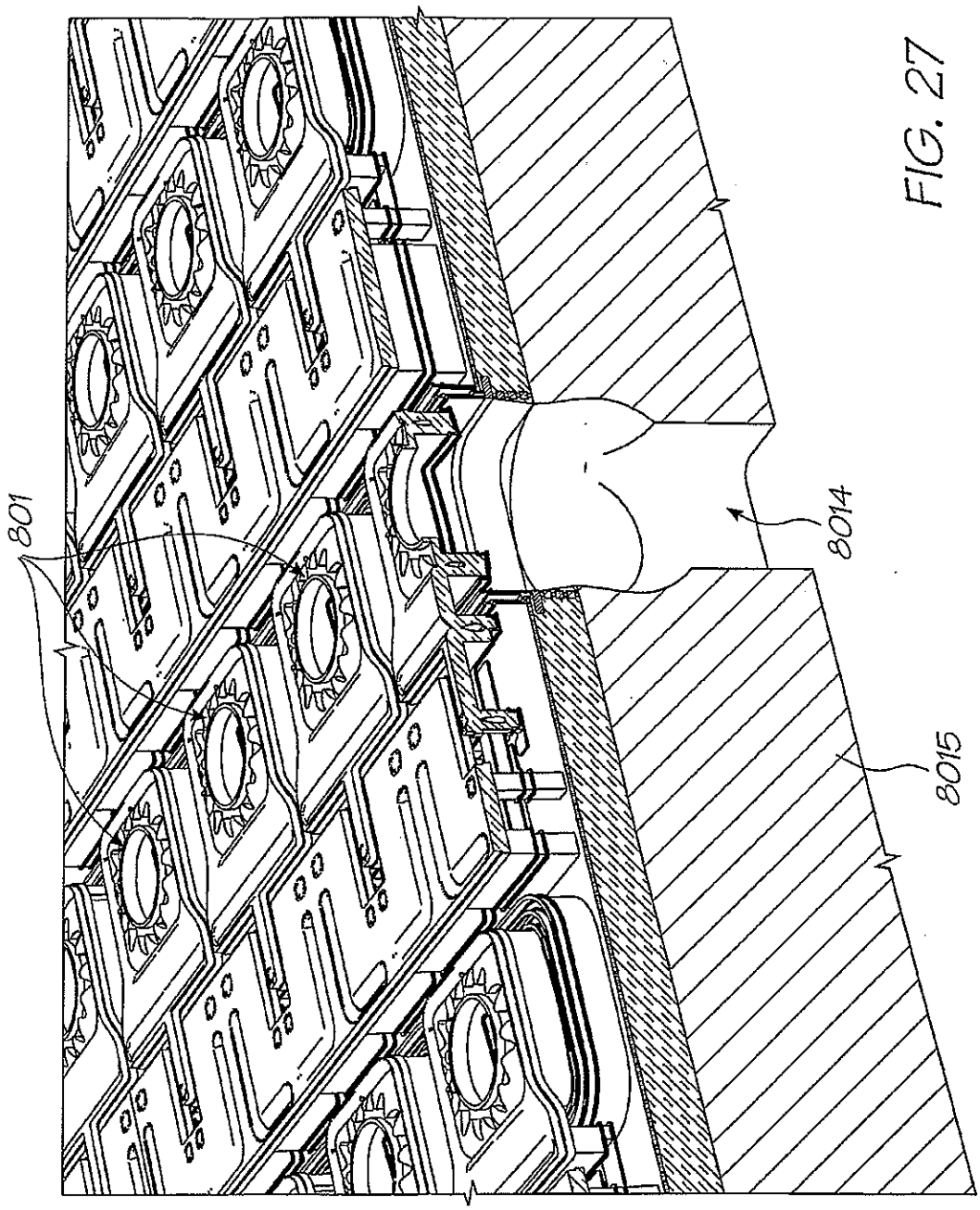

FIG. 27

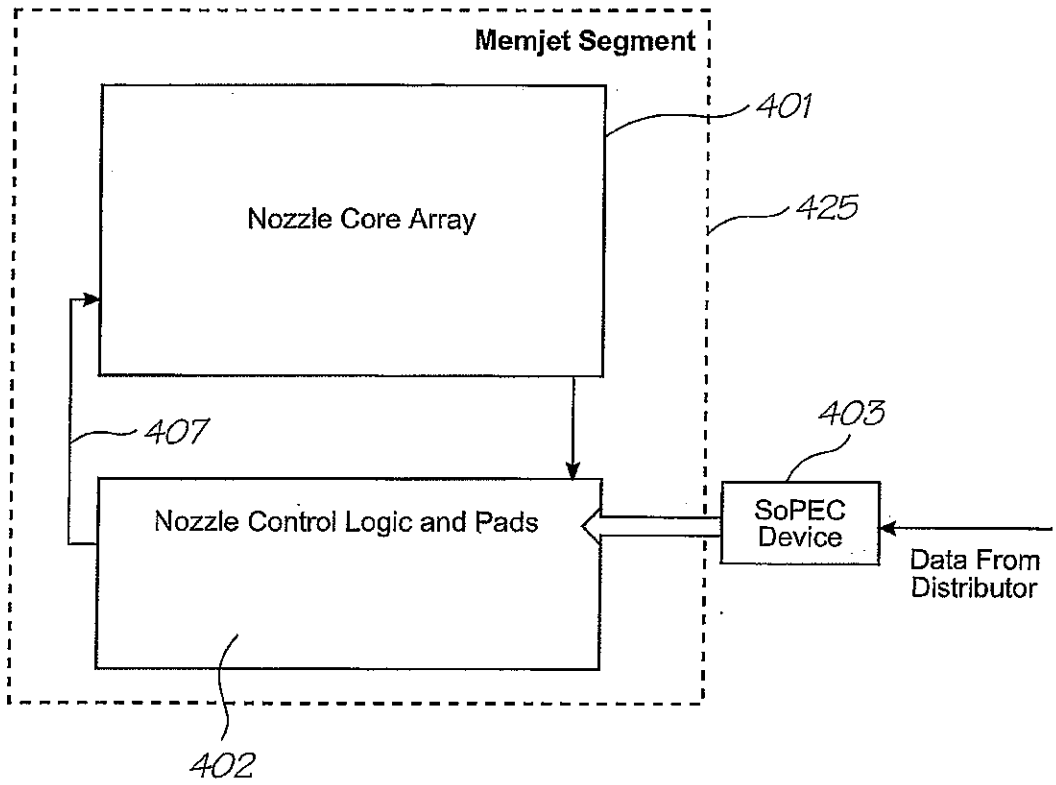
Memjet Segment
401
Nozzle Core Array
425
407
403
Nozzle Control Logic and Pads
SoPEC Device
Data From Distributor
402

FIG. 28

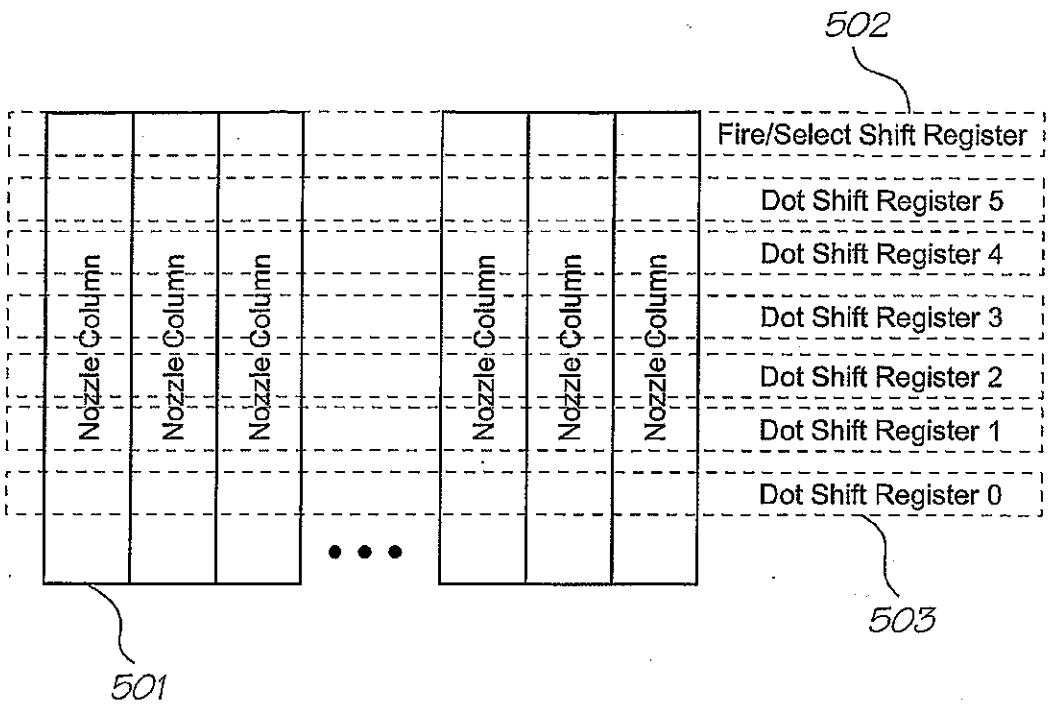
502
Fire/Select Shift Register
Dot Shift Register 5
Dot Shift Register 4
Dot Shift Register 3
Dot Shift Register 2
Dot Shift Register 1
Dot Shift Register 0
Nozzle Column
Nozzle Column
Nozzle Column
Nozzle Column
Nozzle Column
Nozzle Column
503
501

FIG. 29

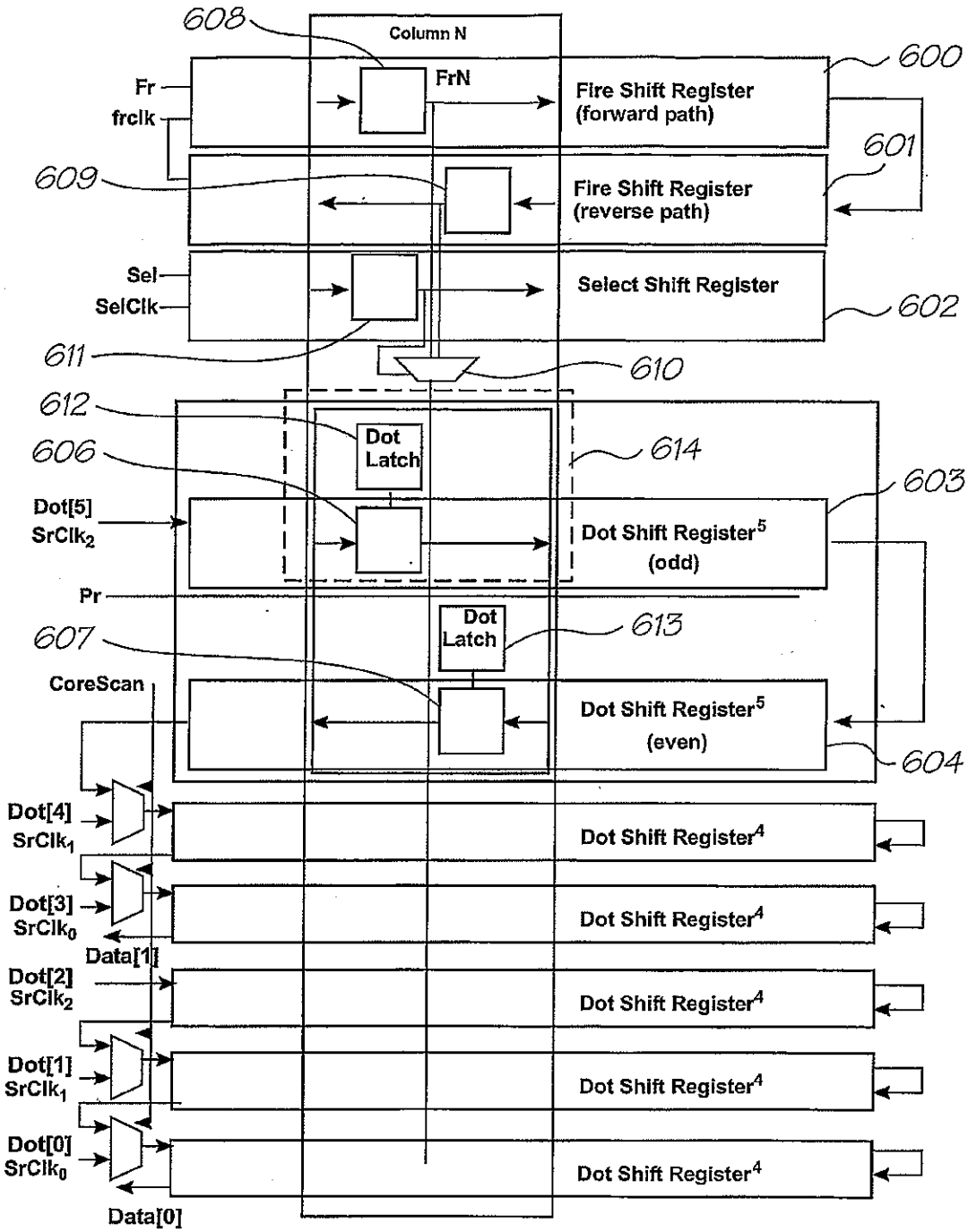
608
Column N
600
Fr
frclk
FrN
Fire Shift Register
(forward path)
601
609
Fire Shift Register
(reverse path)
Sel
SelClk
Select Shift Register
602
611
610
612
Dot
Latch
614
606
603
Dot[5]
SrClk2
Dot Shift Register5
(odd)
Pr
Dot
Latch
613
607
CoreScan
Dot Shift Register5
(even)
604
Dot[4]
SrClk1
Dot Shift Register4
Dot[3]
SrClk0
Data[1]
Dot Shift Register4
Dot[2]
SrClk2
Dot Shift Register4
Dot[1]
SrClk1
Dot Shift Register4
Dot[0]
SrClk0
Dot Shift Register4
Data[0]

FIG. 30

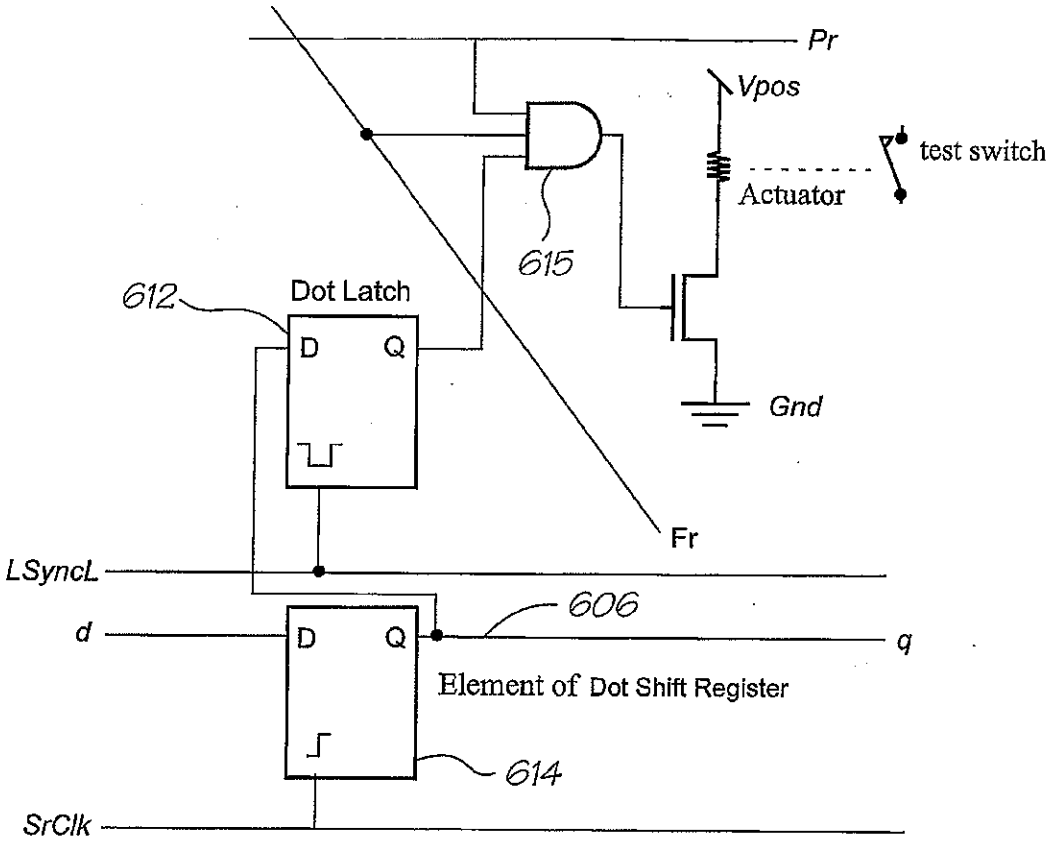
Pr
Vpos
test switch
Actuator
615
612
Dot Latch
D
Q
Gnd
Fr
LSyncL
606
d
D
Q
q
Element of Dot Shift Register
614
SrClk

FIG. 31