(12) INTERNATIONAL APPLICATION PUBLISHED UNDER THE PATENT COOPERATION TREATY (PCT)

(19) World Intellectual Property Organization
International Bureau

(43) International Publication Date
27 October 2022 (27.10.2022)

WIPO | PCT

(10) International Publication Number
WO 2022/225797 A1

(51) International Patent Classification:
C23C 16/458 (2006.01) *C23C 16/44* (2006.01)
C23C 16/455 (2006.01)

(21) International Application Number:
PCT/US2022/024938

(22) International Filing Date:
15 April 2022 (15.04.2022)

(25) Filing Language: English

(26) Publication Language: English

(30) Priority Data:
63/177,617 21 April 2021 (21.04.2021) US

(71) Applicant: **LAM RESEARCH CORPORATION** [US/US]; 4650 Cushing Parkway, Fremont, California 94538 (US).

(72) Inventors: **GAGE, Christopher**; 14383 Russell Valley Road, Truckee, California 96161 (US). **CHANDRASEKHARAN, Ramesh**; 2357 Hillside Ln, Lake Oswego, Oregon 97034 (US). **LENZ, Eric H.**; 2975 San Minete Drive, Livermore, California 94550 (US). **LEESER, Karl Frederick**; 22675 Johnson Road, West Linn, Oregon 97068 (US).

(74) Agent: **WIGGINS, Michael D.** et al.; Harness, Dickey & Pierce, P.L.C., 5445 Corporate Drive, Suite 200, Troy, Michigan 48098 (US).

(81) Designated States *(unless otherwise indicated, for every kind of national protection available)*: AE, AG, AL, AM, AO, AT, AU, AZ, BA, BB, BG, BH, BN, BR, BW, BY, BZ, CA, CH, CL, CN, CO, CR, CU, CZ, DE, DJ, DK, DM, DO, DZ, EC, EE, EG, ES, FI, GB, GD, GE, GH, GM, GT, HN, HR, HU, ID, IL, IN, IR, IS, IT, JM, JO, JP, KE, KG, KH, KN, KP, KR, KW, KZ, LA, LC, LK, LR, LS, LU, LY, MA, MD, ME, MG, MK, MN, MW, MX, MY, MZ, NA, NG, NI,

WO 2022/225797 A1

(54) Title: BACKSIDE DEPOSITION PREVENTION ON SUBSTRATES

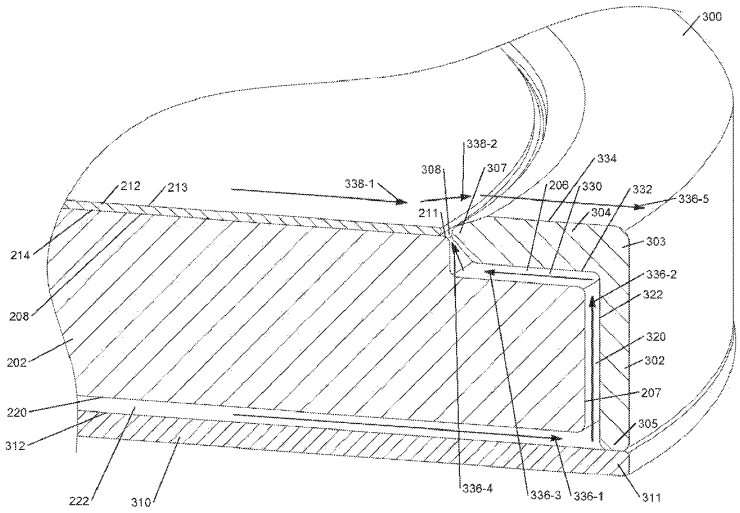

FIG. 3

(57) Abstract: Various systems and methods are provided to prevent backside deposition on a substrate by using a combination of approaches. The approaches include clamping the substrate to a pedestal and/or supplying purge gases to an area where deposition is not desired. The clamping methods include electrostatic or vacuum clamping. In addition, various pedestal and edge ring designs are provided for supplying purge gases to the area where deposition is not desired. The use of clamping in conjunction with purging can further enhance the performance without affecting deposition of materials on front side of the substrate. The clamping along the edge of the substrate can be made more effective by machining an upper surface of the pedestal to have a slight dish or dome like shape (i.e., concave or convex, respectively).

[Continued on next page]

NO, NZ, OM, PA, PE, PG, PH, PL, PT, QA, RO, RS, RU, RW, SA, SC, SD, SE, SG, SK, SL, ST, SV, SY, TH, TJ, TM, TN, TR, TT, TZ, UA, UG, US, UZ, VC, VN, WS, ZA, ZM, ZW.

(84) **Designated States** *(unless otherwise indicated, for every kind of regional protection available)*: ARIPO (BW, GH, GM, KE, LR, LS, MW, MZ, NA, RW, SD, SL, ST, SZ, TZ, UG, ZM, ZW), Eurasian (AM, AZ, BY, KG, KZ, RU, TJ, TM), European (AL, AT, BE, BG, CH, CY, CZ, DE, DK, EE, ES, FI, FR, GB, GR, HR, HU, IE, IS, IT, LT, LU, LV, MC, MK, MT, NL, NO, PL, PT, RO, RS, SE, SI, SK, SM, TR), OAPI (BF, BJ, CF, CG, CI, CM, GA, GN, GQ, GW, KM, ML, MR, NE, SN, TD, TG).

Declarations under Rule 4.17:

— *of inventorship (Rule 4.17(iv))*

Published:

— *with international search report (Art. 21(3))*

— *before the expiration of the time limit for amending the claims and to be republished in the event of receipt of amendments (Rule 48.2(h))*