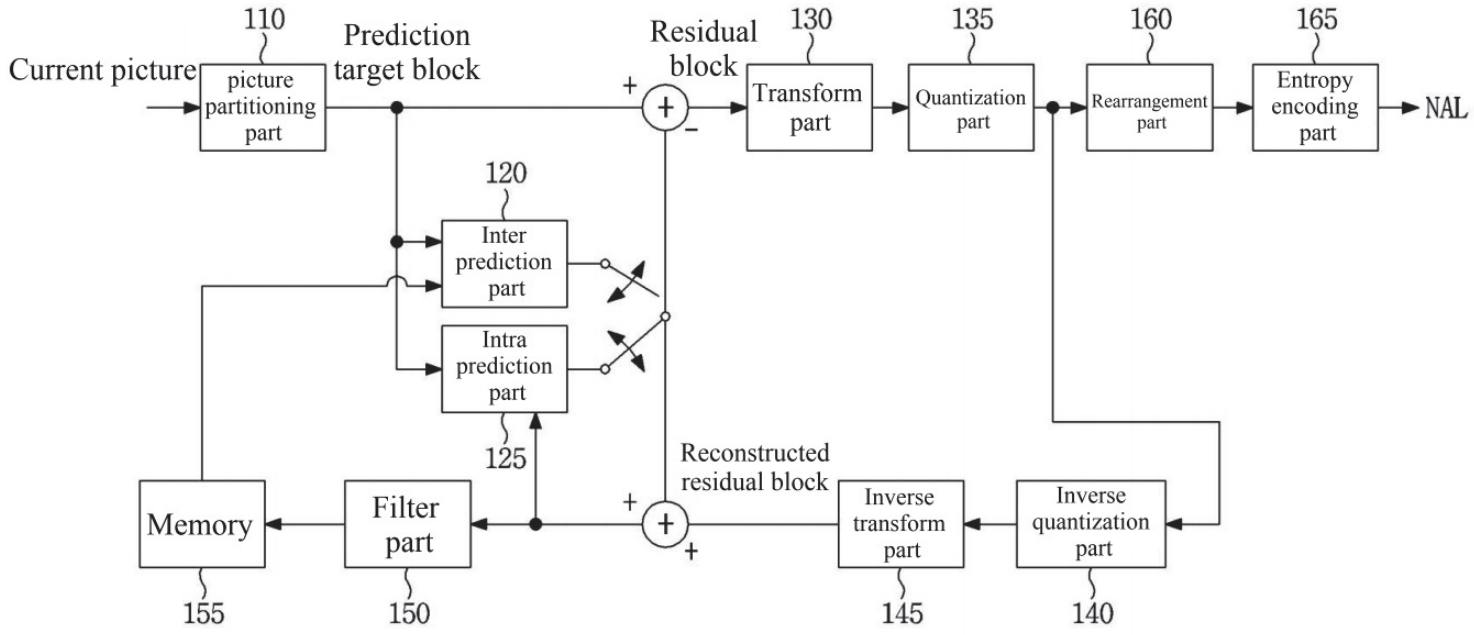
Current picture
110
picture partitioning part
Prediction target block
Residual block
130
Transform part
135
Quantization part
160
Rearrangement part
165
Entropy encoding part
NAL
120
Inter prediction part
Intra prediction part
125
Reconstructed residual block
Memory
155
Filter part
150
Inverse transform part
145
Inverse quantization part
140

Fig. 1

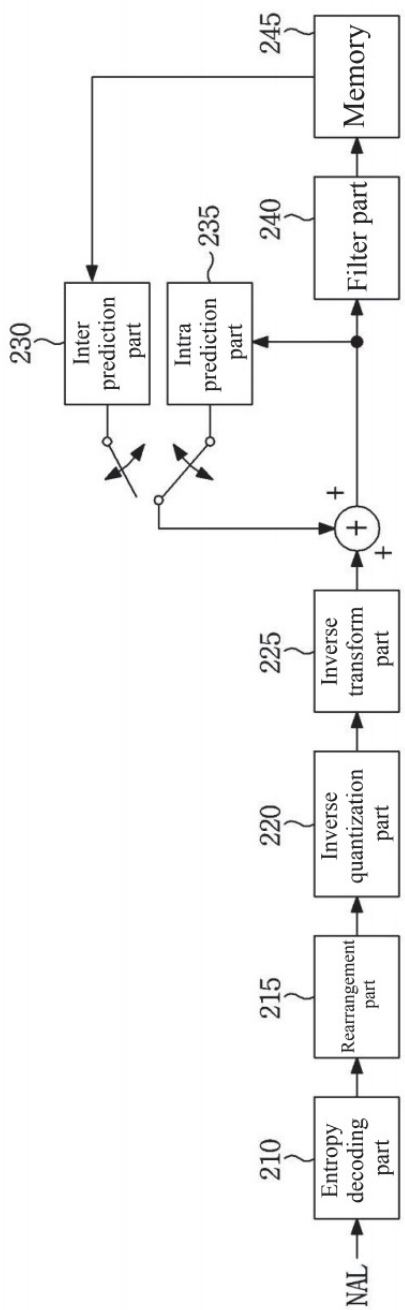
NAL
Entropy decoding part
210
Rearrangement part
215
Inverse quantization part
220
Inverse transform part
225
+
+
+
Inter prediction part
230
Intra prediction part
235
Filter part
240
Memory
245

Fig. 2

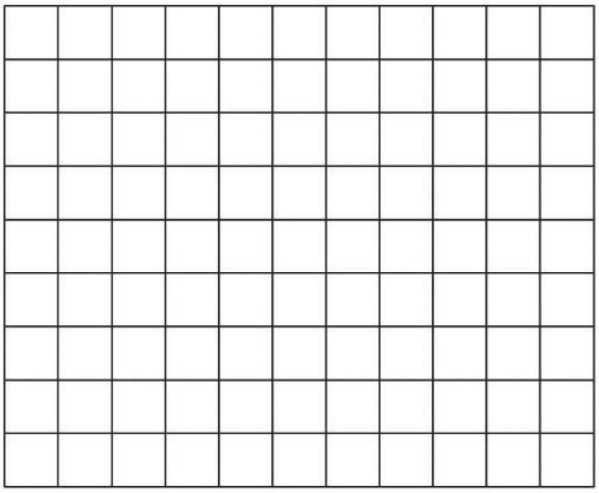

Fig. 3

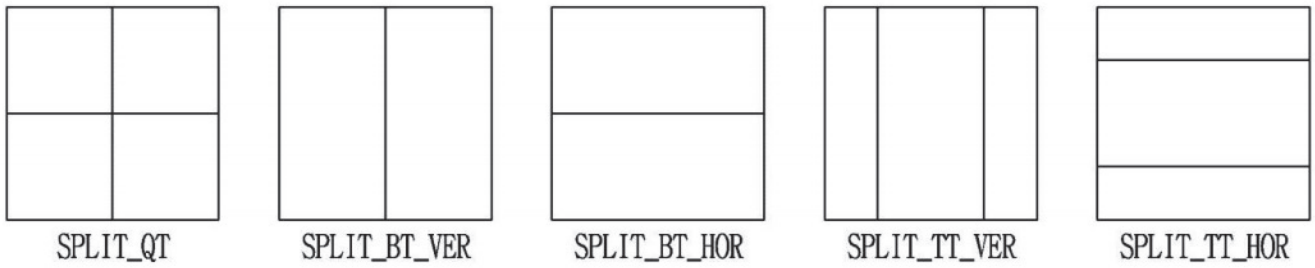

Fig. 4

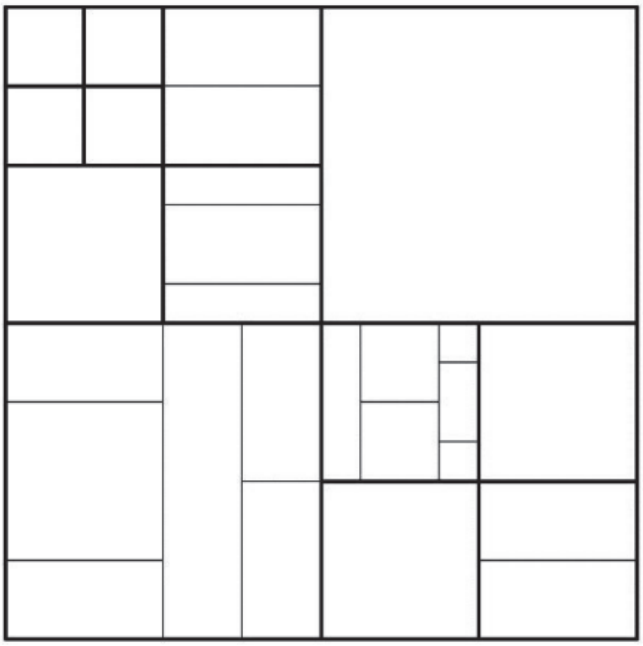

Fig. 5

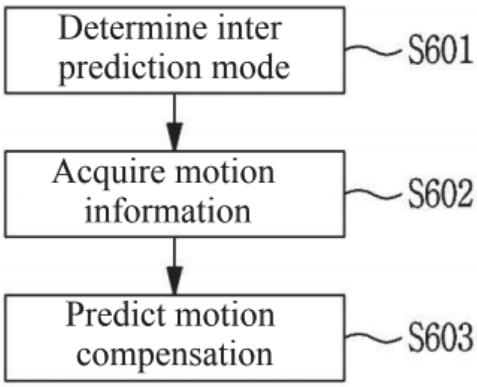
Determine inter prediction mode
S601
Acquire motion information
S602
Predict motion compensation
S603

Fig. 6

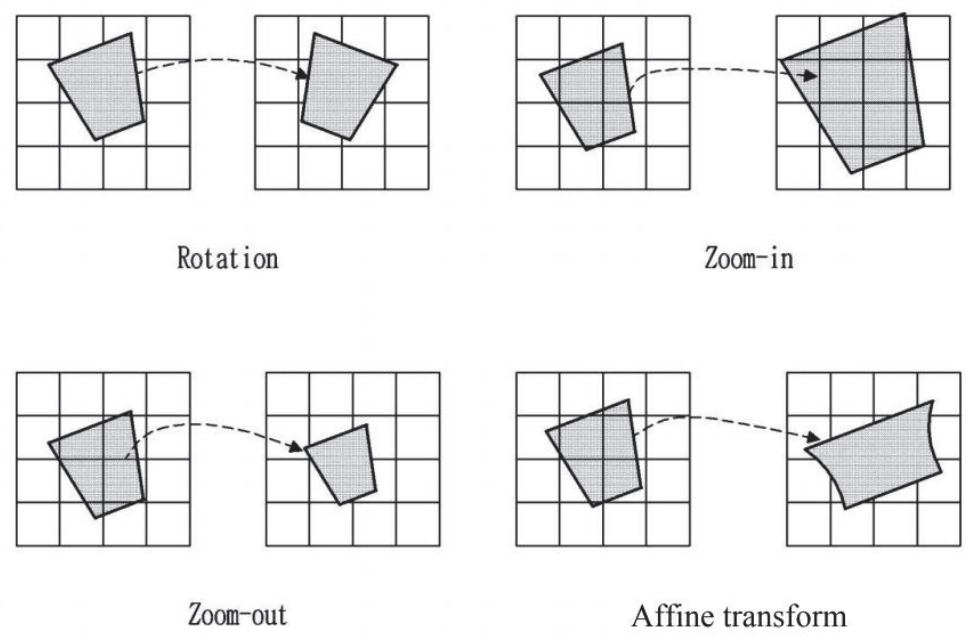
Rotation
Zoom-in
Zoom-out
Affine transform

Fig. 7

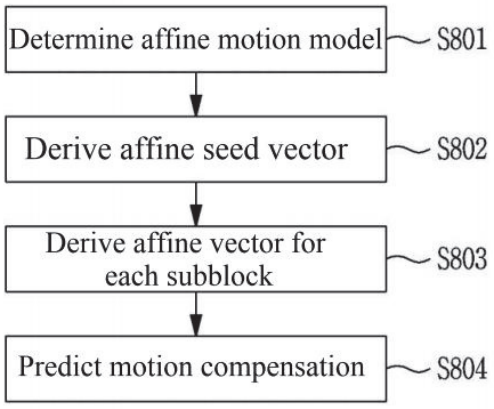
Determine affine motion model
S801
Derive affine seed vector
S802
Derive affine vector for each subblock
S803
Predict motion compensation
S804

Fig. 8

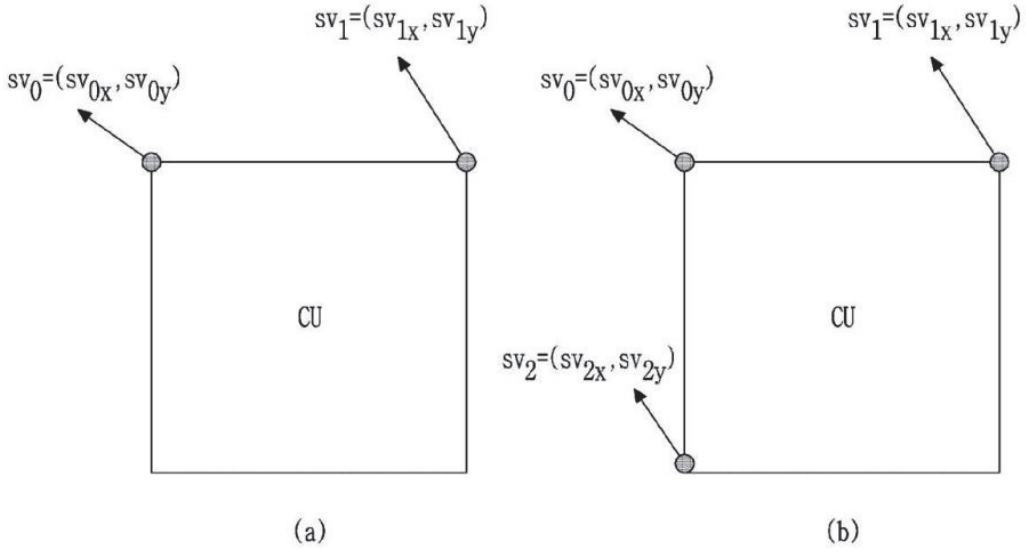
$sv_1=(sv_{1x}, sv_{1y})$
$sv_0=(sv_{0x}, sv_{0y})$
CU
(a)
$sv_1=(sv_{1x}, sv_{1y})$
$sv_0=(sv_{0x}, sv_{0y})$
CU
$sv_2=(sv_{2x}, sv_{2y})$
(b)

Fig. 9

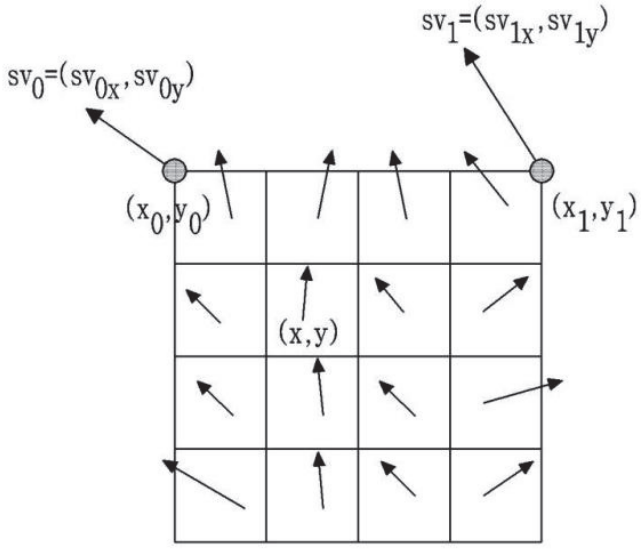
$sv_1=(sv_{1x}, sv_{1y})$
$sv_0=(sv_{0x}, sv_{0y})$
(x_0, y_0)
(x_1, y_1)
(x,y)

Fig. 10

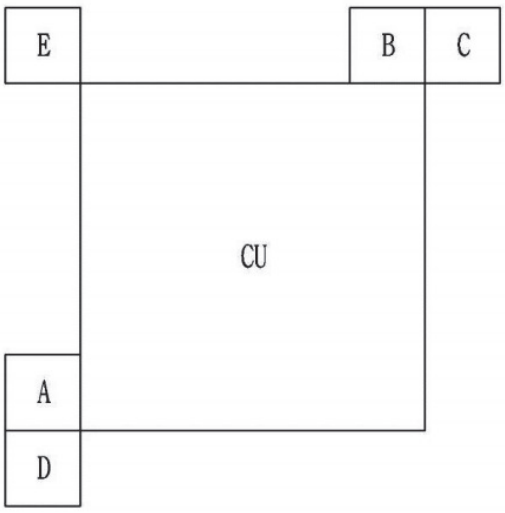
E
B
C
CU
A
D

Fig. 11

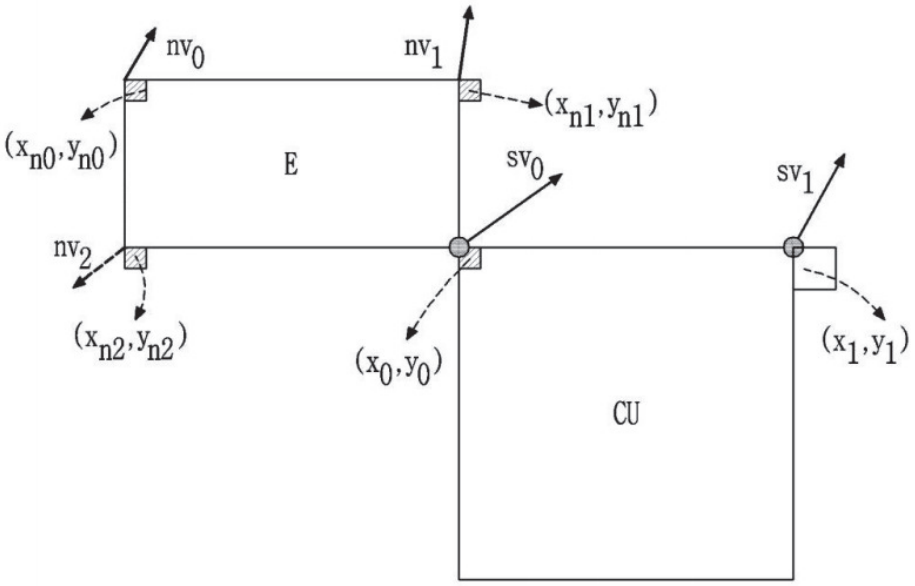
nv0
nv1
(xn1,yn1)
(xn0,yn0)
E
sv0
sv1
nv2
(xn2,yn2)
(x0,y0)
(x1,y1)
CU

Fig. 12

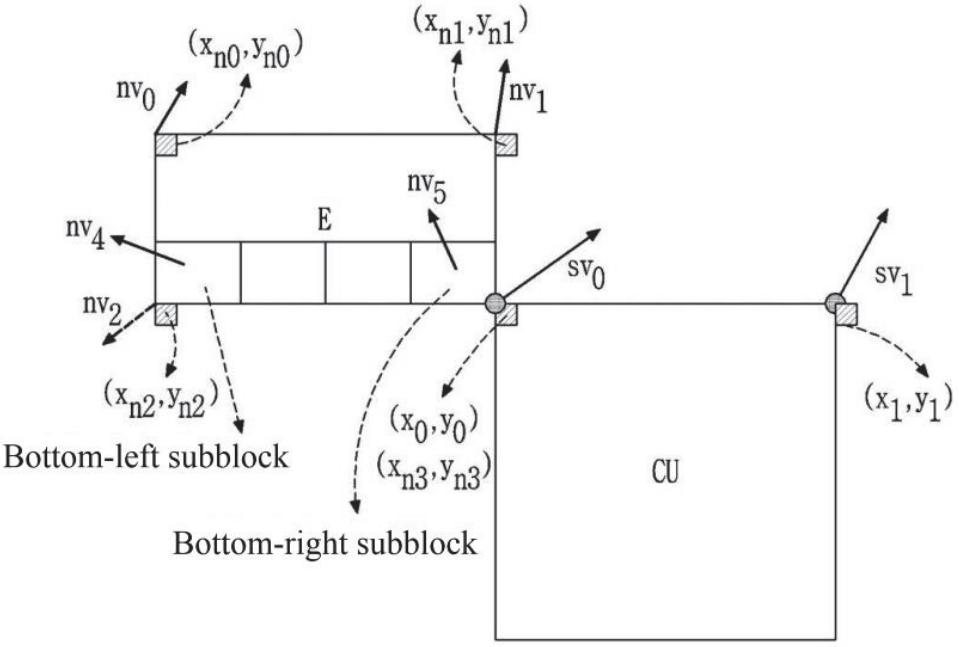
(x_{n1}, y_{n1})
(x_{n0}, y_{n0})
nv_0
nv_1
nv_5
E
nv_4
sv_0
sv_1
nv_2
(x_{n2}, y_{n2})
(x_0, y_0)
(x_1, y_1)
Bottom-left subblock
(x_{n3}, y_{n3})
CU
Bottom-right subblock

Fig. 13

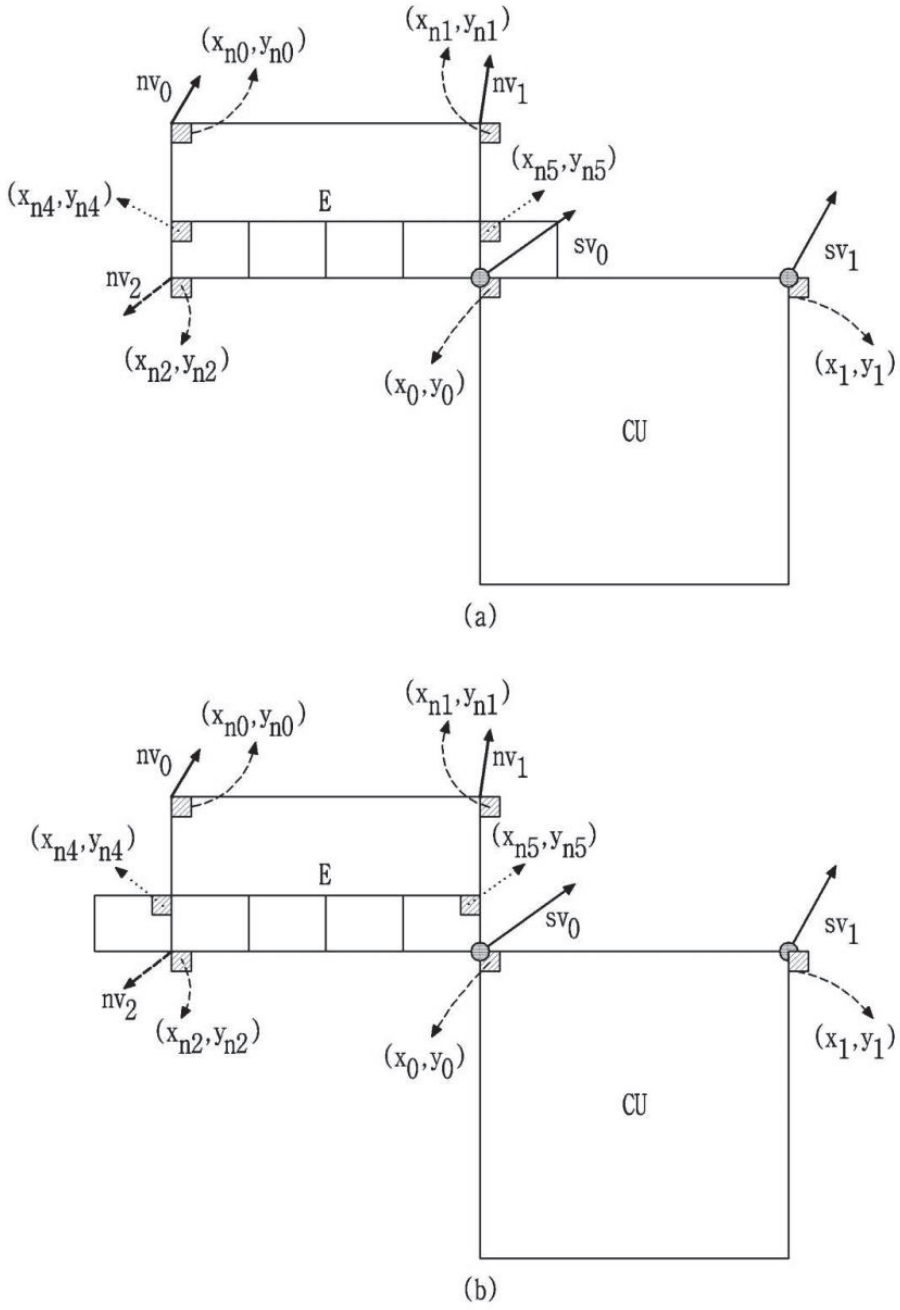
(x_{n1}, y_{n1})
(x_{n0}, y_{n0})
nv_0
nv_1
(x_{n5}, y_{n5})
(x_{n4}, y_{n4})
E
sv_0
sv_1
nv_2
(x_{n2}, y_{n2})
(x_0, y_0)
(x_1, y_1)
CU
(a)
(x_{n1}, y_{n1})
(x_{n0}, y_{n0})
nv_0
nv_1
(x_{n4}, y_{n4})
(x_{n5}, y_{n5})
E
sv_0
sv_1
nv_2
(x_{n2}, y_{n2})
(x_0, y_0)
(x_1, y_1)
CU
(b)

Fig. 14

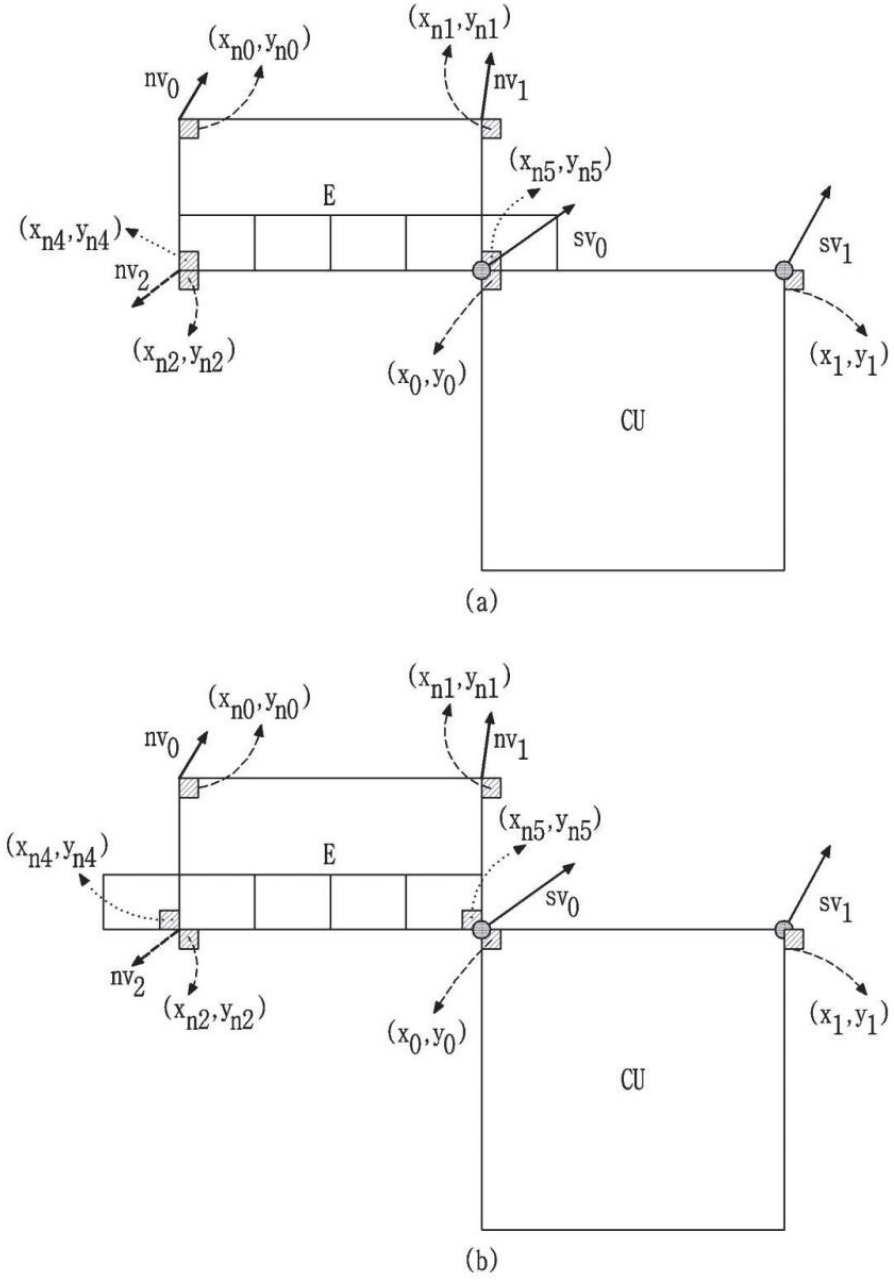
(x_{n0}, y_{n0})
(x_{n1}, y_{n1})
nv_0
nv_1
(x_{n5}, y_{n5})
E
(x_{n4}, y_{n4})
sv_0
sv_1
nv_2
(x_{n2}, y_{n2})
(x_0, y_0)
(x_1, y_1)
CU
(a)
(x_{n0}, y_{n0})
(x_{n1}, y_{n1})
nv_0
nv_1
(x_{n5}, y_{n5})
(x_{n4}, y_{n4})
E
sv_0
sv_1
nv_2
(x_{n2}, y_{n2})
(x_0, y_0)
(x_1, y_1)
CU
(b)

Fig. 15

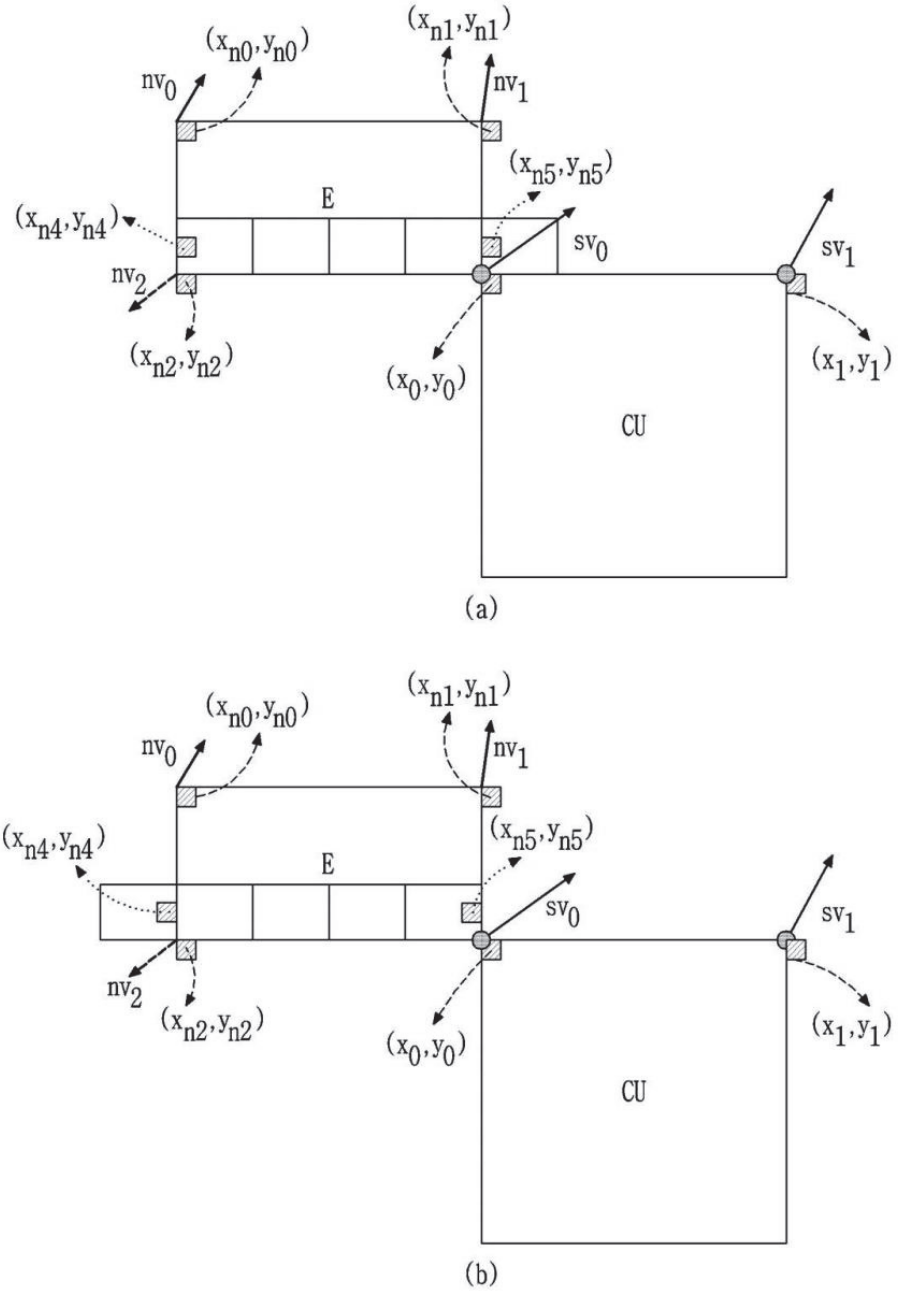
(x_n0, y_n0)
(x_n1, y_n1)
nv_0
nv_1
(x_n5, y_n5)
E
(x_n4, y_n4)
sv_0
sv_1
nv_2
(x_n2, y_n2)
(x_0, y_0)
(x_1, y_1)
CU
(a)
(x_n0, y_n0)
(x_n1, y_n1)
nv_0
nv_1
(x_n4, y_n4)
(x_n5, y_n5)
E
sv_0
sv_1
nv_2
(x_n2, y_n2)
(x_0, y_0)
(x_1, y_1)
CU
(b)

Fig. 16

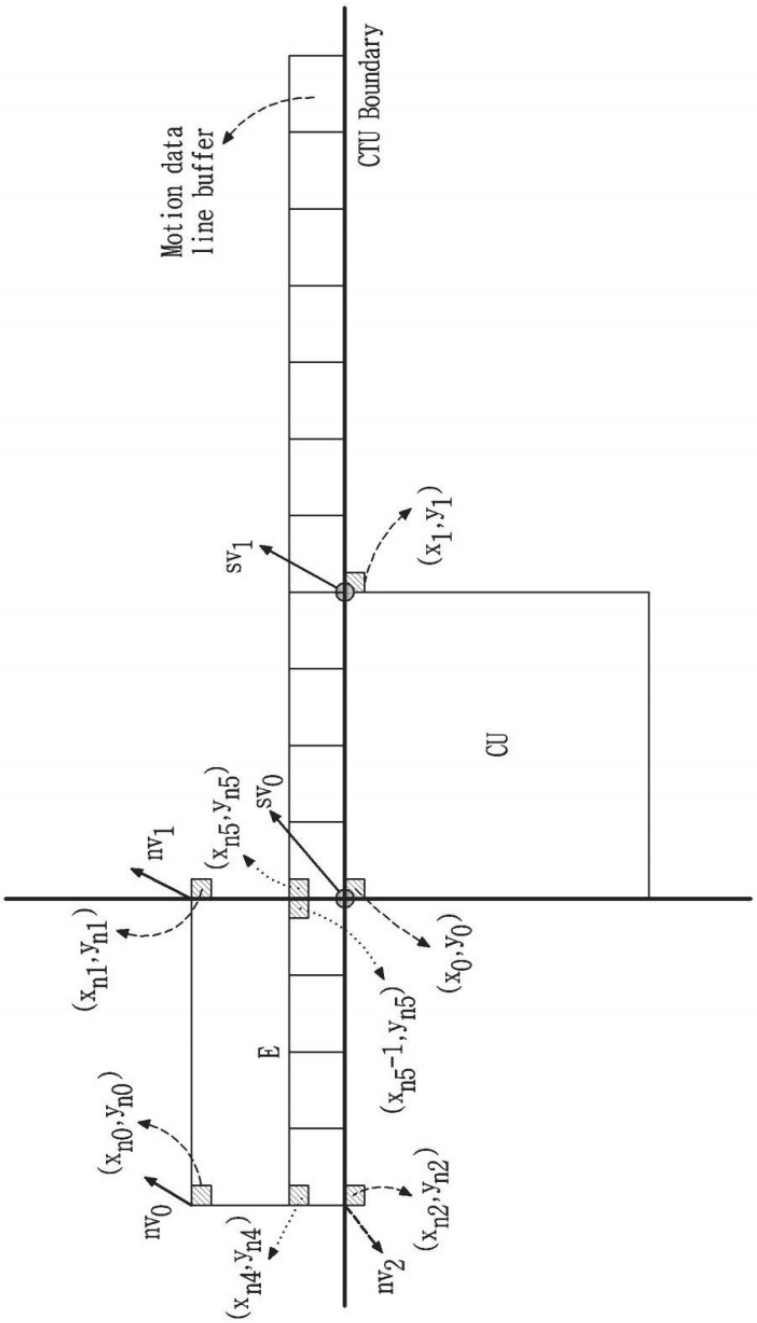
Motion data
line buffer
CTU Boundary
sv_1
(x_1, y_1)
CU
sv_0
(x_{n5}, y_{n5})
nv_1
(x_{n1}, y_{n1})
(x_0, y_0)
(x_{n5}^{-1}, y_{n5})
E
(x_{n0}, y_{n0})
nv_0
(x_{n4}, y_{n4})
(x_{n2}, y_{n2})
nv_2

Fig. 17

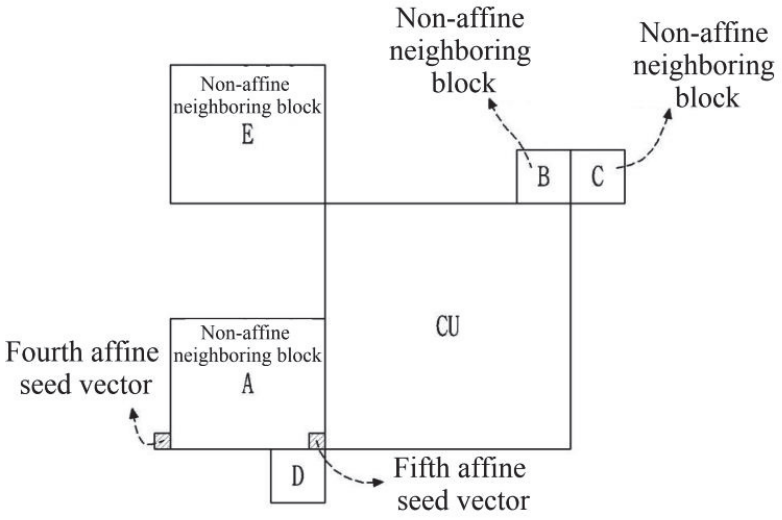

Fig. 18

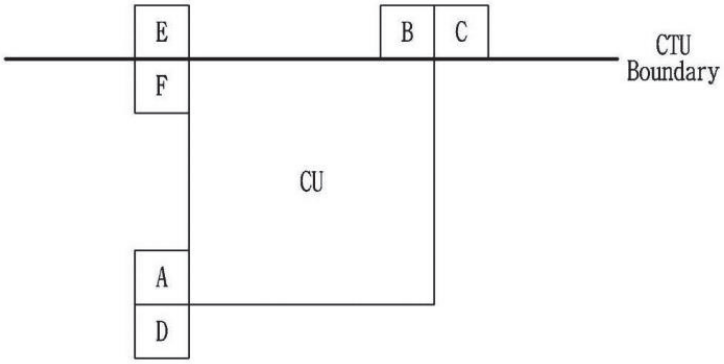

Fig. 19

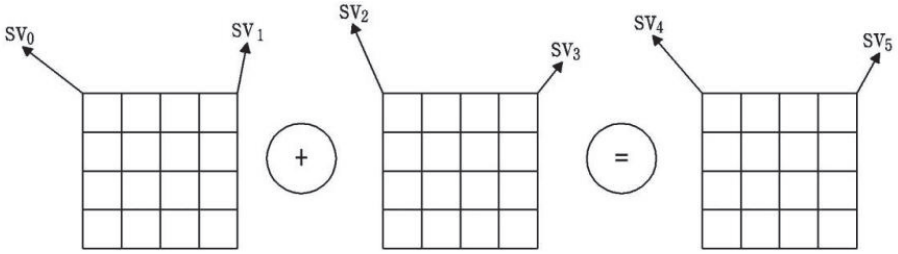

Fig. 20

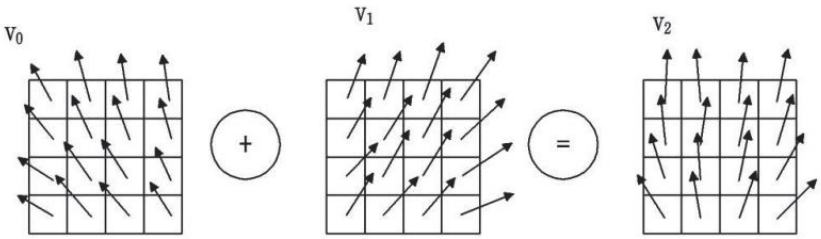

Fig. 21

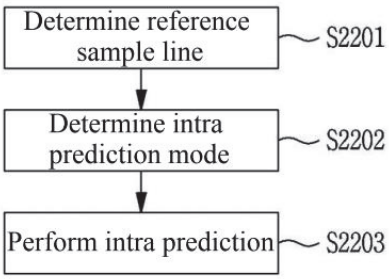

Fig. 22

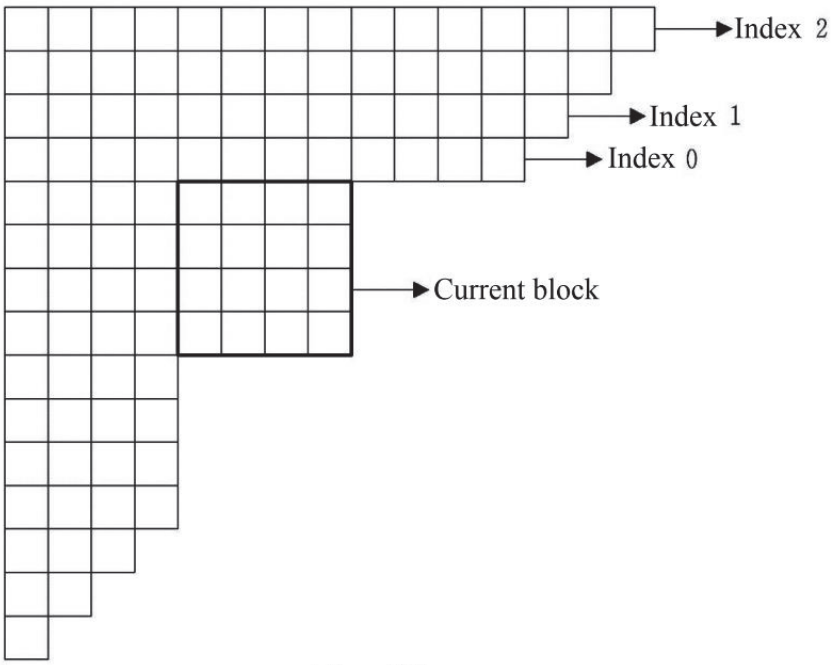

Fig. 23

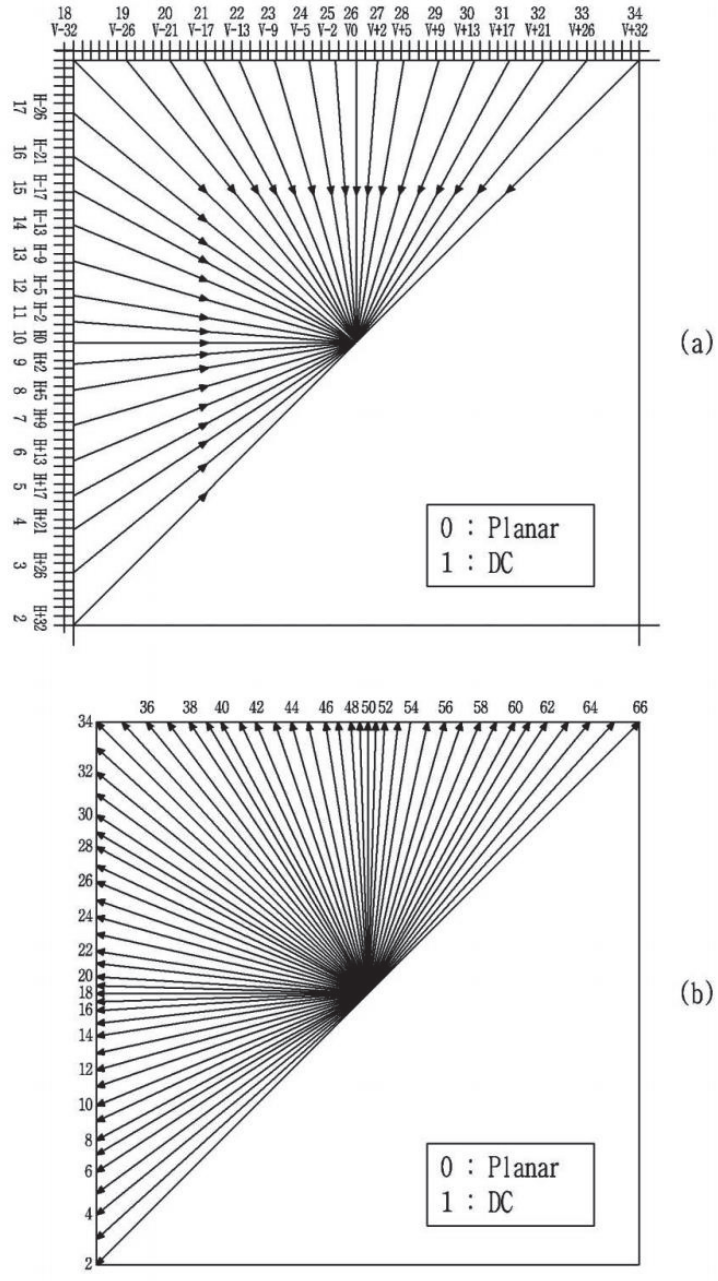
18 V-32
19 V-26
20 V-21
21 V-17
22 V-13
23 V-9
24 V-5
25 V-2
26 V0
27 V+2
28 V+5
29 V+9
30 V+13
31 V+17
32 V+21
33 V+26
34 V+32
17 H-26
16 H-21
15 H-17
14 H-13
13 H-9
12 H-5
11 H-2
10 H0
9 H+2
8 H+5
7 H+9
6 H+13
5 H+17
4 H+21
3 H+26
2 H+32
0 : Planar
1 : DC
(a)
36 38 40 42 44 46 48 50 52 54 56 58 60 62 64 66
34 32 30 28 26 24 22 20 18 16 14 12 10 8 6 4 2
0 : Planar
1 : DC
(b)

Fig. 24

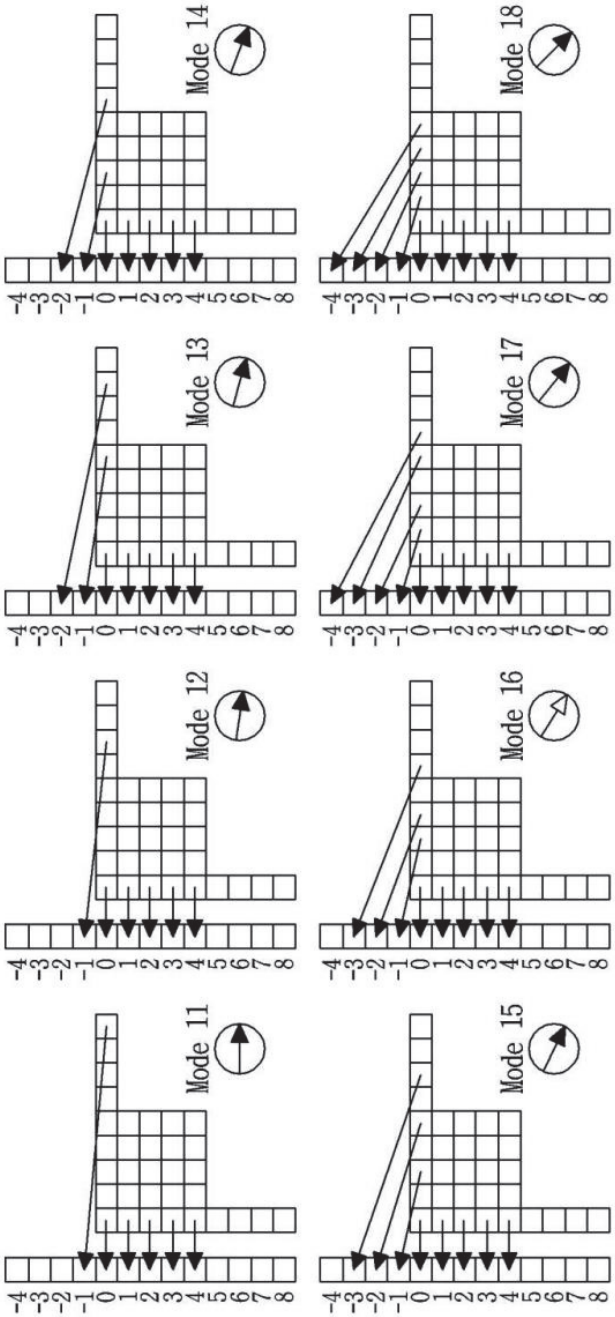

Fig. 25

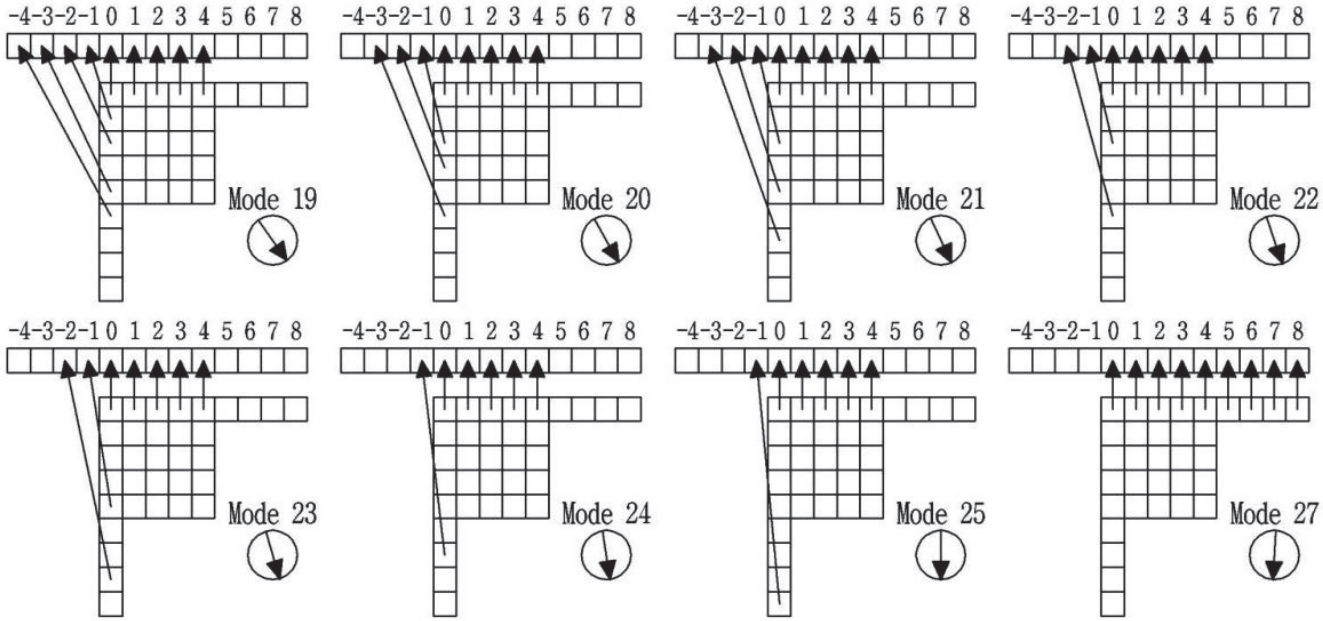
-4-3-2-1 0 1 2 3 4 5 6 7 8
Mode 19
Mode 20
Mode 21
Mode 22
Mode 23
Mode 24
Mode 25
Mode 27

Fig. 26

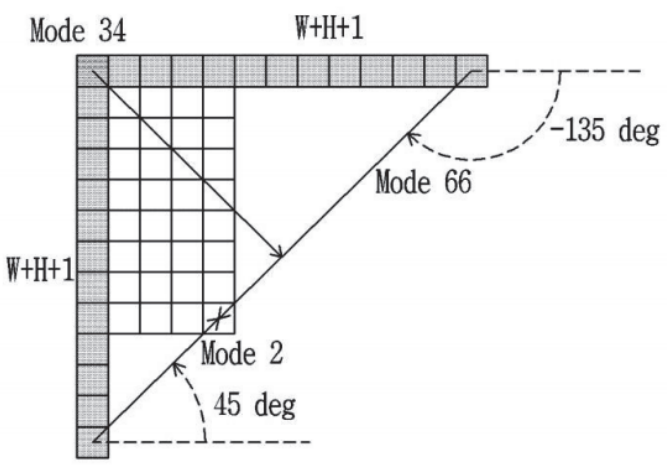

Fig. 27

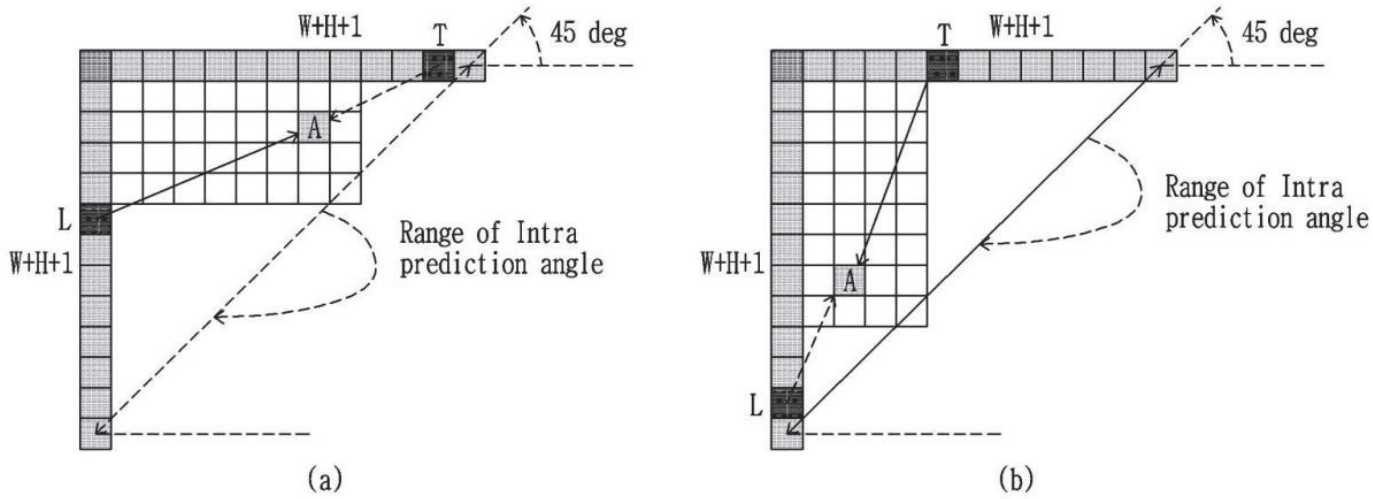
W+H+1
T
45 deg
A
L
W+H+1
Range of Intra
prediction angle
(a)
T
W+H+1
45 deg
Range of Intra
prediction angle
W+H+1
A
L
(b)

Fig. 28

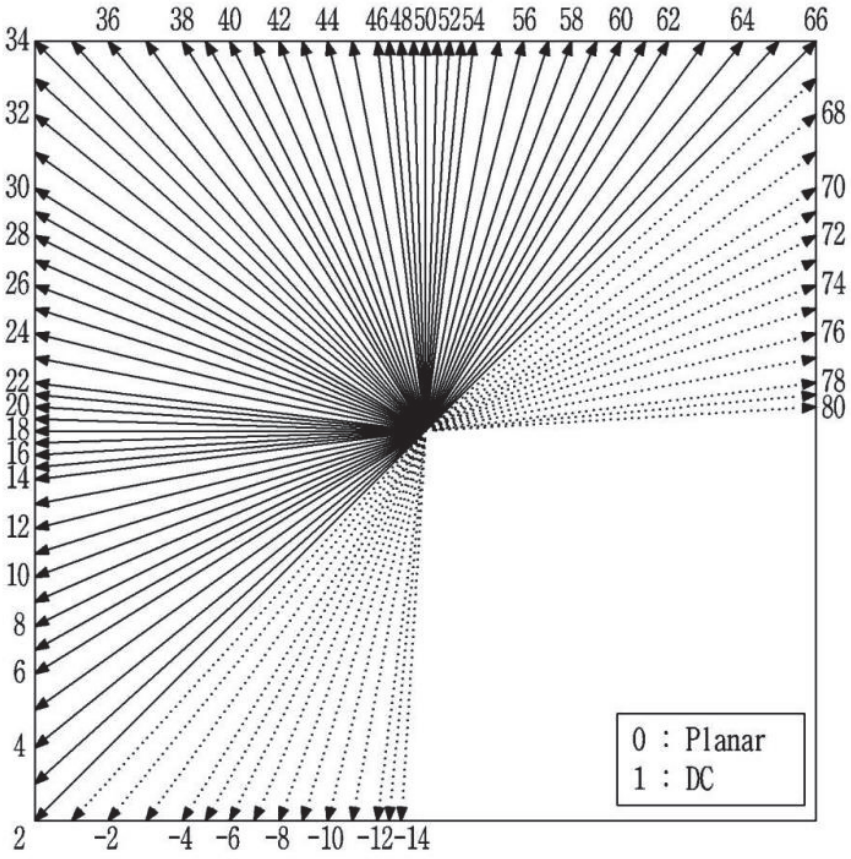
36 38 40 42 44 46 48 50 52 54 56 58 60 62 64 66
34 32 30 28 26 24 22 20 18 16 14 12 10 8 6 4 2
68 70 72 74 76 78 80
-2 -4 -6 -8 -10 -12 -14
0 : Planar
1 : DC

Fig. 29

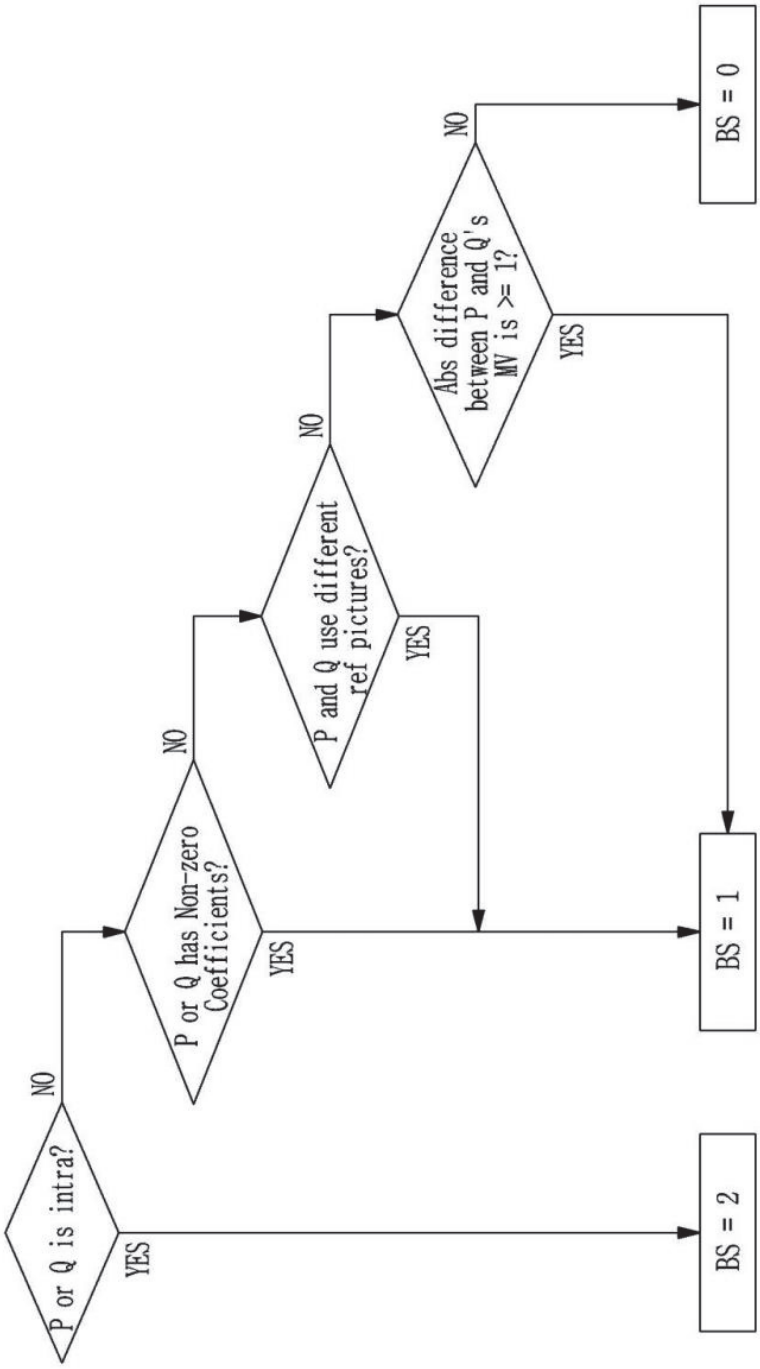
P or Q is intra?
NO
YES
BS = 2
P or Q has Non-zero Coefficients?
NO
YES
BS = 1
P and Q use different ref pictures?
NO
YES
BS = 1
Abs difference between P and Q's MV is >= 1?
NO
YES
BS = 1
BS = 0

Fig. 30

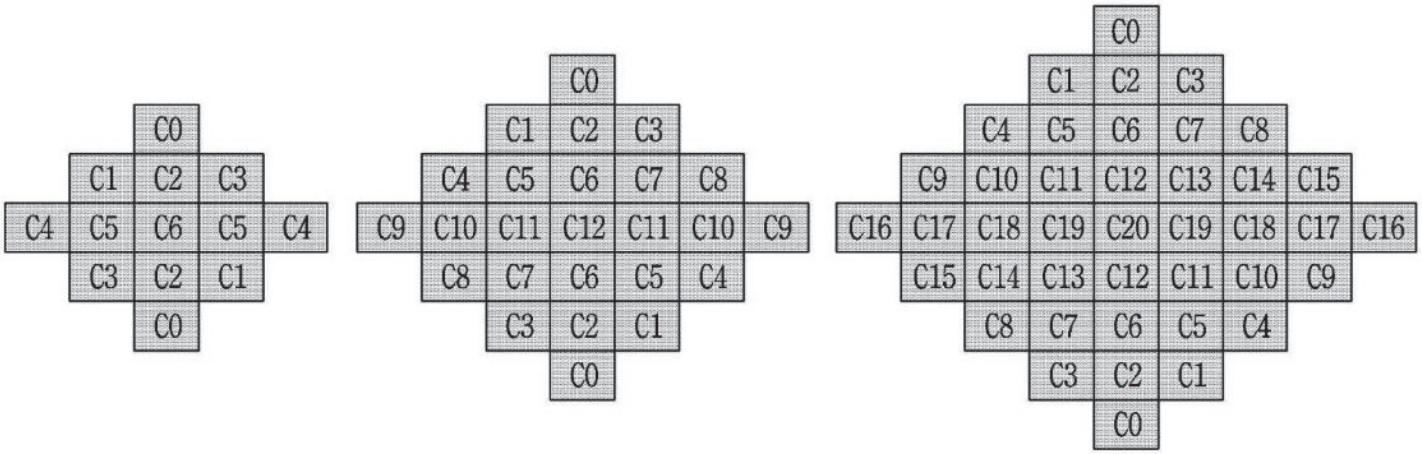
C0
C1 C2 C3
C4 C5 C6 C5 C4
C3 C2 C1
C0
C0
C1 C2 C3
C4 C5 C6 C7 C8
C9 C10 C11 C12 C11 C10 C9
C8 C7 C6 C5 C4
C3 C2 C1
C0
C0
C1 C2 C3
C4 C5 C6 C7 C8
C9 C10 C11 C12 C13 C14 C15
C16 C17 C18 C19 C20 C19 C18 C17 C16
C15 C14 C13 C12 C11 C10 C9
C8 C7 C6 C5 C4
C3 C2 C1
C0

Fig. 31

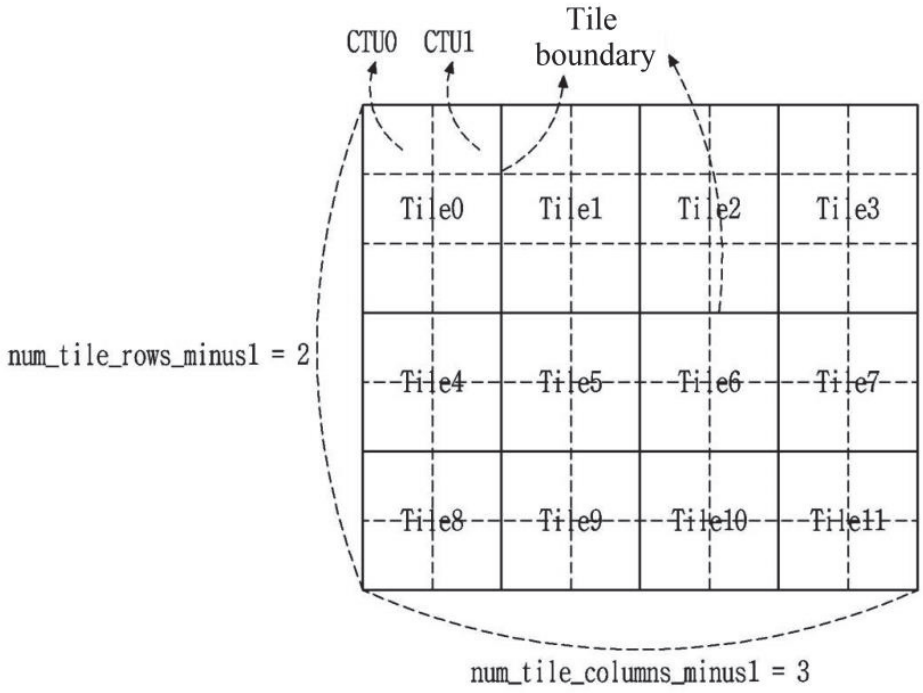
CTU0
CTU1
Tile boundary
Tile0
Tile1
Tile2
Tile3
Tile4
Tile5
Tile6
Tile7
Tile8
Tile9
Tile10
Tile11
num_tile_rows_minus1 = 2
num_tile_columns_minus1 = 3

Fig. 32

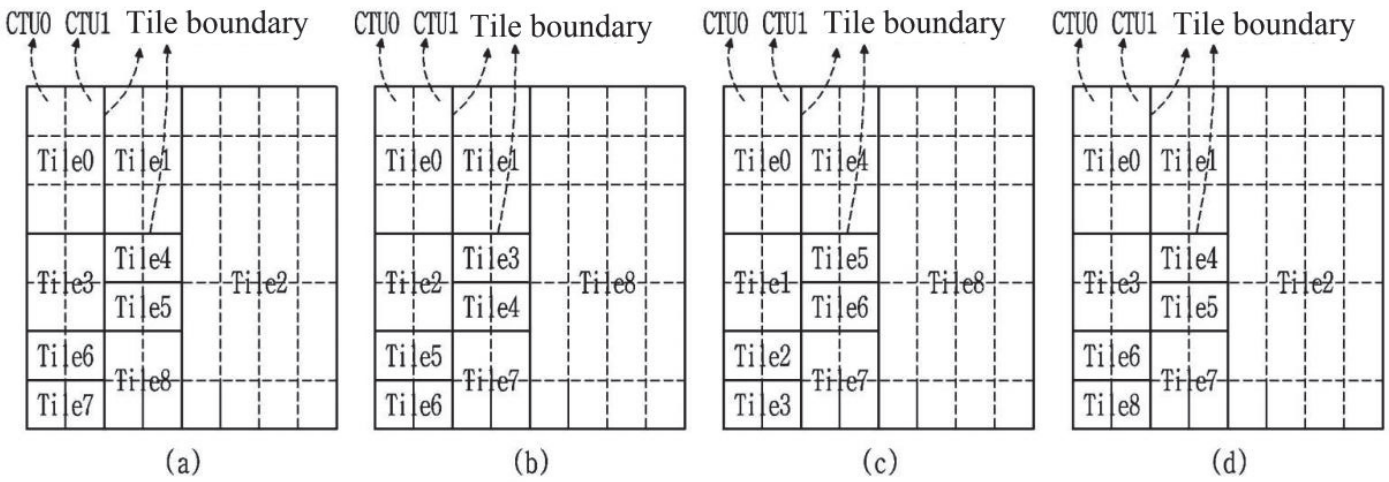
CTU0 CTU1 Tile boundary
Tile0 Tile1 Tile4 Tile3 Tile2 Tile5 Tile6 Tile8 Tile7
(a)
CTU0 CTU1 Tile boundary
Tile0 Tile1 Tile3 Tile2 Tile8 Tile4 Tile5 Tile7 Tile6
(b)
CTU0 CTU1 Tile boundary
Tile0 Tile4 Tile5 Tile1 Tile8 Tile6 Tile2 Tile7 Tile3
(c)
CTU0 CTU1 Tile boundary
Tile0 Tile1 Tile4 Tile3 Tile2 Tile5 Tile6 Tile7 Tile8
(d)

Fig. 33

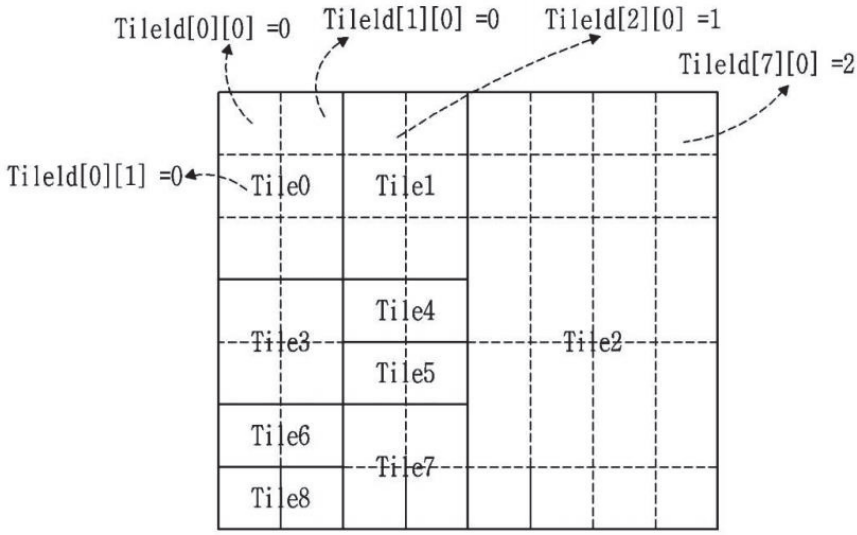
TileId[0][0] =0
TileId[1][0] =0
TileId[2][0] =1
TileId[7][0] =2
TileId[0][1] =0
Tile0
Tile1
Tile2
Tile3
Tile4
Tile5
Tile6
Tile7
Tile8

Fig. 34

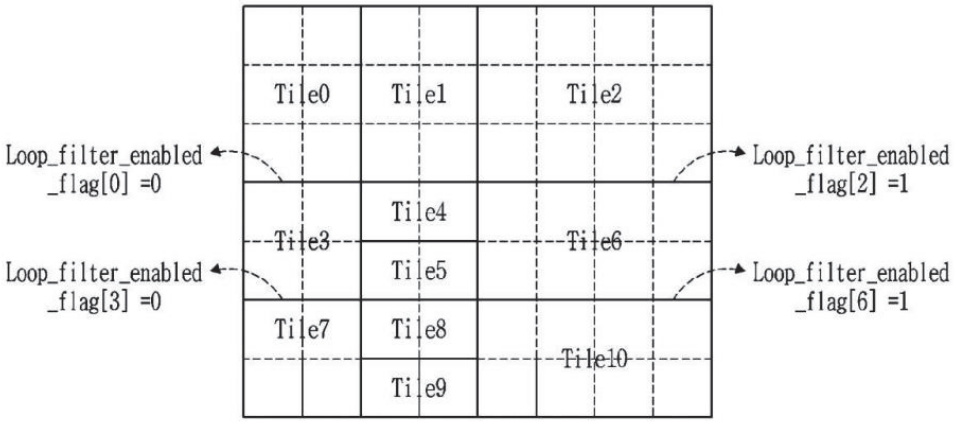
Tile0
Tile1
Tile2
Loop_filter_enabled _flag[0] =0
Loop_filter_enabled _flag[2] =1
Tile3
Tile4
Tile5
Tile6
Loop_filter_enabled _flag[3] =0
Loop_filter_enabled _flag[6] =1
Tile7
Tile8
Tile9
Tile10

Fig. 35