(12) INTERNATIONAL APPLICATION PUBLISHED UNDER THE PATENT COOPERATION TREATY (PCT)

(19) World Intellectual Property Organization
International Bureau

(43) International Publication Date
12 November 2009 (12.11.2009)

PCT

(10) International Publication Number
WO 2009/135245 A1

(51) International Patent Classification: *B41J 2/045* (2006.01)

(21) International Application Number: PCT/AU2008/000618

(22) International Filing Date: 5 May 2008 (05.05.2008)

(25) Filing Language: English

(26) Publication Language: English

(71) Applicant *(for all designated States except US)*: **SILVERBROOK RESEARCH PTY LTD** [AU/AU]; 393 Darling Street, Balmain, New South Wales 2041 (AU).

(72) Inventors; and
(75) Inventors/Applicants *(for US only)*: **MCAVOY, Gregory John** [IE/IE]; 393 Darling Street, Balmain, New South Wales 2041 (AU). **BAGNAT, Misty** [AU/AU]; 393 Darling Street, Balmain, New South Wales 2041 (AU). **LAWLOR, Vincent Patrick** [IE/AU]; 393 Darling Street, Balmain, New South Wales 2041 (AU). **SILVERBROOK, Kia** [AU/AU]; 393 Darling Street, Balmain, New South Wales 2041 (AU).

(74) Agent: **SILVERBROOK RESEARCH PTY LTD**; 393 Darling Street, Balmain, New South Wales 2041 (AU).

(81) Designated States *(unless otherwise indicated, for every kind of national protection available)*: AE, AG, AL, AM, AO, AT, AU, AZ, BA, BB, BG, BH, BR, BW, BY, BZ, CA, CH, CN, CO, CR, CU, CZ, DE, DK, DM, DO, DZ, EC, EE, EG, ES, FI, GB, GD, GE, GH, GM, GT, HN, HR, HU, ID, IL, IN, IS, JP, KE, KG, KM, KN, KP, KR, KZ, LA, LC, LK, LR, LS, LT, LU, LY, MA, MD, ME, MG, MK, MN, MW, MX, MY, MZ, NA, NG, NI, NO, NZ, OM, PG, PH, PL, PT, RO, RS, RU, SC, SD, SE, SG, SK, SL, SM, SV, SY, TJ, TM, TN, TR, TT, TZ, UA, UG, US, UZ, VC, VN, ZA, ZM, ZW.

(84) Designated States *(unless otherwise indicated, for every kind of regional protection available)*: ARIPO (BW, GH, GM, KE, LS, MW, MZ, NA, SD, SL, SZ, TZ, UG, ZM, ZW), Eurasian (AM, AZ, BY, KG, KZ, MD, RU, TJ, TM), European (AT, BE, BG, CH, CY, CZ, DE, DK, EE, ES, FI, FR, GB, GR, HR, HU, IE, IS, IT, LT, LU, LV, MC, MT, NL, NO, PL, PT, RO, SE, SI, SK, TR), OAPI (BF, BJ, CF, CG, CI, CM, GA, GN, GQ, GW, ML, MR, NE, SN, TD, TG).

[Continued on next page]

(54) Title: THERMAL BEND ACTUATOR COMPRISING BENT ACTIVE BEAM HAVING RESISTIVE HEATING BARS

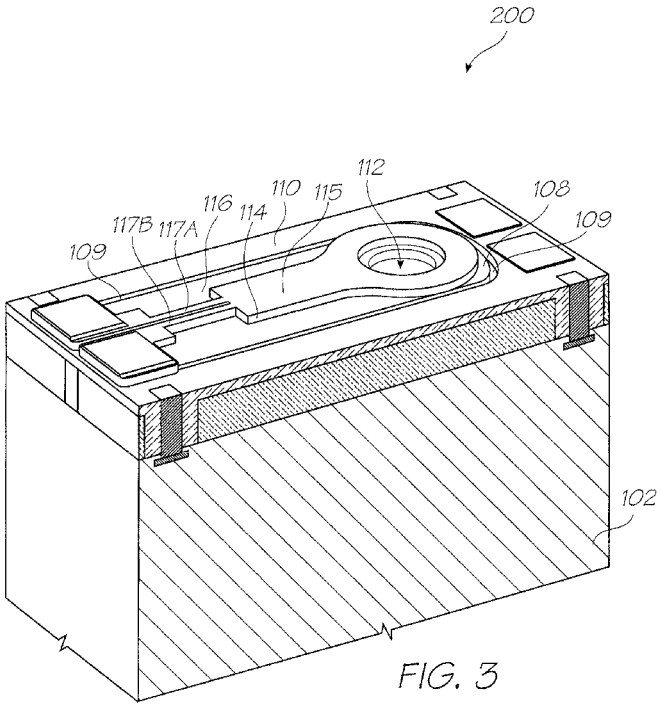

FIG. 3

(57) Abstract: A thermal bend actuator comprising: (a) a pair of electrical contacts positioned at one end of the actuator; (b) an active beam connected to the electrical contacts and extending longitudinally away from the contacts, the active beam defining a bent current flow path between the contacts; and (c) a passive beam fused to the active beam. When a current is passed through the active beam, the active beam heats and expands relative to the passive beam, resulting in bending of the actuator. The active beam comprises a resistive heating bar having a relatively smaller cross-sectional area than any other part of the current flow path. Heating of the active beam is concentrated in the heating bar.

WO 2009/135245 A1

Published:

— *with international search report (Art. 21(3))*