(12) INTERNATIONAL APPLICATION PUBLISHED UNDER THE PATENT COOPERATION TREATY (PCT)

(19) World Intellectual Property Organization
International Bureau

(43) International Publication Date
18 November 2021 (18.11.2021)

WIPO | PCT

(10) International Publication Number
WO 2021/228941 A1

(51) International Patent Classification:
B60N 2/28 (2006.01)

(21) International Application Number:
PCT/EP2021/062629

(22) International Filing Date:
12 May 2021 (12.05.2021)

(25) Filing Language: English

(26) Publication Language: English

(30) Priority Data:
202010406407.X 14 May 2020 (14.05.2020) CN

(71) Applicant: **BAMBINO PREZIOSO SWITZERLAND AG** [CH/CH]; Beim Bahnhof 5, 6312 Steinhausen (CH).

(72) Inventor: **CHEN, Yingzhong**; Yin He Industrial Zone, Qing Xi Town, Dongguan, Guangdong 523000 (CN).

(74) Agent: **HOEFER & PARTNER PATENTANWÄLTE MBB**; Pilgersheimer Str. 20, 81543 München (DE).

(81) Designated States *(unless otherwise indicated, for every kind of national protection available)*: AE, AG, AL, AM, AO, AT, AU, AZ, BA, BB, BG, BH, BN, BR, BW, BY, BZ, CA, CH, CL, CN, CO, CR, CU, CZ, DE, DJ, DK, DM, DO, DZ, EC, EE, EG, ES, FI, GB, GD, GE, GH, GM, GT, HN, HR, HU, ID, IL, IN, IR, IS, IT, JO, JP, KE, KG, KH, KN, KP, KR, KW, KZ, LA, LC, LK, LR, LS, LU, LY, MA, MD, ME, MG, MK, MN, MW, MX, MY, MZ, NA, NG, NI, NO, NZ, OM, PA, PE, PG, PH, PL, PT, QA, RO, RS, RU, RW, SA, SC, SD, SE, SG, SK, SL, ST, SV, SY, TH, TJ, TM, TN, TR, TT, TZ, UA, UG, US, UZ, VC, VN, WS, ZA, ZM, ZW.

(84) Designated States *(unless otherwise indicated, for every kind of regional protection available)*: ARIPO (BW, GH, GM, KE, LR, LS, MW, MZ, NA, RW, SD, SL, ST, SZ, TZ, UG, ZM, ZW), Eurasian (AM, AZ, BY, KG, KZ, RU, TJ, TM), European (AL, AT, BE, BG, CH, CY, CZ, DE, DK, EE, ES, FI, FR, GB, GR, HR, HU, IE, IS, IT, LT, LU, LV, MC, MK, MT, NL, NO, PL, PT, RO, RS, SE, SI, SK, SM, TR), OAPI (BF, BJ, CF, CG, CI, CM, GA, GN, GQ, GW, KM, ML, MR, NE, SN, TD, TG).

Published:
— *with international search report (Art. 21(3))*

(54) **Title:** CARRYCOT TO BE DETACHABLY MOUNTED ON A BASE BEING DISMOUNTABLY ATTACHED IN A VEHICLE OR ON A STROLLER FRAME

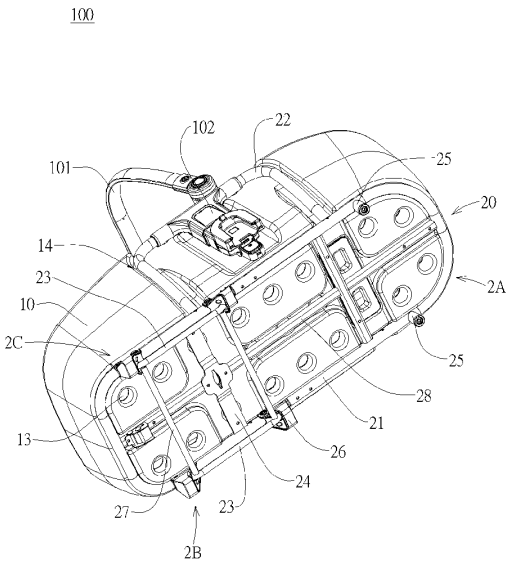

FIG. 3

(57) **Abstract:** A carrycot (100) is provided and includes a carrycot body (10) and a mounting bracket (20). The carrycot body (10) is for accommodating a child and further for a harness to pass therethrough. The mounting bracket (20) is disposed on an outer surface of the carrycot body (10) and includes a bracket body (2A), an engaging component (23) and a mounting assembly (24). The engaging component (23) is for positioning the carrycot (100). The mounting assembly (24) is for the harness to be coupled to. The harness is coupled to the mounting assembly (24) and passes through the carrycot body (10) to stretch into an interior of the carrycot body (10) for achieving an installation of the harness. Furthermore, the carrycot may be detachably mounted on a base (200) being dismountably attached in a vehicle or on a stroller frame.

WO 2021/228941 A1